Prescriptive Deck Details

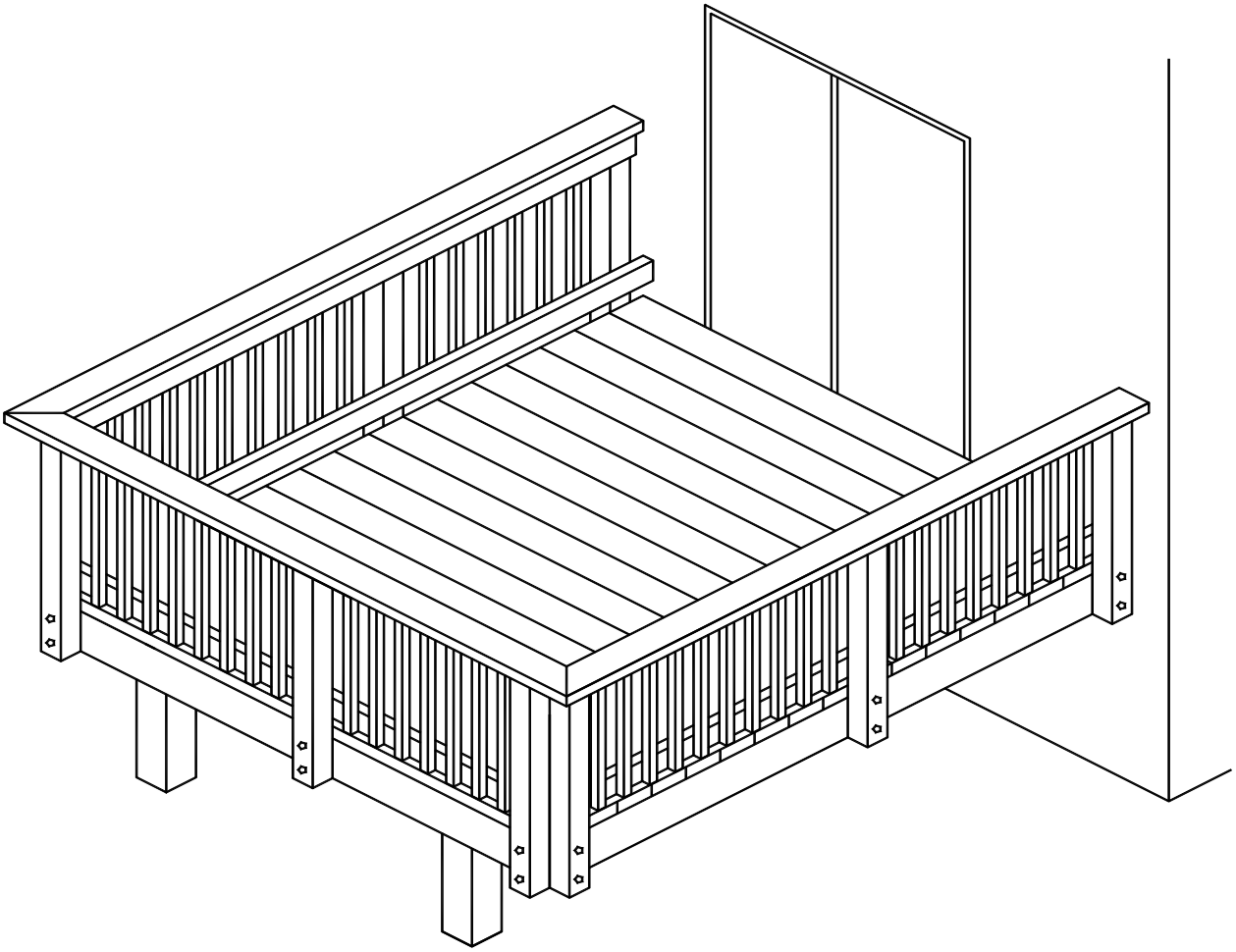

This design document applies to <u>single-span</u>, <u>single-level</u>, <u>residential decks</u> only. Decks must be constructed in conformance with the details contained herein, and with the 2018 International Residential Code (IRC).

The content of this document, originally provided by the Georgia Department of Community Affairs (DCA) following the adoption of the 2012 International Residential Code (IRC), is a guide for residential deck design recommended by the City of Chamblee, GA, Planning and Development Department. See the 2018 International Residential Code (IRC), Chapter 5, for the official language governing the construction of residential decks.

CONTENTS

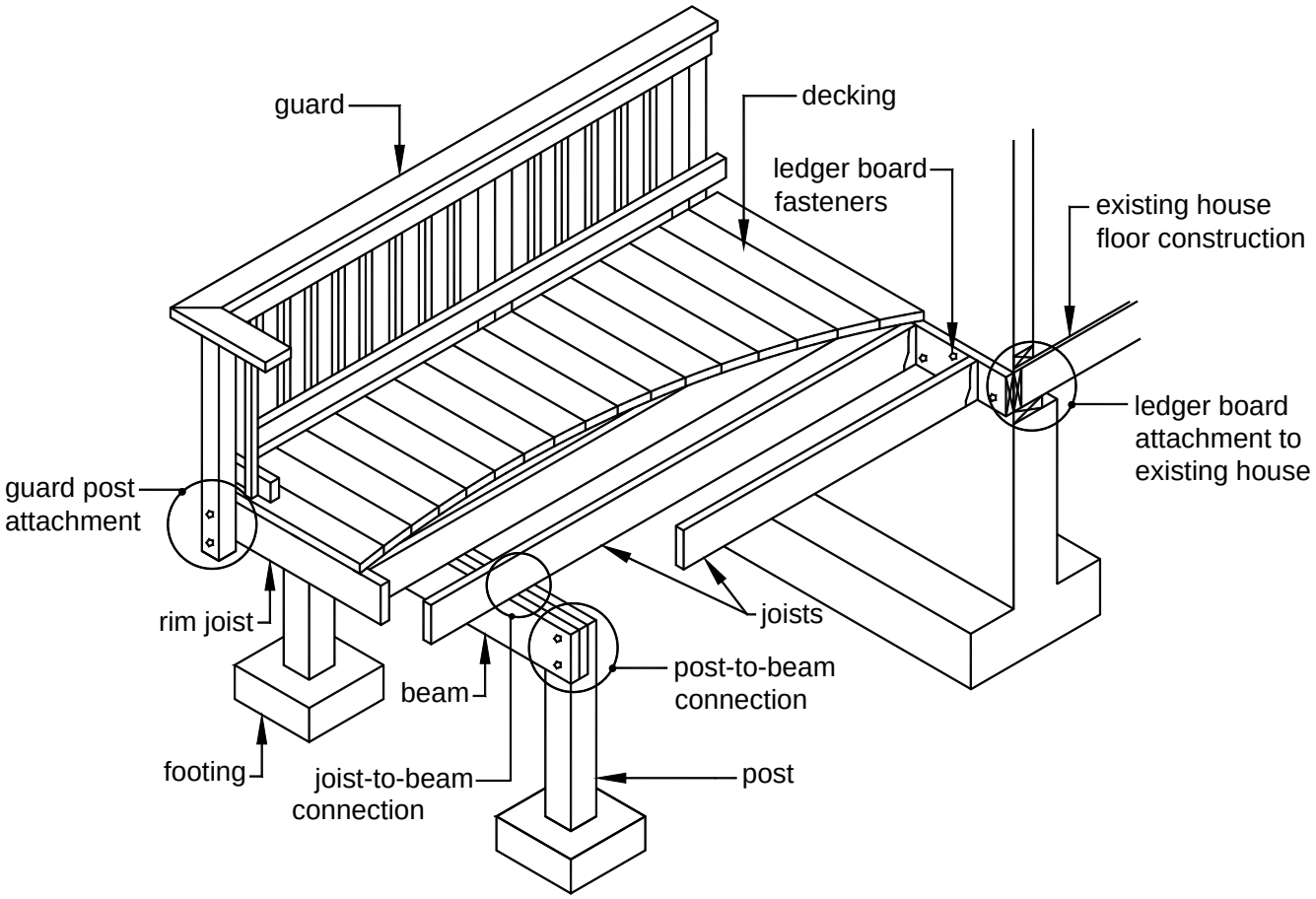

General Requirements 3
Decking 3
Joists 4
Beams 5
Deck Plan 6
Joist-to-Beam Connection 7
Joist Hangers 7
Posts 7
Footings 8
Ledger Attachments 9
Prohibited Ledger Attachments 11
Ledger Board Fasteners 11
Framing at Chimney or Bay Window 12
Lateral Support 12
Free-Standing Decks 14
Guards 14
Guard Post Attachments 15
Stair 16
Safety Glazing 22

GENERAL REQUIREMENTS

1. Lumber shall be naturally durable wood or shall be southern pine, grade #2 or better that is pressure-preservative-treated in accordance with AWPA U1 for the species, product, preservative and end use. Field cut ends, notches and drilled holes of preservative treated wood shall be treated in the field in accordance with AWPA M4. Preservative- treated lumber in contact with the ground shall be rated as "ground-contact." **Please note: not all treated lumber is rated for ground contact.**
2. Wood-plastic composites are composed of bound wood and plastic fibers creating material that can be used as decking and guard elements as permitted herein. Permissible wood-plastic composites must bear a label indicating its performance criteria and compliance with ASTM D 7032.
3. Nails shall be ring-shanked or annular grooved.
4. Screws and nails shall be hot-dipped galvanized, stainless steel or approved for use with pressure treated lumber.
5. Hardware, e.g., joist hangers, cast-in-place post anchors, mechanical fasteners, shall be galvanized with 1.85 oz/sf of zinc (G-185 coating) or shall be stainless steel. Use products such as "Zmax" from Simpson Strong-Tie or "Triple Zinc" and "Gold Coat" from USP.
6. Electrical receptacles for decks shall comply with the currently approved edition of the National Electrical Code.
7. Lighting for decks and exterior stairs shall comply with IRC 303.7 Stairway Illumination.
8. Decks constructed in accordance with these details are not approved for privacy screens, planters, built-in seating or hot tub installations.

DECKING

Approved Material

Wood and wood-plastic composite decking shall be installed in accordance with the requirements below.

- Dimensions shall be 2x6 or $^5/_4$ ("five-quarter") for wood and per manufacturer for wood-plastic composites.
- Wood decking may be placed at an angle of 45 to 90 degrees to the joists.
- Attach wood decking in accordance with FIGURE 1.
- Placement and attachment of wood-plastic composites shall be per manufacturer's instructions.

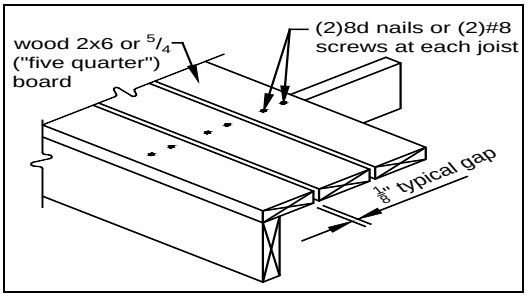

FIGURE 1: TYPICAL DECKING

- Wood-plastic composite label and manufacturer's instructions must be left on the jobsite for inspector verification.

Plastic Decking

Plastic or PVC decking, not considered a wood-plastic composite, may be substituted only when the product has a valid evaluation report from an accredited listing agency and is capable of resisting a live load of 40 PSF. Installation shall be in conformance to the evaluation report and the manufacturer's installation instructions which must be available to the inspector.

JOISTS

Joists shall be designed in accordance with the requirements below.

- Joist span is measured between the centerline of bearing at each end of the joist and does not include the overhangs.
- See FIGURE 2 through FIGURE 4 for joist span types.
- Use TABLE 1 to determine your joist size based on span length and spacing.
- The maximum overhang is equal to one-fourth of the length of the joist span (0.25 x joist span).
- Attach rim joist to end of joists as shown in FIGURE 2 and FIGURE 4.

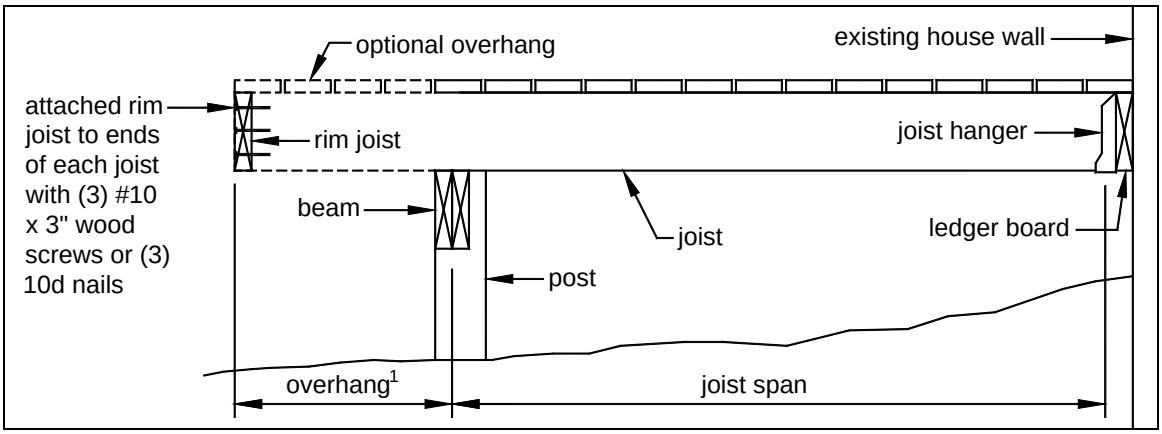

FIGURE 2: JOIST SPAN WITH OVERHANG - DECK ATTACHED AT HOUSE

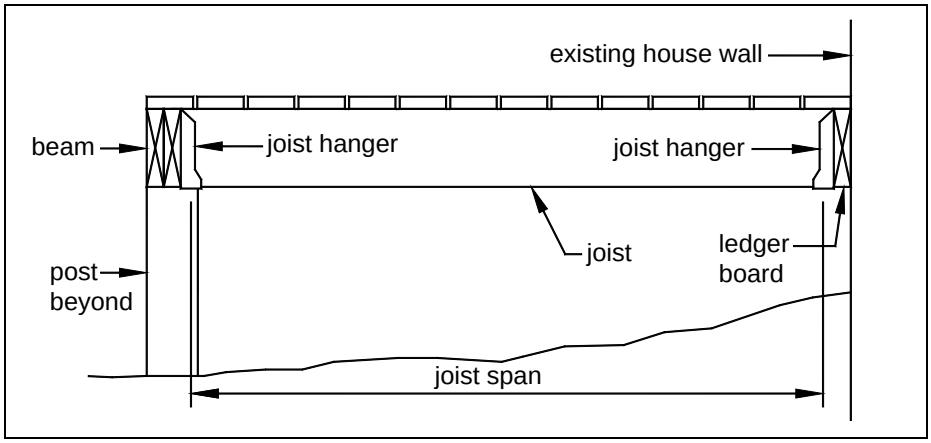

FIGURE 3: JOIST SPAN - JOISTS ATTACHED TO SIDE OF BEAM

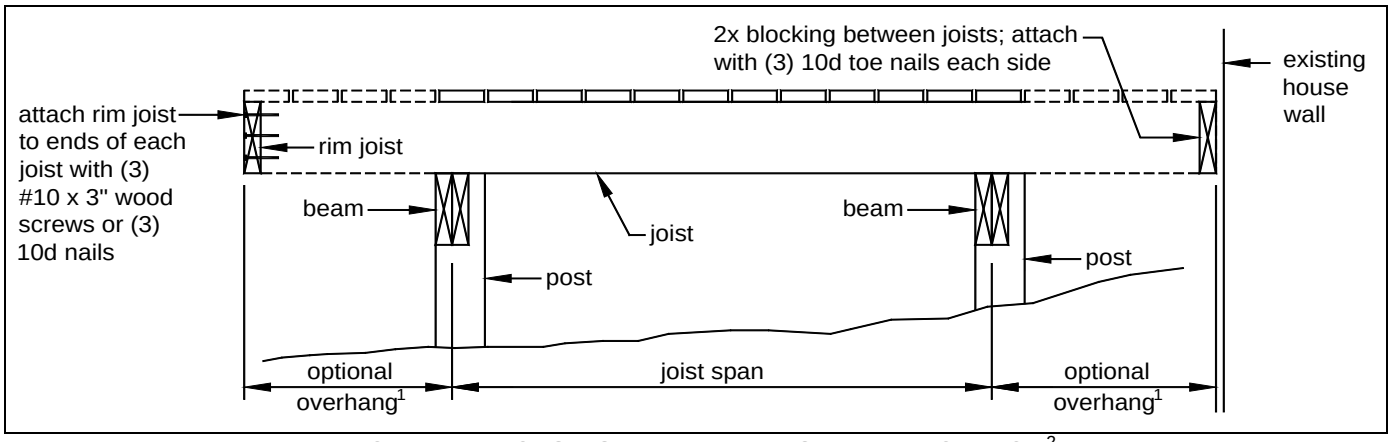

FIGURE 4: JOIST SPAN - FREE-STANDING DECK[2]

[1] The maximum length of the overhang is equal to one-fourth of the joist span length (0.25 x joist span).

[2] For more information on *Free-Standing Decks*, see Sheet 14.

TABLE 1: MAXIMUM JOIST SPAN LENGTH[1]

Joists without Overhangs

Joist Spacing→ Joist Size↓	12"	16"	24"
2x8	13'-8"	12'-5"	10'-2"
2x10	17'-5"	15'-10"	13'-1"
2x12	18'-0"	18'-0"	15'-5"

Joists with Overhangs

Joist Spacing→ Joist Size↓	12"	16"	24"
2x8	10'-6"	10'-6"	10'-2"
2x10	15'-2"	15'-2"	13'-1"
2x12	18'-0"	18'-0"	15'-5"

[1] Spans are based on 40 PSF live load, 10 PSF dead load, southern pine #2, normal loading duration, wet service conditions and deflections of $\Delta=\ell/360$ for main span and $\ell/180$ for overhang.

BEAMS

Beams shall be designed and assembled in accordance with the requirements below.

- As shown in FIGURE 5, beam span is measured between the centerlines of two adjacent posts.
- Beam size is determined using TABLE 2.
- Beams may overhang each end up to one-fourth of the beam span (0.25 x beam span) as shown in FIGURE 5.
- Using the members identified in TABLE 2, beams shall be assembled in accordance with FIGURE 6.
- Beam splices shall be located over interior post locations only.

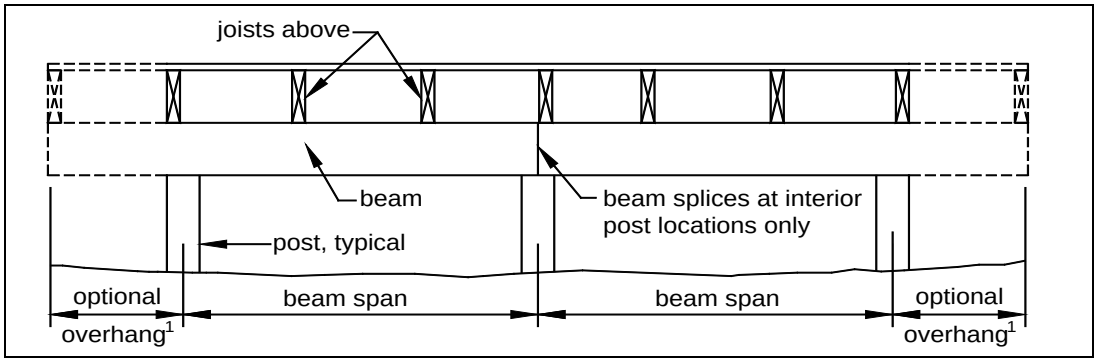

FIGURE 5: BEAM SPAN TYPES

[1] The maximum length of the overhang is equal to one-fourth of the beam span length (0.25 x beam span).

TABLE 2: MAXIMUM BEAM SPAN LENGTH[1]

Beam Size→ Joist Span↓	(2)2x6	(2)2x8	(2)2x10	(2)2x12	(3)2x6	(3)2x8	(3)2x10	(3)2x12
≤ 6'	7'-1"	9'-2"	11'-10"	13'-11"	8'-7"	11'-4"	14'-5"	17'-5"
> 6' - 8'	6'-2"	7'-11"	10'-3"	12'-0"	7'-8"	9'-11"	12'-10"	15'-1"
> 8' - 10'	5'-6"	7'-1"	9'-2"	10'-9"	6'-11"	8'-11"	11'-6"	13'-6"
> 10' - 12'	5'-0"	6'-6"	8'-5"	9'-10"	6'-3"	8'-1"	10'-6"	12'-4"
> 12' - 14'	4'-8"	6'-0"	7'-9"	9'-1"	5'-10"	7'-6"	9'-9"	11'-5"
> 14' - 16'	4'-4"	5'-7"	7'-3"	8'-6"	5'-5"	7'-0"	9'-1"	10'-8"
> 16' - 18'	4'-1"	5'-3"	6'-10"	8'-0"	5'-2"	6'-7"	8'-7"	10'-1"

[1] Spans are based on 40 PSF live load, 10 PSF dead load, southern pine #2, normal loading duration, wet service conditions and deflections of $\Delta=\ell/360$ for main span and $\ell/180$ for overhang with a 230 lb. point load.

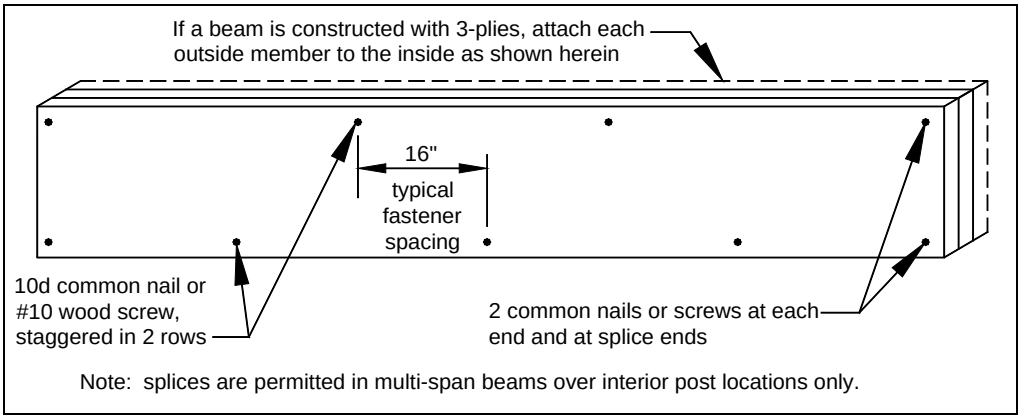

FIGURE 6: BEAM ASSEMBLY DETAIL

DECK PLAN

Length to Width Ratio

For decks attached to the existing house only, the ratio of the overall deck length, L, to the overall deck width, W, must be no more than 2 to 1 as shown in FIGURE 7. This requirement can also be verified by ensuring L ÷ W ≤ 2.

Complete Your Deck

A framing plan shows a bird's-eye view of the joist and beam layout; the location of the ledger board, diagonal bracing, posts and footings, and the type, size and spacing of the ledger board fasteners. Use the sample typical deck framing plan shown in FIGURE 7 below and the requirements herein to complete your deck.

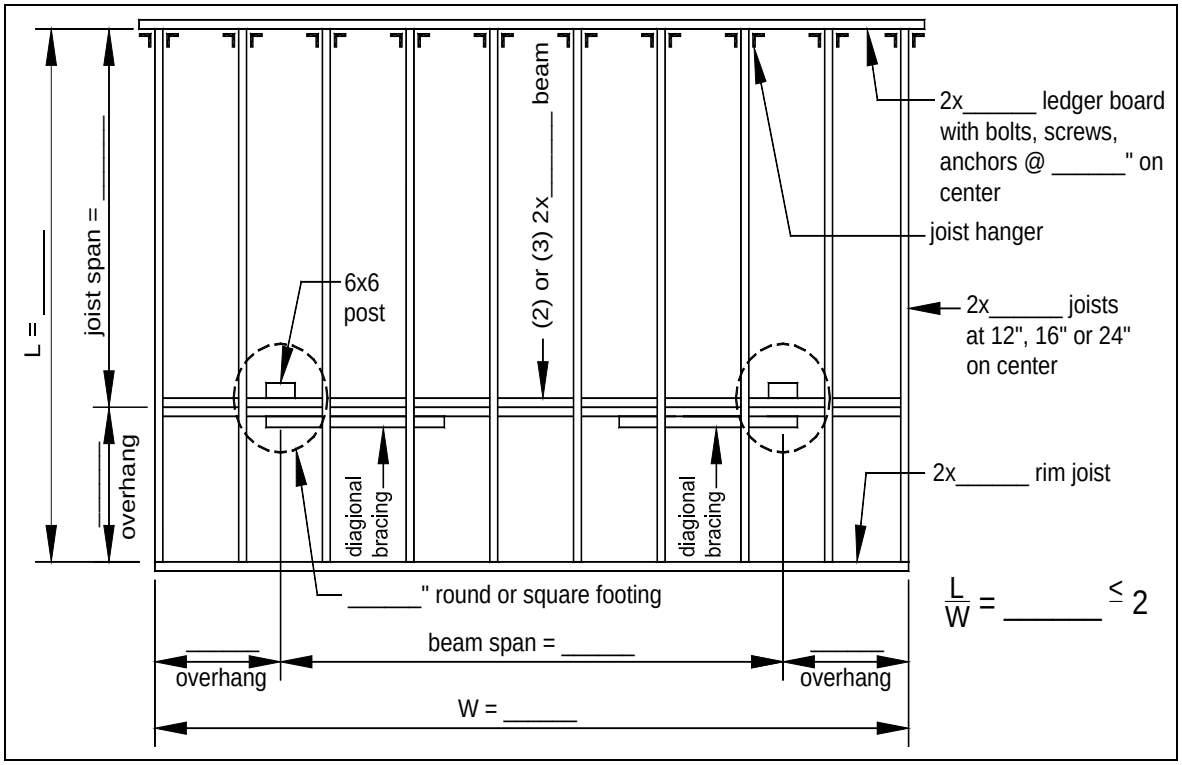

FIGURE 7: TYPICAL DECK FRAMING PLAN

JOIST-TO-BEAM CONNECTION

Each joist shall be attached to the beam as shown in FIGURE 8. Use Option 1 or Option 2 when joists bear on or overhang past the beam as shown in FIGURE 2 and FIGURE 4. Use Option 3 when joists attach to the side of the beam as shown in FIGURE 3; however, the joist depth must be less than or equal in depth to the beam depth. See *Joist Hangers* below for information on hanger requirements. Mechanical fasteners or hurricane clips used in Option 2 shall have a minimum capacity of 100 lbs. in both uplift and lateral load directions. See manufacturer's instructions for minimum installation requirements.

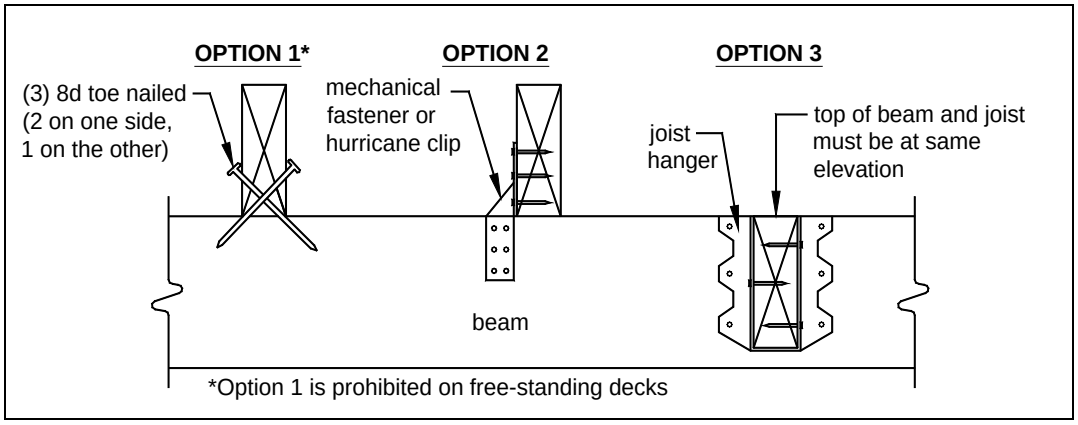

FIGURE 8: JOIST-TO-BEAM DETAIL

JOIST HANGERS

Joist hangers, as shown in FIGURE 9, shall have a minimum capacity of 600 lbs. for 2x8s, 700 lbs. for 2x10s and 800 lbs. for 2x12s. The joist hanger shall be designed and manufactured for the number of plies it is carrying.

Use joist hangers with inside flanges when clearances to the edge of the beam or ledger board dictate.

Do not use clip angles or brackets to support framing members. Do not bend hanger flanges to accommodate field conditions.

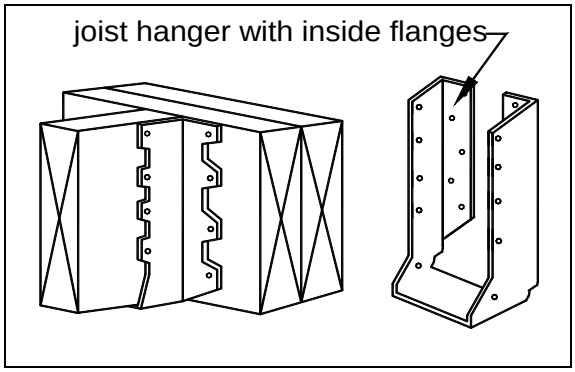

FIGURE 9: TYPICAL JOIST HANGERS

POSTS

Deck posts shall be 6x6 with a maximum height of 14'-0" measured from the top of the footing to the underside of the beam. The beam shall be attached to the post by one of the methods shown in FIGURE 11. The attachment condition shown in FIGURE 10 is prohibited.

The post cap shown in FIGURE 11, Option 2 shall be specifically designed for two- or three-ply beams and 6x6 posts with a minimum downward allowable load capacity of 5,000 lbs. Attachment shall be per manufacturer's instructions. Post caps shall be galvanized per the requirements noted on Sheet 3. 4x4 & 4x6 posts can be used if tributary loading values are calculated by a design professional.

Cut ends of posts shall be field treated with a wood preservative containing copper naphthenate in accordance with AWPA M4. Such products can be found in the paint department of most hardware or home center stores.

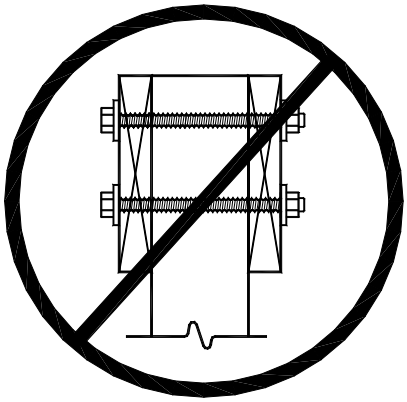

FIGURE 10: PROHIBITED POST-TO-BEAM ATTACHMENT

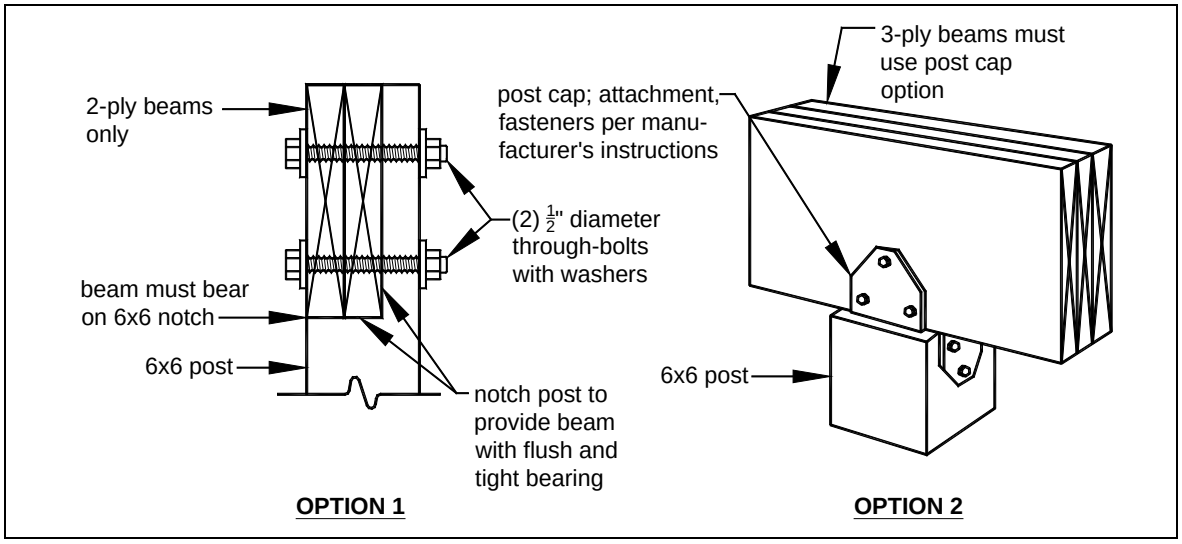

FIGURE 11: POST-TO-BEAM CONNECTION OPTIONS

FOOTINGS

Footings shall be constructed in accordance with the requirements below.

- Concrete shall be air-entrained and have a minimum compressive strength of 3,000 PSI.
- Footing size and thickness shall be in accordance with TABLE 3.
- See FIGURE 12 for post attachment options and requirements.
- Post anchors shall be galvanized per the requirements noted on Sheet 3.
- Footings shall bear on solid ground; bearing conditions must be verified by county inspectors prior to placement of concrete.
- Bottom of footing should be at least 12 inches below grade.
- **Deck footings closer than 5'-0" to an existing exterior house wall must bear at the same elevation as the existing house footings.**
- **Do not construct footings over utility lines or service pipe. Call 811 before you dig.**

TABLE 3: FOOTING SIZE

Beam Span	Joist Span	Size of Square	Size of Round	Minimum Thickness[1]
≤ 8'	≤ 10'	15"	17"	6"
	>10' - 14'	18"	20"	8"
	>14' - 18'	21"	23"	9"
> 8' - 12'	≤ 10'	19"	21"	8"
	>10' - 14'	22"	24"	10"
	>14' - 18'	26"	28"	11"
>12' - 17'	≤ 10'	23"	25"	10"
	>10' - 14'	28"	30"	12"

[1]The cast-in-place post base may require a footing thickness greater than the value in the table above. In such cases, the manufacturer's specified minimum footing thickness shall govern.

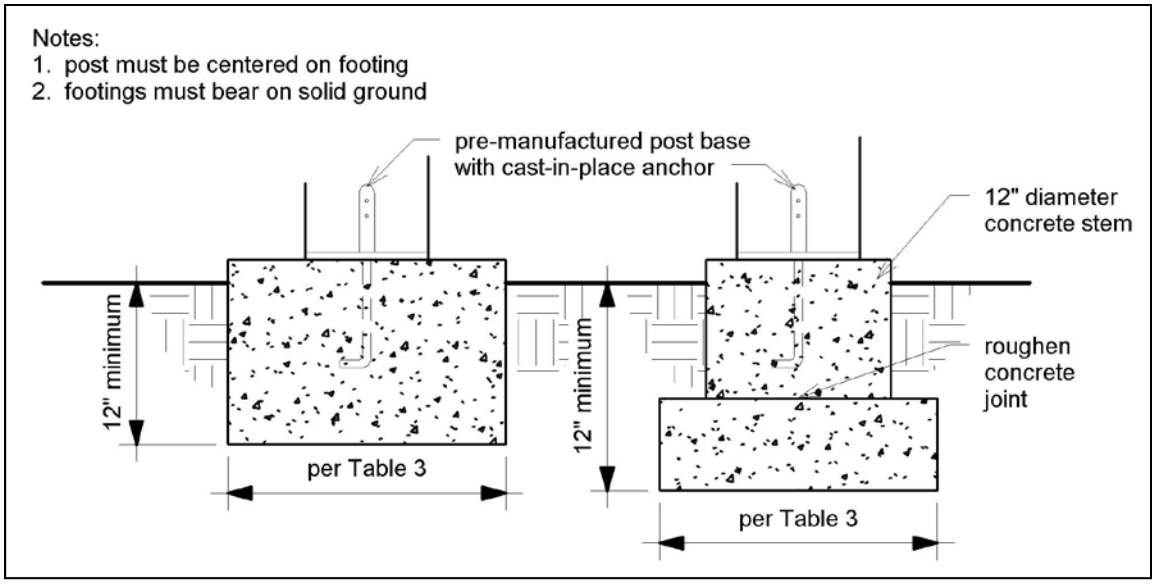

FIGURE 12: TYPICAL FOOTING OPTIONS

LEDGER ATTACHMENTS

Ledger boards shall be attached to the existing house in accordance with the requirements below.

- The depth of a ledger board shall be greater than or equal to the depth of the joists.
- The attachment shall be in accordance with FIGURE 14.
- The band board of the existing structure shall be capable of supporting the new deck. If this cannot be verified or conditions at the existing house differ from the details herein, then a free-standing deck is required. See *Free-Standing Decks* on Sheet 14.
- **Compliance with all the requirements herein is critical to ensure the safety and structural stability of your deck.**

Siding and Flashing

Flashing shall be installed in accordance with the requirements below.

- **The exterior finish, i.e., house siding, must be removed prior to the installation of the ledger board.**
- Continuous flashing with a drip edge, as shown in FIGURE 14, is required at the ledger board when connected to a wood band board.
- Flashing shall be composed of copper (attached using copper nails only), stainless steel, UV resistant plastic or galvanized steel coated with 1.85 oz/sf of zinc (G-185 coating).
- Flashing at a door threshold shall be installed so as to prevent water intrusion from rain or melting ice and snow.

Wood I-Joists

Many homes constructed with wood I-joists, as shown in FIGURE 13, have a 1" or thicker engineered wood product (EWP) band board capable of supporting a deck; see FIGURE 14. If a minimum 1" EWP or 2x band board is not present, then a free-standing deck is required. See *Free-Standing Decks* on Sheet 14 for more information.

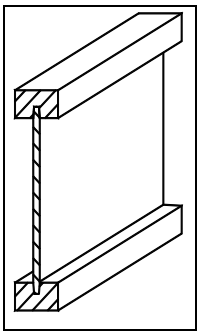

FIGURE 13: WOOD I-JOIST PROFILE

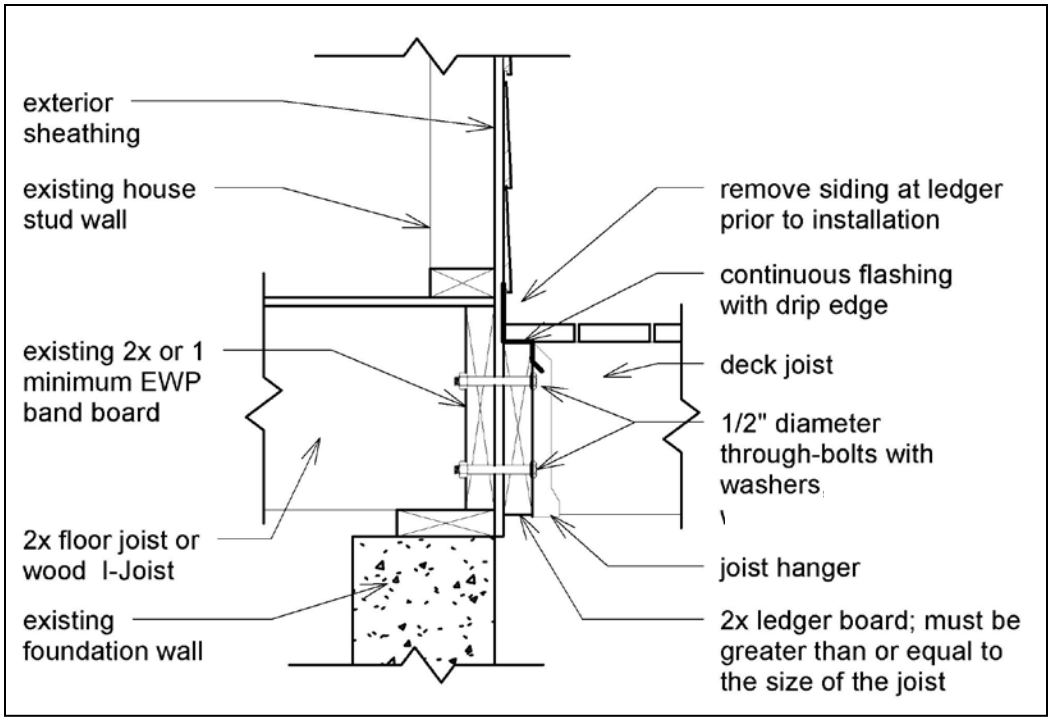

FIGURE 14: ATTACHMENT OF LEDGER BOARD-TO-BAND BOARD

FIGURE 15: NOT USED

FIGURE 16: NOT USED

PROHIBITED LEDGER ATTACHMENTS

The ledger board attachment conditions shown

FIGURE **17** through FIGURE 19 below are strictly prohibited. In such cases the deck shall be free-standing. See FREE-STANDING DECKS on Sheet 14.

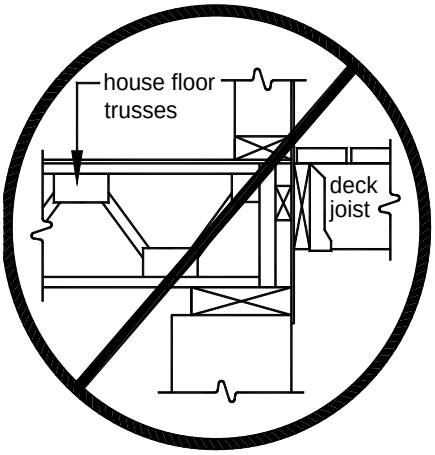

FIGURE 17: FLOOR TRUSSES

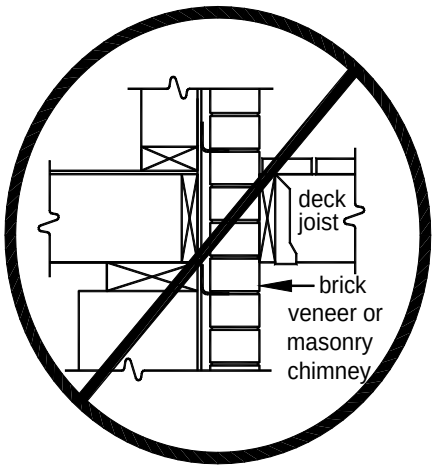

FIGURE 18: BRICK VENEER

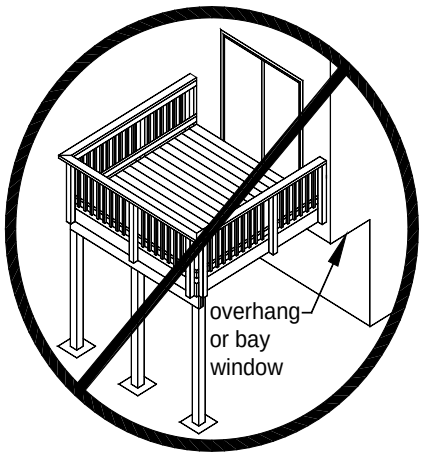

FIGURE 19: HOUSE OVERHANG

LEDGER BOARD FASTENERS

Ledger board fasteners shall be installed in accordance with FIGURE 20 and the on center spacing in TABLE 4. Only those fastener types noted herein are approved for use. Adequacy of connections will be verified by county inspectors.

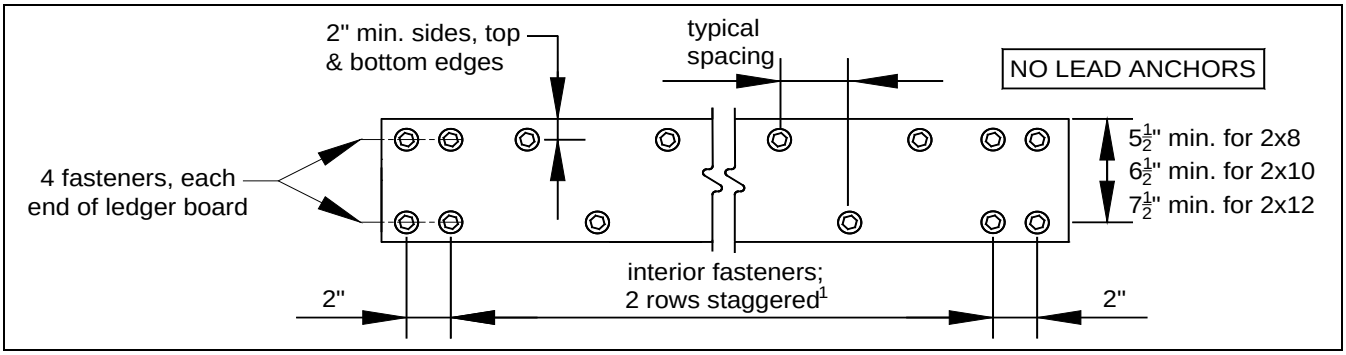

FIGURE 20: LEDGER BOARD FASTENER SPACING AND CLEARANCES

[1] Additional interior fasteners are required at chimney or bay window; see FIGURE 21.

TABLE 4: LEDGER BOARD FASTENER SPACING, ON CENTER

Fastener↓	Joist Span→ / Band Board↓	≤6'	>6'-8'	>8'-10'	>10'-12'	>12'-14'	>14'-16'	>16'-18'
Through Bolts	EWP[1]	24"	18"	14"	12"	10"	9"	8"
	2x lumber	36"	36"	34"	29"	24"	21"	19"

[1] EWP = 1" minimum manufactured engineered wood product; see Sheet 9 for more information.

Through-Bolts

Through-bolts shall have a minimum diameter of $^{1}/_{2}$". Pilot holes for through-bolts shall be $^{17}/_{32}$" to $^{9}/_{16}$" in diameter. Through-bolts must be equipped with washers at the bolt-head and nut.

FRAMING AT CHIMNEY OR BAY WINDOW

All framing at a chimney or bay shall be constructed in accordance with FIGURE 21 and the requirements below.

- Header size shall be equal to the joist size.
- When the chimney or bay window is deeper than 3'-0", install a 6x6 post with footing per the requirements on Sheet 8 below each triple joist at the location of the header connection.
- When the header is longer than 6'-0", install 6x6 posts with footing per the requirements on Sheet 8 below the header to reduce the span to less than 6'-0".
- Post footings must meet the requirements on Sheet 8.
- Joist hangers shall be specifically designed to accommodate the number of members identified in FIGURE 21.

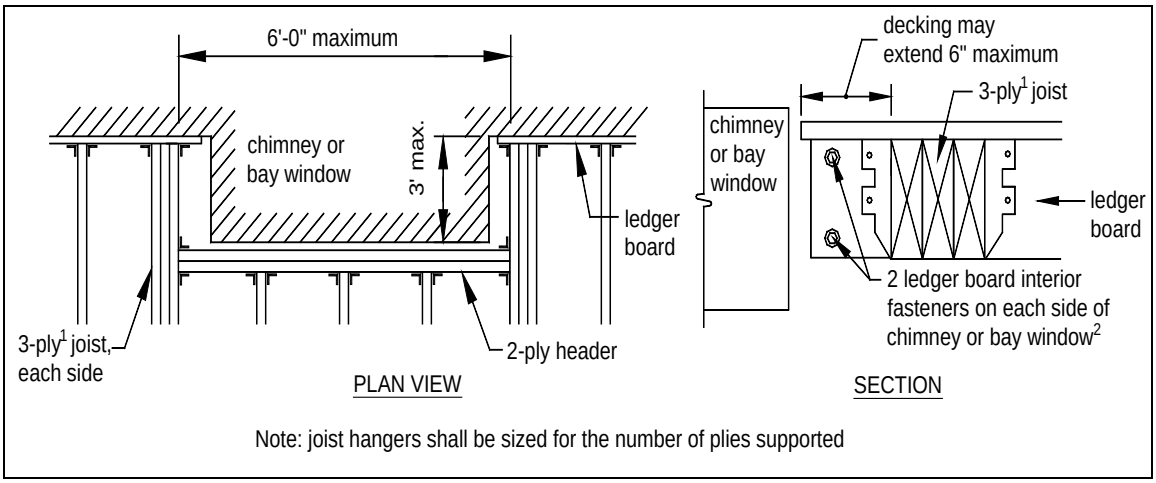

FIGURE 21: REQUIREMENTS FOR FRAMING AT CHIMNEY OR BAY WINDOW

[1]May be reduced to 2-ply joists if joist spacing = 24" on center, joist span ≤ 8'-6" or chimney/bay window depth ≤ 18".
[2]Fasteners adjacent chimney/bay window are considered interior to the ledger board. See FIGURE 20 for fasteners requirements at the end of the ledger board.

LATERAL SUPPORT

All decks greater than 4'-0" above grade shall resist lateral loading by providing diagonal bracing as shown in FIGURE 22 and in accordance with the following:

- Diagonal bracing shall be 2x4 minimum.
- Decks shall have diagonal bracing installed at beam locations.
- Free-standing decks shall also have diagonal bracing installed parallel to joists at each post location in accordance with FIGURE 23.
- Only one type of diagonal bracing shall be provided in each beam line as identified in FIGURE 22 and each joist line as identified in FIGURE 23.
- Connection of diagonal bracing shall be in accordance with FIGURE 24.

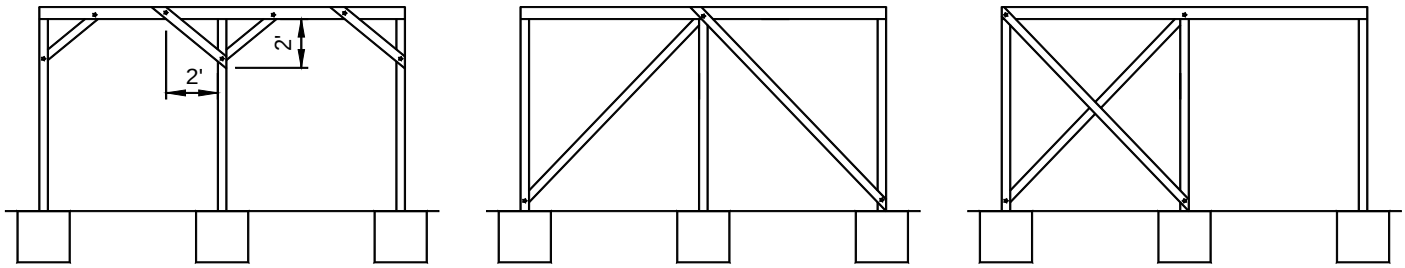

- place knee bracing at all beam- post locations
- place k-bracing in two adjacent bays
- k-bracing is prohibited in single bay decks
- place x-bracing in alternating bays

FIGURE 22: DIAGONAL BRACING AT BEAM-POST LOCATIONS (all decks)

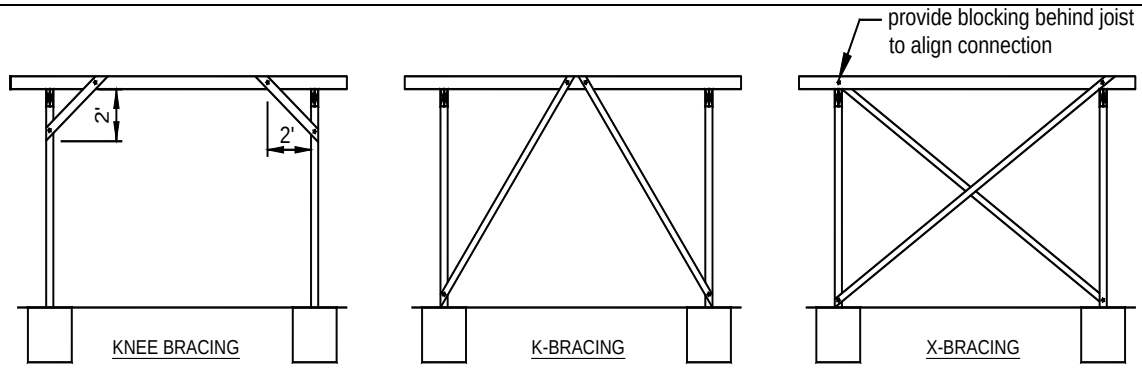

- place knee bracing at all joist-post locations
- align joists to accommodate bracing connection at post
- k-bracing shall be attached at the midspan of the joist
- align joists to accommodate bracing connection at post
- align joists to accommodate bracing connection at post

FIGURE 23: DIAGONAL BRACING AT JOISTS-POST LOCATIONS (free-standing decks only)

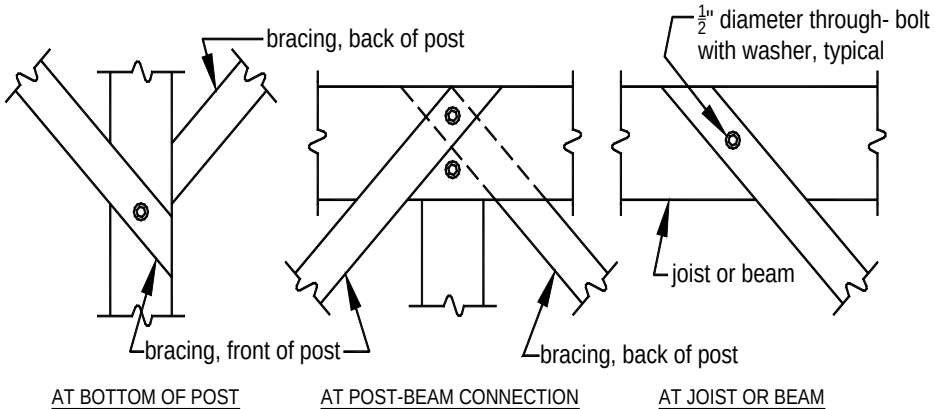

FIGURE 24: TYPICAL CONNECTIONS OF DIAGONAL MEMBERS

FREE-STANDING DECKS

Decks which are free-standing do not utilize the exterior wall of the existing house to support vertical loads. Instead, an additional beam with posts is provided at or offset from the existing house; see FIGURE 4. When the edge of the deck footings are closer than 5'-0" to an existing exterior house wall, it must bear at the same elevation as the existing house footings, see FIGURE 25 below. Beam size is determined by TABLE 2.

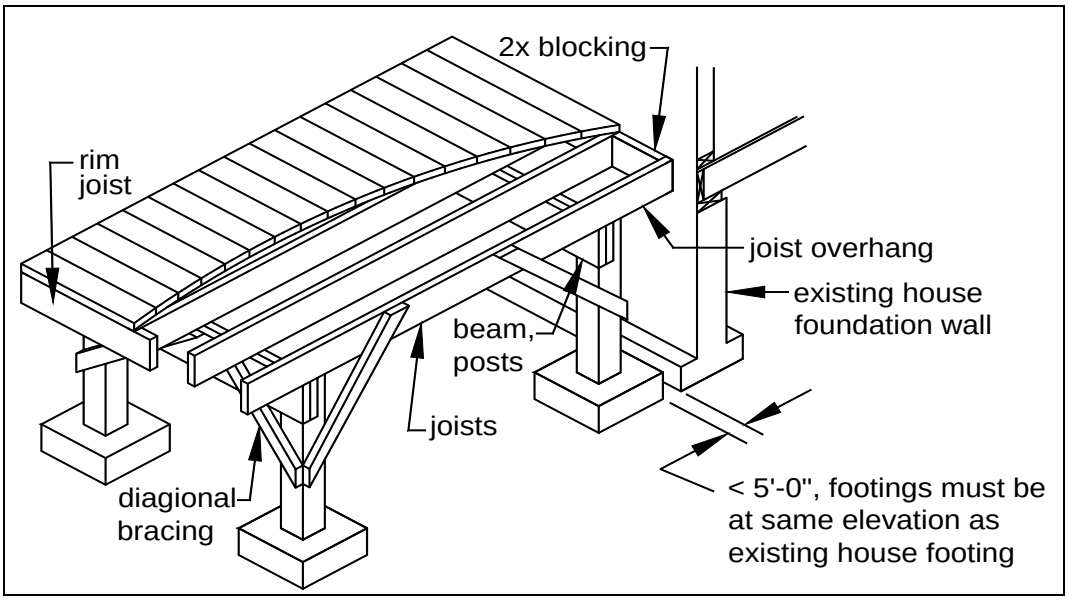

FIGURE 25: FREE-STANDING DECK

GUARDS

Guards, whether required or not, shall be constructed in accordance with the requirements on the proceeding pages and figures. Deviations are prohibited.

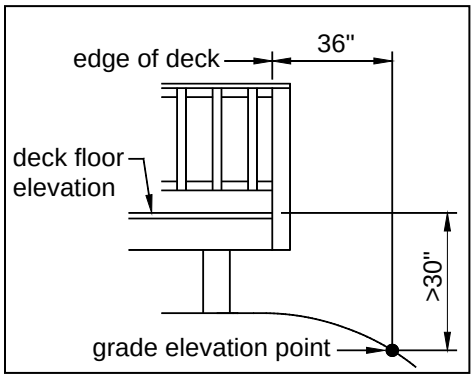

FIGURE 26: WHEN A GUARD IS REQUIRED

When Required

When a deck is greater than 30" above grade at a point 36" from the edge of the deck, as shown in FIGURE 26, a guard is required.

Wood-Plastic Composites

Wood-plastic composites of the same dimensions and complying with the criteria noted on Sheet 3 may be substituted for the guard rail-cap and infill elements shown in FIGURE 27 provided the manufacturer's performance criteria specifically allow it.

Guard Systems

Pre-fabricated systems composed of wood, wood-plastic composites or plastic purchased from a home center store, lumber company or similar will require a plan submission during the permit application process. Only guard systems with a valid evaluation report from an accredited listing agency will be approved for installation.

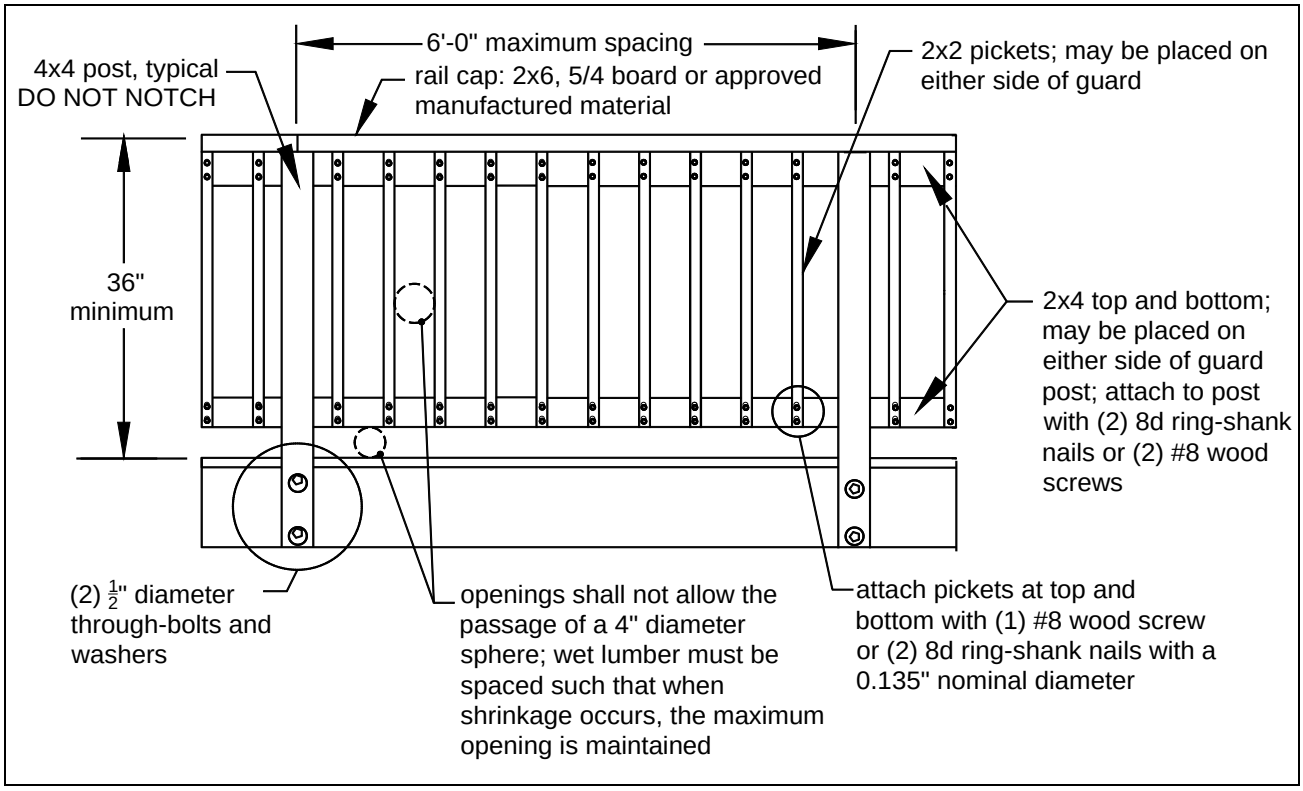

FIGURE 27: TYPICAL GUARD DETAIL

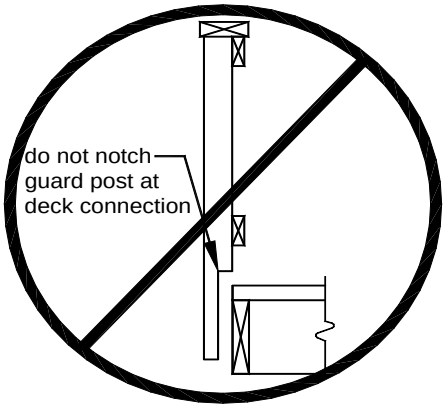

FIGURE 28: NOTCHING AT GUARD POSTS

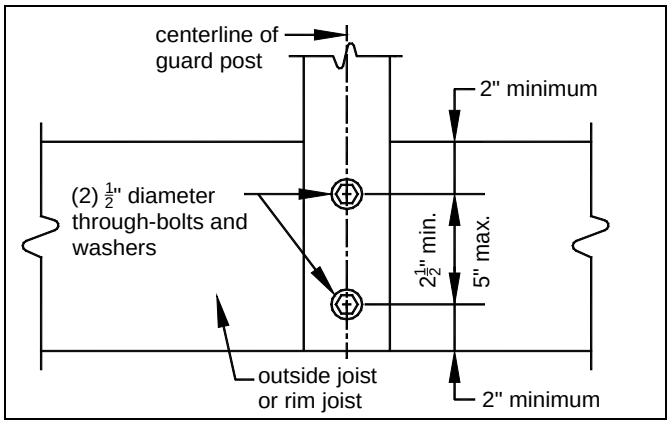

FIGURE 29: GUARD POST ATTACHMENT DETAIL

GUARD POST ATTACHMENTS

Guard posts must be attached in accordance with the requirements below.

- Guard posts must be fastened to the framing in order to ensure the entire guard can resist imposed loads.
- Hold-down anchors, as shown in FIGURE 30 and FIGURE 31, shall be used to attach the guard post to the outside joist and rim joist, respectively.
- Hold-down anchors shall have an 1,800 lb. minimum capacity and shall be galvanized per the requirements on Sheet 3.
- Guard posts may be attached to either side of the rim joist or outside joist.

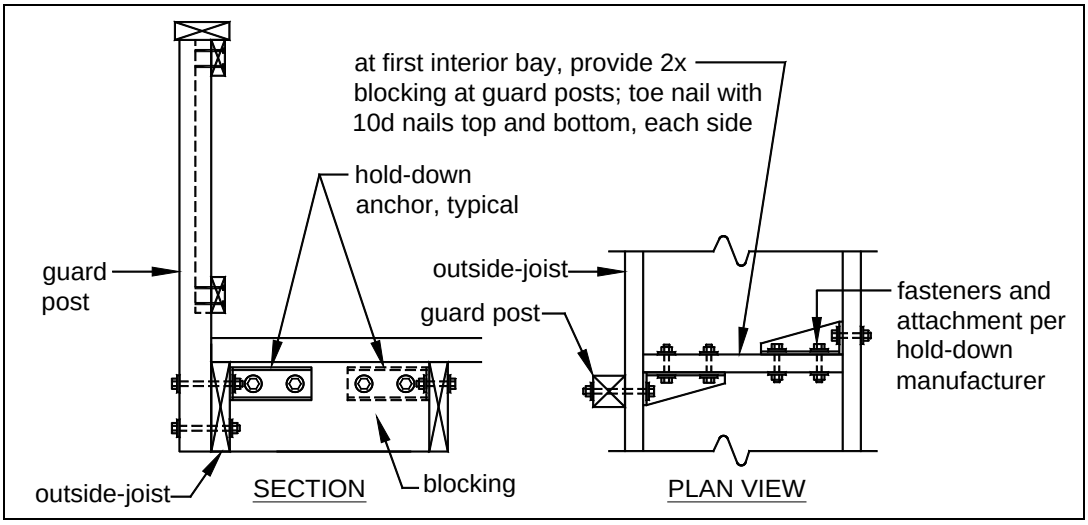

FIGURE 30: GUARD POST-TO-OUTSIDE JOIST DETAIL

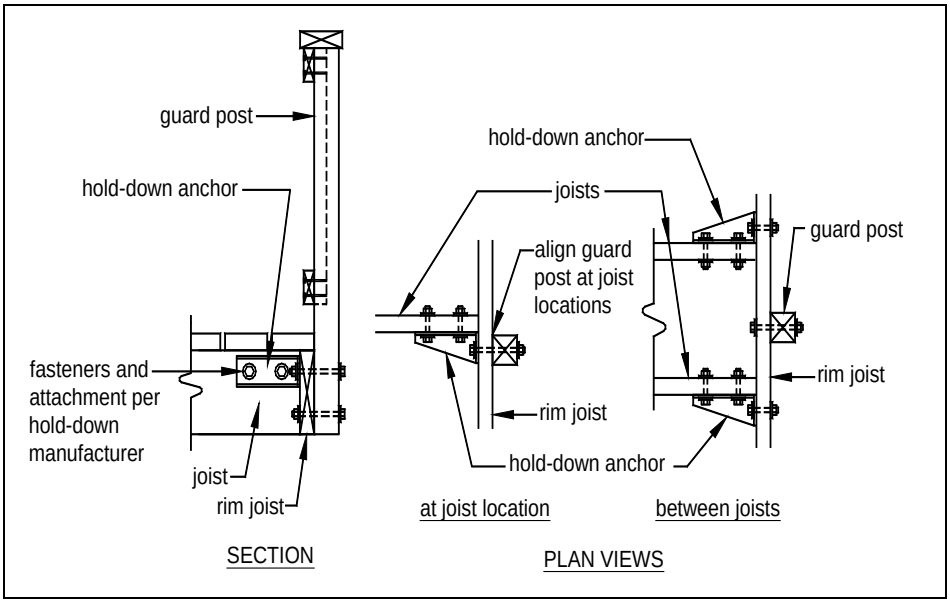

FIGURE 31: GUARD POST-TO-RIM JOIST DETAIL

STAIRS

Stair Geometry

Stairs shall be a minimum of 36" in width as shown in

FIGURE **39**. Tread, riser and nosing dimensions, opening limitations and tolerance minimums shall meet the requirements shown in FIGURE 32.

Tread & Riser Material

Tread and riser material shall be in accordance with the requirements below.

- Tread material shall be equivalent to decking as specified on Sheet 3.
- Wood-plastic composites may not have capacity for stair treads equal to their wood equivalents.
- Tread material shall be attached per FIGURE 35.
- Risers may be framed with 1x lumber minimum or equivalent wood-plastic composite.

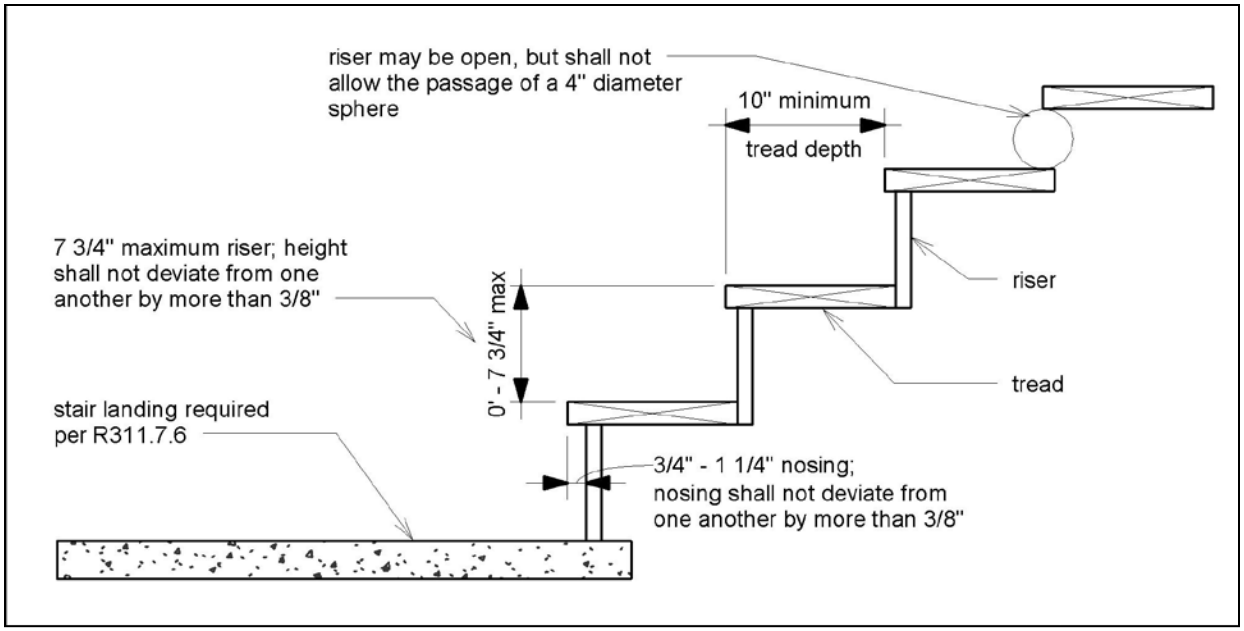

FIGURE 32: TREAD AND RISER DETAIL

Stair Stringers

Stringers shall be constructed in accordance with the following requirements.

- Stringers shall be continuous sawn or solid 2x12s meeting the stair geometry requirements shown in FIGURE 32.
- Attach stringers to the deck per FIGURE 34.
- Stringers shall be spaced at a maximum of 18" on center.
- Measured horizontally, the maximum horizontal stringer spans shall not exceed the lengths shown in FIGURE 33.
- Stringers with spans greater than maximum allowed shall be supported with 4x4 posts along their length to create multiple compliant spans. The 4x4 post shall be notched and bolted to the stringer with (2) $^{1}/_{2}$" diameter through-bolts with washers per FIGURE 11, Option 1. The post shall be centered on a 10" diameter or 8" square, 4" thick footing 12" below grade and be attached per FIGURE 12.
- Intermediate landings may also be provided to shorten the stringer span; see *Stair Landings* on Sheet 18.

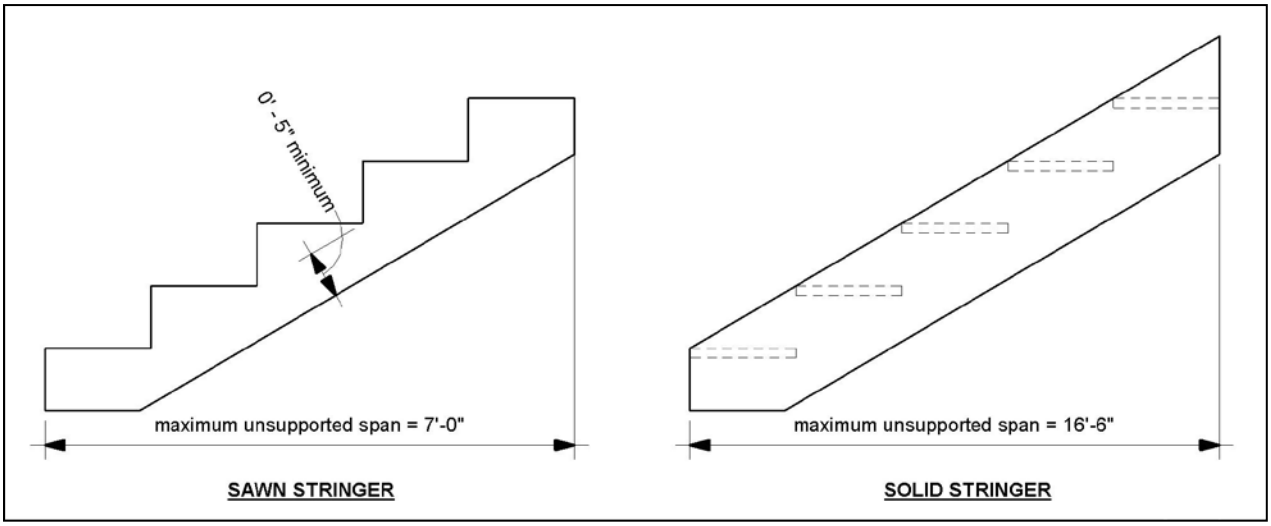

FIGURE 33: STAIR STRINGER REQUIREMENTS

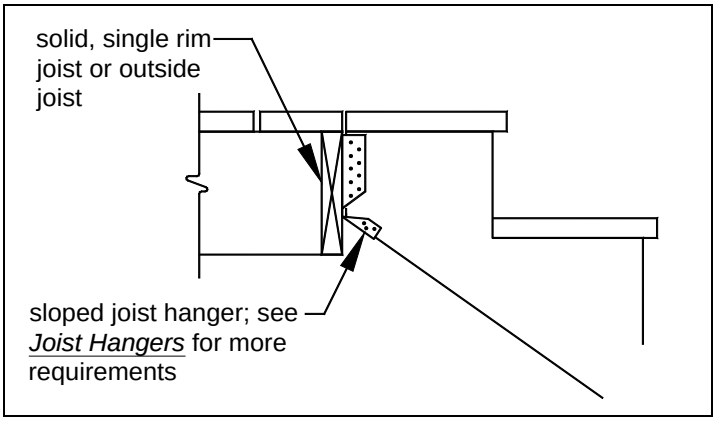

FIGURE 34: STAIR STRINGER ATTACHMENT DETAIL

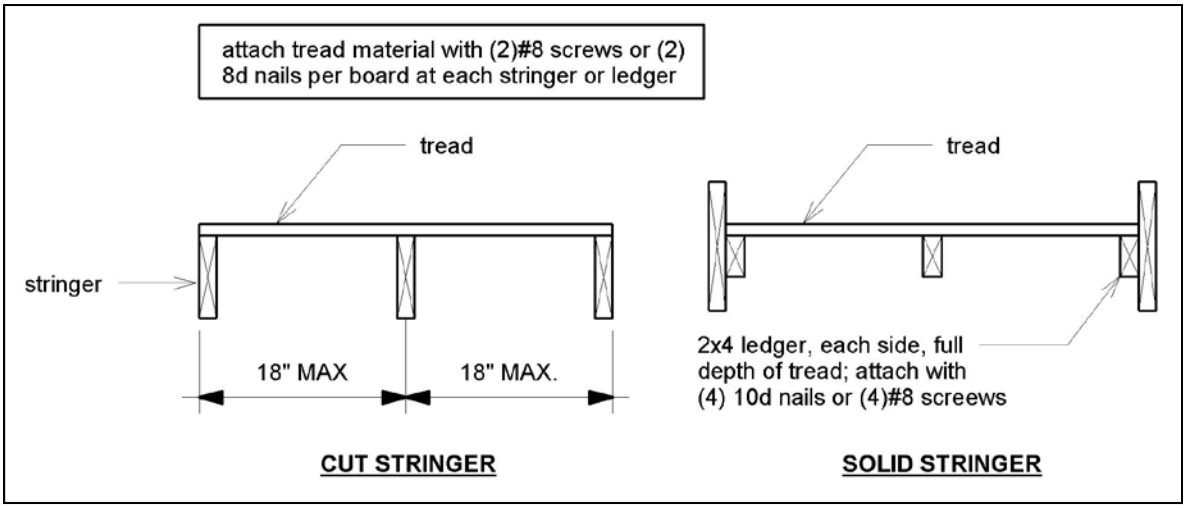

FIGURE 35: TREAD CONNECTION REQUIREMENTS

Stair Landings

A floor or landing will be required at the top and bottom of each stairway per IRC Section R311.7.6. If the total vertical height of a stairway exceeds 12'-0", then an intermediate landing will be required. Intermediate stair landings shall be designed and constructed as a free-standing deck using the details herein. However, for stair landings only, 4x4 posts may be used in lieu of 6x6 posts for heights less than or equal to 7'-0". Every landing shall have a minimum dimension of 36" measured in the direction of travel and not less than the width of the stairways served.

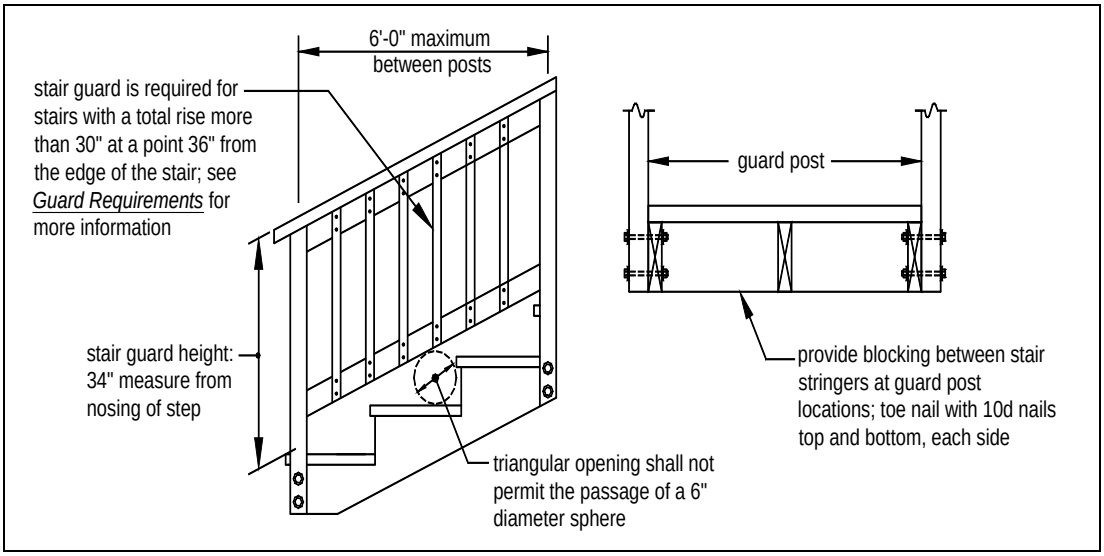

FIGURE 36: STAIR GUARD REQUIREMENTS

Stair Handrails

Handrails shall be constructed in accordance with the following requirements.

- Stairs with four or more risers shall have a handrail on one side.
- Handrails shall be graspable per FIGURE 37.
- Handrail and connecting hardware material shall be decay-resistant and/or corrosion resistant.
- Handrail shall be attached to the stair guard or an existing exterior wall which acts as a barrier to the stairs. See FIGURE 38.
- All shapes shall have a smooth surface with no sharp corners.
- Recessed sections may be shaped from a 2x6 or $^{5}/_{4}$ board.
- Handrails shall run continuously from a point directly over the lowest riser to a point directly over the highest riser and shall return to the guard at each end; see
- FIGURE **39**.
- Handrails may be interrupted by guard posts only at a turn in the stair.

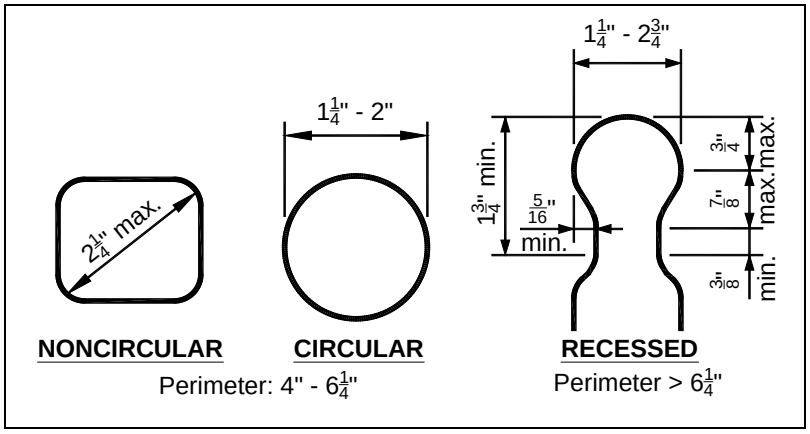

FIGURE 37: HANDRAIL GRASPABILITY TYPES/GEOMETRY

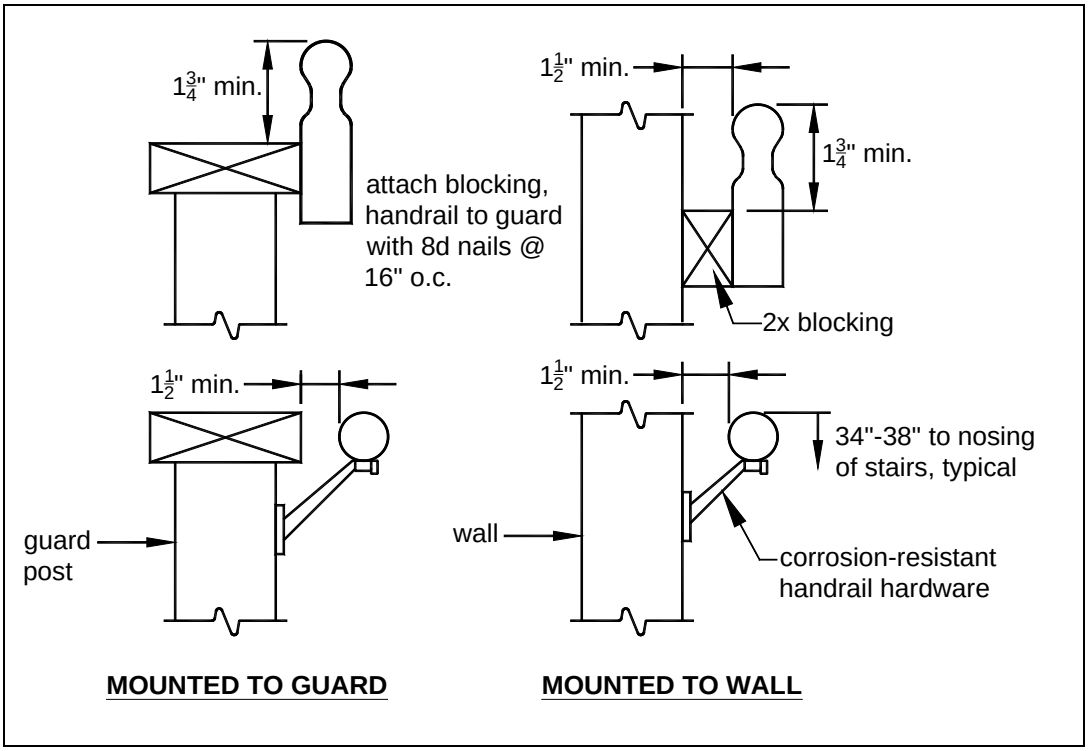

FIGURE 38: HANDRAIL REQUIREMENTS

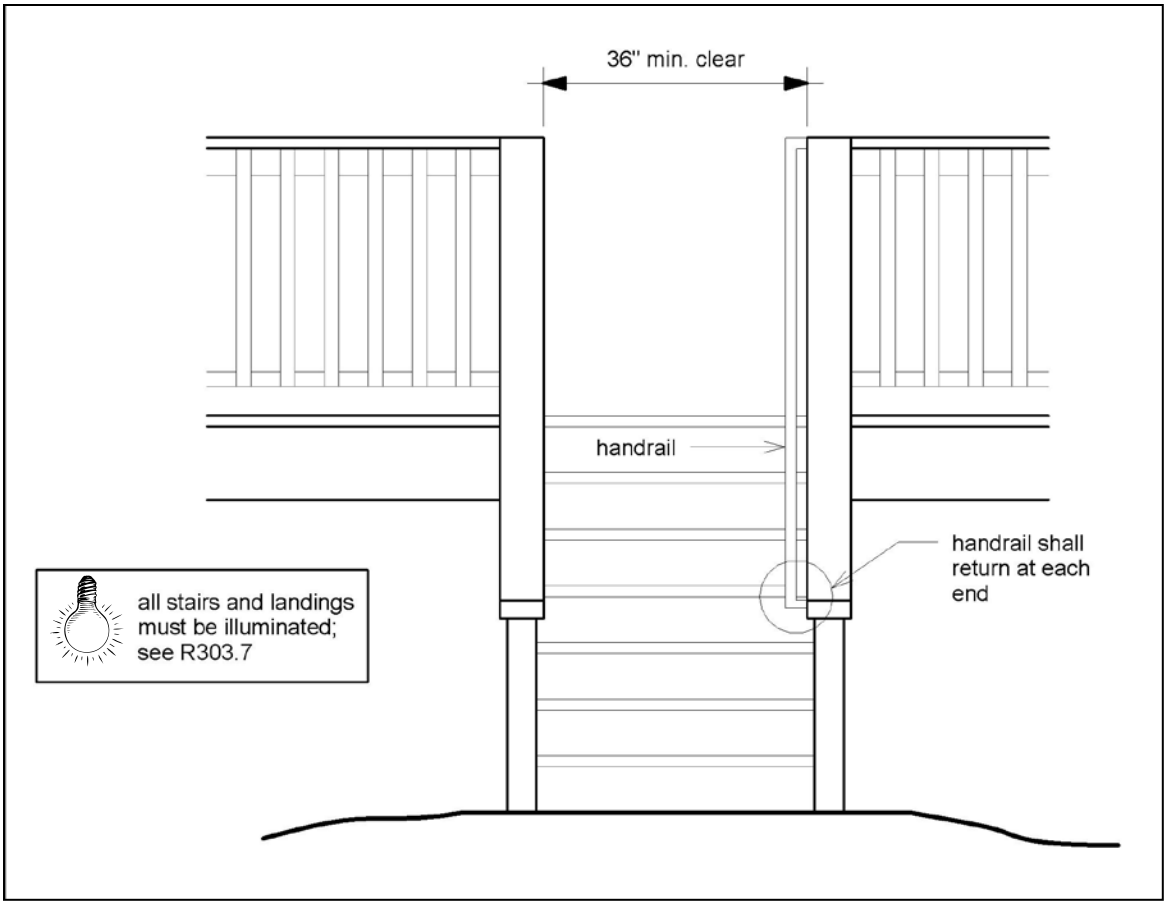

FIGURE 39: MISCELLANEOUS STAIR REQUIREMENTS

Stair Lighting

Stairways shall be illuminated in accordance with IRC 303.7.

Stair Stringer Footings

Stair stringers at grade shall bear on a concrete footing as shown in FIGURE 40. The footings for each stringer may be combined and poured as a 12" deep slab.

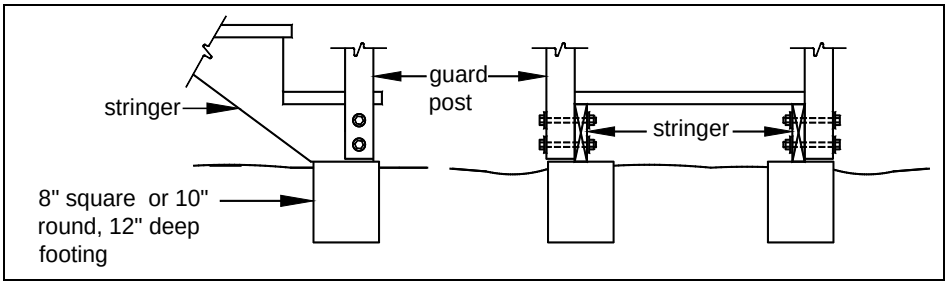

FIGURE 40: STAIR STRINGER FOOTING

SAFETY GLAZING

To reduce injury due to an accidental impact, safety glazing in window and door glass is required when the existing house wall encloses any portion of the deck or acts as a barrier to adjacent stairs, landings and the areas at the top and bottom of the stairs. Glazing shall be located in the affected panes of the areas identified below.

- Adjacent surface of deck: individual panes wholly located in the area identified in FIGURE 41 with a total pane area greater than 9 sf.
- Adjacent stairway: individual panes partially or wholly located in the area shown in FIGURE 42.

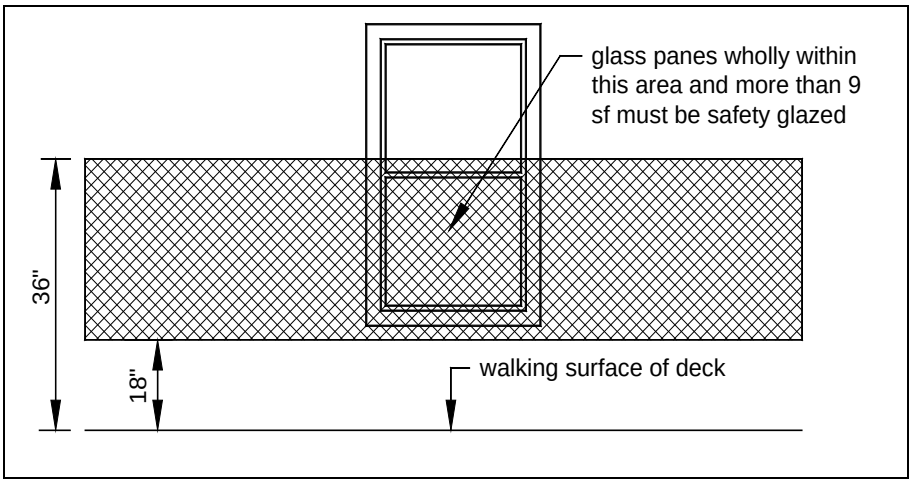

FIGURE 41: SAFETY GLAZING AREA AT WALKING SURFACE

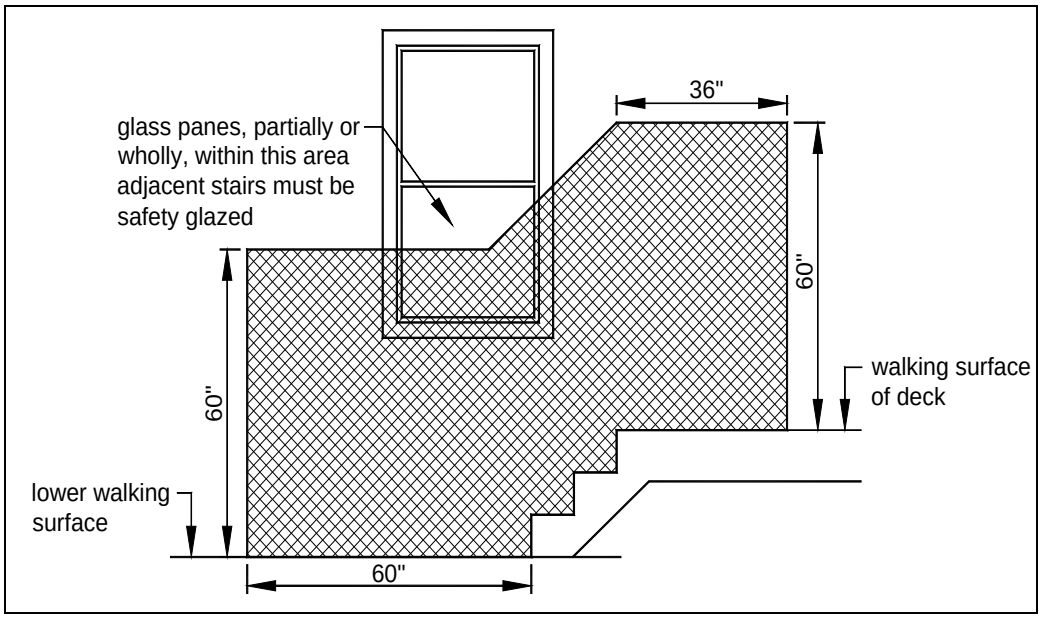

FIGURE 42: SAFETY GLAZING AREA AT STAIRS