February 8, 2022

Ms. Mary Dunne
State Historic Preservation Officer
Connecticut Department of Economic and Community Development
450 Columbus Boulevard, South Tower
Hartford, CT 06103
Via email: Mary.Dunne@ct.gov

Mashantucket Pequot Tribal Nation
Marissa Turnbull, THPO
550 Trolley Line Boulevard
P. O. Box 3202
Mashantucket, Connecticut 06338-3202
Via email: mturnbull@mptn-nsn.gov

Mohegan Tribe of Indians of Connecticut
James Quinn, THPO
13 Crow Hill Road
Uncasville, Connecticut 06382
Via email: jquinn@moheganmail.com

Narraganset Indian Nation
John Brown, THPO
PO Box 463
Charlston, Rhode Island 02813
Via email: tashtesook@aol.com

Re: SHPO/THPO Project Notification Review
Tunxis Hill Park Proposed Floodwater Detention Site
Fairfield, Connecticut
SLR #141.11342.00028

Dear Recipients,

Using local funds, the Town of Fairfield (Town) proposes to construct a temporary detention basin within the western portion of Tunxis Hill Park in Fairfield. The Town has retained SLR International Corporation (SLR) to prepare the design plans and permits for the proposed project.

Tunxis Hill Park is a town-owned property located along an unnamed tributary watercourse to the Rooster River. It is located directly upstream of a network of residential streets that become flooded on a regular basis. The park hosts two baseball diamonds, a tennis court, and a playscape. The western portion of the park is undeveloped and wooded. Two unnamed watercourses bordered by a fringe of forested wetlands vertically bisect the site through its center. The approximately 1.9-acre wetland corridor divides the existing park improvements to the east from the undeveloped woodland to the west. The conclusion of a 2019 feasibility assessment found that the installation of a berm (average height of 6 feet, maximum height of 8 feet) at the edge of the outfield of the lower baseball field and an outlet control structure (OCS) to create detention within the southwestern wooded area could provide sufficient capacity to capture up to 77 percent of the 10-year flood. Combined with select drainage improvements to the existing system downstream of the detention area, this could mitigate flooding of the Nordstrand, Melville, Villa, and Nichols Avenues during floods up to the 10-year severity.

The project proposes the construction of an approximately 0.407-acre, 8-foot-tall berm in the southwestern portion of the site that is approximately 60 feet wide and extends approximately 400 feet from north to south. Along the western (upstream) slope of the berm, a 5-foot by 5-foot concrete outlet control structure will connect to a proposed 42-inch concrete pipe to extend 217 feet to the east beneath the baseball field to connect to a proposed 36-inch reinforced concrete pipe. The proposed 36-inch pipe will lie adjacent to an existing 36-inch pipe that conveys drainage from the central portion of the park. These pipes will both outlet north of Villa Place, east of the intersection with Nordstrand Avenue.

The installation of the berm will allow for a 1.92-acre detention area within the undeveloped, wooded area to the southwest of the lower baseball field. It is anticipated that the detention area will hold an estimated 10.06 acre-feet of flood waters at a depth of up to 10 feet during short-term inundation events.

The proposed project will result in 2,200 square-feet (SF) or 0.05-acre of permanent, direct wetland impacts caused by the placement of fill for the berm, the installation of the concrete OCS, and a short segment of 42” diameter concrete pipe, to be bedded on embankment fill. These impacts will occur within the southern wetland on site which comprises approximately 1.3 acres of palustrine fringe wetlands bordering an unnamed, east-flowing watercourse. Within the 90-foot Upland Review Area (URA) to on-site wetlands, there will be a total of 13,200 SF (0.30-acre) of direct impact from the placement of fill for the berm, as well as a segment of the 42” outlet pipe and approximately 50 linear feet from a proposed 10-foot-wide maintenance access road extending to the project site from Nordstrand Avenue.

Temporary wetland impacts will be limited to sedimentation and erosion controls installed prior to construction activities to limit uncontrolled material flow due to construction activities and to protect water quality in the short-term from project activities. Within the wetland boundary, there will be approximately 40 linear feet of temporary impacts from sediment filter fence and stacked hay bales to be placed immediately downgradient of the berm grading area. The majority of S&E controls will be

implemented within the URA, outside of the wetland boundaries, and will include temporary baled hay erosion barriers and filter fence to be placed around the perimeter of the berm construction footprint, as well as a sediment filter-lined temporary soil stockpile area to be placed outside of the wetlands and URA. The slopes of the berm (outside of the wetland area) will be draped with an erosion control blanket to remain in place until permanent vegetative cover is established. A temporary construction entrance anti-tracking pad will be maintained at the eastern boundary of the proposed maintenance access route from Nordstrand Avenue. All S&E controls provided are in accordance with the *2002 Connecticut Guidelines for Soil Erosion and Sediment Control* and depicted on the project plans. Best management practices for water handling will be carried out during project activities to isolate the portion of the stream channel involved in project activities and protect water quality until all elements of proposed storm system are functional.

In the long-term, indirect wetland impacts will be incurred through the temporary inundation of a portion (approximately 45,000 SF, or 1.03 acres) of the southern, on-site wetland during high-flow events. The zone of inundation will include portions of the unnamed stream channel, emergent vegetated banks, and open-canopy forested and scrub-shrub wetlands bordering the watercourse within the eastern portion of the wetland. The project as described is not anticipated to adversely impact wetlands or their ability to perform the wetland functions as assessed by SLR and presented in the appended Wetland Function-Value Evaluation form.

An important societal value of wetlands is their ability to assimilate flood waters, mitigating hazards to human safety and reducing the threat of property damage. The proposed project leverages this existing wetland function of the site and enhances its benefits without appreciable harm to other wetland functions and values. While the proposed detention basin will be a dry basin, to be drained of stored water at a controlled rate post flooding events through the OCS and downstream pipes, future climate and precipitation patterns will determine the frequency and duration of the basin's inundation. While the existing tree canopy should be able to sustain occasional, temporary inundation, over time the vegetation composition within the basin area may transition to a more fast-growing, herbaceous cover type. Given the wetland's location in a suburban residential setting adjacent to impervious roads and outside of any mapped habitat for sensitive species, a potential shift in vegetation type is not anticipated to have a significant, adverse ecological impact. Further, the approximately 2-acre detention area sits at the edge of an approximately 15-acre forested zone and the remaining, untouched area will continue to provide wildlife habitat and other forest ecosystem services following project implementation.

Thank you for your assistance. Should you require any additional information to facilitate your review, please do not hesitate to contact me.

Sincerely,

SLR International Corporation

Megan B. Raymond, MS, PWS, CFM
Principal Scientist, Wetlands & Waterways Lead

Attachments:

1. Project Notification Form
2. Figures
3. Site Photographs
4. Assessor's Property Cards
5. Project Site Plans

Connecticut
Department of Economic and Community Development
State Historic Preservation Office
450 Columbus Boulevard, Suite 5 | Hartford, CT 06103 | 860.500.2300 | ct.gov/historic-preservation

PROJECT REVIEW COVER FORM

This is: ☒ a new submittal ☐ supplemental information ☐ other Date Submitted: February 8, 2022

PROJECT INFORMATION

Project Name: Tunxis Hill Park Proposed Floodwater Detention Site

Project Proponent: Town of Fairfield c/o Bill Hurley, Town Engineer
The individual or group sponsoring, organizing, or proposing the project.

Project Street Address: 225 Melville Avenue
Include street number, street name, and or Route Number. If no street address exists give closest intersection.

City or Town: Fairfield County: Fairfield
Please use the municipality name and **not** the village or hamlet.

PROJECT DESCRIPTION (REQUIRED)

Please summarize the project below. In a separate attachment, describe the project in detail. As applicable, provide any information regarding past land use, project area size, renovation plans, demolitions, and/or new construction.

Construction of a berm and outlet control structure to create a temporarily inundated, ~1-acre detention area for flood mitigation in the Rooster River watershed.

List all state and federal agencies involved in the project and indicate the funding, permit, license or approval program pertaining to the proposed project:

Agency Type	Agency Name	Program Name
☒ State ☐ Federal	CT DEEP	Section 401 Water Quality Certificate
☐ State ☒ Federal	U.S. Army Corps of Engineers	Section 404, Self Verification
☐ State ☐ Federal		
☐ State ☐ Federal		

If there is no state or federal agency involvement, please state the reason for your review request:
n/a

FOR SHPO USE ONLY

Based on the information submitted to our office for the above named property and project, it is the opinion of the Connecticut State Historic Preservation Office that no historic properties will be affected by the proposed activities.*

Jonathan Kinney Date
Deputy State Historic Preservation Officer

*All other determinations of effect will result in a formal letter from this office

Connecticut
Department of Economic and Community Development
State Historic Preservation Office
450 Columbus Boulevard, Suite 5 | Hartford, CT 06103 | 860.500.2300 | DECD.org

PROJECT REVIEW COVER FORM

CULTURAL RESOURCES IDENTIFICATION

Background research for previously identified historic properties within a project area may be undertaken at the SHPO's office. To schedule an appointment, please contact Catherine Labadia, 860-500-2329 or Catherine.labadia@ct.gov. Some applicants may find it advantageous to hire a qualified historic preservation professional to complete the identification and evaluation of historic properties.

Are there any historic properties listed on the State or National Register of Historic Places within the project area? (Select one)

☐ Yes ☐ No ☒ Do Not Know **If yes**, please identify: _____

Architecture

Are there any buildings, structures, or objects within the Area of Potential Effects (houses, bridges, barns, walls, etc.)? The area of potential effects means the geographic area or areas within which an undertaking may directly or indirectly cause alterations in the character or use of historic properties. If you're not sure, check "I don't know."

☐ Yes (attach clearly labeled photographs of each resource and applicable property cards from the municipality assessor)

☐ No (proceed to next section)

☒ I don't know (proceed to next section)

Date the existing building/structures/objects were constructed: _____

If the project involves rehabilitation, demolition, or alterations to existing buildings older than 50 years, provide a work plan (If window replacements are proposed, provide representative photographs of existing windows).

Archeology

Does the proposed project involve ground disturbing activities?

☒ Yes (provide below or attach a description of current and prior land use and disturbances. Attach an excerpt of the soil survey map for the project area. These can be created for free at: **https://websoilsurvey.nrcs.usda.gov**

See attached narrative

☐ No

CHECKLIST (Did you attach the following information?)

Required for all Projects	Required for Projects with architectural resources
☒ Completed Form	☐ Work plans for rehabilitation or renovation
☒ Map clearly labelled depicting project area	☒ Assessor's Property Card
☒ Photographs of current site conditions	Required for Projects with ground disturbing activities
☒ Site or project plans for new construction	☒ Soil survey map
Suggested Attachments, as needed	
☐ Supporting documents needed to explain project	☐ Supporting documents identifying historic properties
☐ Historic maps or aerials (available at http://magic.lib.uconn.edu or https://www.historicaerials.com/)	

PROJECT CONTACT

Name: Megan Raymond Firm/Agency: SLR International Corporation

Address: 195 Church Street, 7th Floor

City: New Haven State: CT Zip: 06510

Phone: 203-344-7889 Email: mraymond@slrconsulting.com

Federal and state laws exist to ensure that agencies, or their designated applicants, consider the impacts of their projects on historic resources. At a minimum, submission of this completed form with its attachments constitutes a request for review by the Connecticut SHPO. The responsibility for preparing documentation, including the identification of historic properties and the assessment of potential effects resulting from the project, rests with the federal or state agency, or its designated applicant. The role of SHPO is to review, comment, and consult. SHPO's ability to complete a timely project review largely depends on the quality of the materials submitted. Please mail the completed form with all attachments to the attention of: Environmental Review, State Historic Preservation Office, 450 Columbus Boulevard, Suite 5, Hartford, CT. **Electronic submissions are not accepted at this time**.

Date Saved: 12/14/2021

Document Path: N:\Cheshire CT\GIS\1342-28\Maps\Site1_USGS.mxd

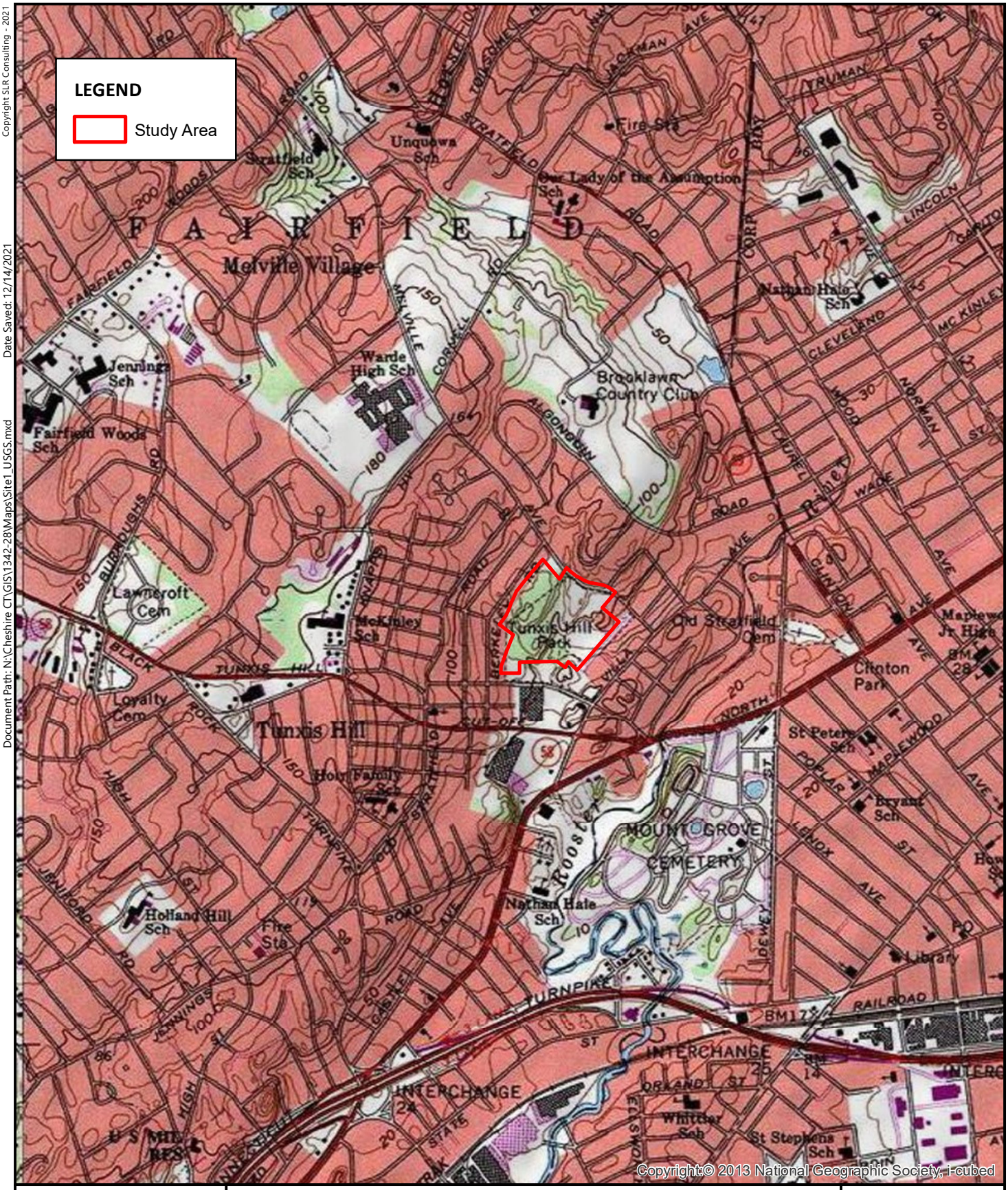

SLR

195 CHURCH STREET
7TH FLOOR
NEW HAVEN, CT 06511
203.344.7887

SITE 1 - TUNXIS HILL PARK - SITE LOCATION

ROOSTER RIVER DETENTION STUDY
TOWN OF FAIRFIELD
225 MELVILLE AVENUE
FAIRFIELD, CONNECTICUT

N

0 500 1,000
Feet

SCALE 1 " = 2,000 '

DATE 12/14/2021

141.11342.00028
PROJ. NO.

FIG. 1

Soil Map—State of Connecticut
(Site 1 - Tunxis Hill Park)

Map Scale: 1:3,480 if printed on A landscape (11" x 8.5") sheet.

N

Meters: 0 50 100 200 300

Feet: 0 150 300 600 900

Map projection: Web Mercator Corner coordinates: WGS84 Edge tics: UTM Zone 18N WGS84

MAP LEGEND

Area of Interest (AOI)

- Area of Interest (AOI)

Soils

- Soil Map Unit Polygons
- Soil Map Unit Lines
- Soil Map Unit Points

Special Point Features

- Blowout
- Borrow Pit
- Clay Spot
- Closed Depression
- Gravel Pit
- Gravelly Spot
- Landfill
- Lava Flow
- Marsh or swamp
- Mine or Quarry
- Miscellaneous Water
- Perennial Water
- Rock Outcrop
- Saline Spot
- Sandy Spot
- Severely Eroded Spot
- Sinkhole
- Slide or Slip
- Sodic Spot
- Spoil Area
- Stony Spot
- Very Stony Spot
- Wet Spot
- Other
- Special Line Features

Water Features

- Streams and Canals

Transportation

- Rails
- Interstate Highways
- US Routes
- Major Roads
- Local Roads

Background

- Aerial Photography

MAP INFORMATION

The soil surveys that comprise your AOI were mapped at 1:12,000.

Warning: Soil Map may not be valid at this scale.

Enlargement of maps beyond the scale of mapping can cause misunderstanding of the detail of mapping and accuracy of soil line placement. The maps do not show the small areas of contrasting soils that could have been shown at a more detailed scale.

Please rely on the bar scale on each map sheet for map measurements.

Source of Map: Natural Resources Conservation Service
Web Soil Survey URL:
Coordinate System: Web Mercator (EPSG:3857)

Maps from the Web Soil Survey are based on the Web Mercator projection, which preserves direction and shape but distorts distance and area. A projection that preserves area, such as the Albers equal-area conic projection, should be used if more accurate calculations of distance or area are required.

This product is generated from the USDA-NRCS certified data as of the version date(s) listed below.

Soil Survey Area: State of Connecticut
Survey Area Data: Version 21, Sep 7, 2021

Soil map units are labeled (as space allows) for map scales 1:50,000 or larger.

Date(s) aerial images were photographed: Jun 27, 2014—Jul 22, 2014

The orthophoto or other base map on which the soil lines were compiled and digitized probably differs from the background imagery displayed on these maps. As a result, some minor shifting of map unit boundaries may be evident.

Map Unit Legend

Map Unit Symbol	Map Unit Name	Acres in AOI	Percent of AOI
3	Ridgebury, Leicester, and Whitman soils, 0 to 8 percent slopes, extremely stony	4.3	17.6%
60B	Canton and Charlton fine sandy loams, 3 to 8 percent slopes	0.0	0.0%
73C	Charlton-Chatfield complex, 0 to 15 percent slopes, very rocky	10.2	41.3%
306	Udorthents-Urban land complex	0.2	0.8%
308	Udorthents, smoothed	9.9	40.3%
Totals for Area of Interest		**24.6**	**100.0%**

Date Saved: 1/18/2022

Document Path: N:\Cheshire CT\GIS\1342-28\Maps\Site 1_Fig 4_Proposed Overlay.mxd

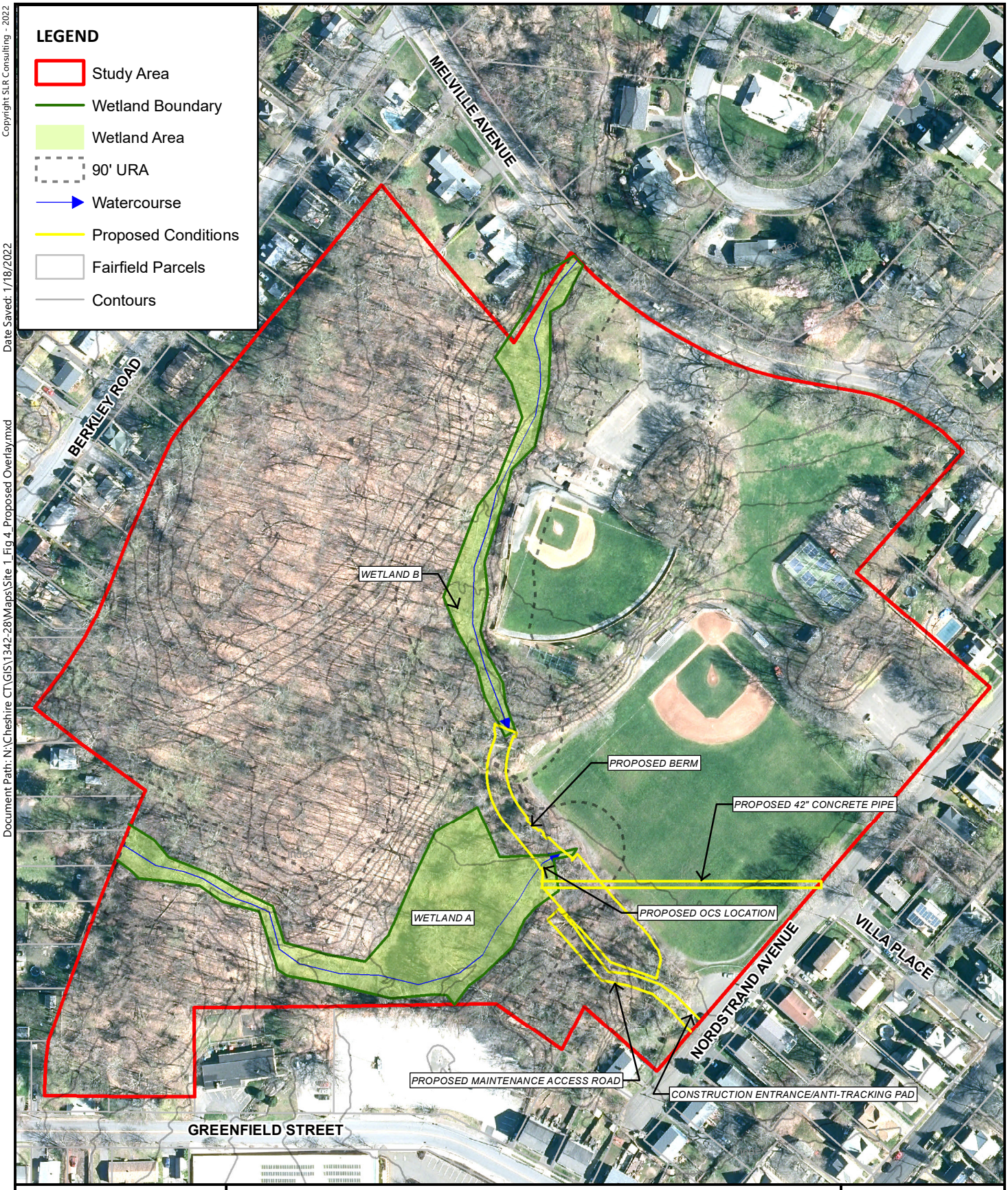

SLR
195 CHURCH STREET
7TH FLOOR
NEW HAVEN, CT 06511
203.344.7887

SITE 1 - TUNXIS HILL PARK - PROPOSED CONDITIONS

ROOSTER RIVER DETENTION STUDY
TOWN OF FAIRFIELD
225 MELVILLE AVENUE
FAIRFIELD, CONNECTICUT

N

0 260
Feet

SCALE 1 " = 250 '
DATE 1/18/2022
141.11342.00028
PROJ. NO.

FIG. 4

225 MELVILLE AVENUE

Location	225 MELVILLE AVENUE	**Mblu**	42/ 48/ / /
Acct#	05451	**Owner**	FAIRFIELD TOWN OF
Assessment	$4,596,550	**Appraisal**	$6,566,500
PID	2855	**Building Count**	1

Current Value

Appraisal			
Valuation Year	**Improvements**	**Land**	**Total**
2021	$136,600	$6,429,900	$6,566,500
Assessment			
Valuation Year	**Improvements**	**Land**	**Total**
2021	$95,620	$4,500,930	$4,596,550

Owner of Record

Owner	FAIRFIELD TOWN OF	**Sale Price**	$0
Co-Owner		**Certificate**	
Address	725 OLD POST ROAD FAIRFIELD, CT 06824	**Book & Page**	0207/0503
		Sale Date	01/01/1800

Ownership History

Ownership History				
Owner	**Sale Price**	**Certificate**	**Book & Page**	**Sale Date**
FAIRFIELD TOWN OF	$0		0207/0503	01/01/1800

Building Information

Building 1 : Section 1

Year Built:	1999
Living Area:	352
Replacement Cost:	$24,427
Building Percent Good:	82
Replacement Cost Less Depreciation:	$20,000

Building Attributes

Field	Description
Style:	Snack Bar
Model	Comm/Ind
Grade	Low Cost
Stories:	2
Occupancy	1.00
Exterior Wall 1	Plywood/T-111
Exterior Wall 2	
Roof Structure	Gable/Hip
Roof Cover	Asphalt
Interior Wall 1	Minim/Masonry
Interior Wall 2	
Interior Floor 1	Concr-Finished
Interior Floor 2	
Heating Fuel	None
Heating Type	None
AC Type	None
Struct Class	
Bldg Use	Municipal Park C
Total Rooms	
Total Bedrms	00
Total Baths	0
Liv Area	
Effect Area	
1st Floor Use:	903Y
Heat/AC	None
Frame Type	Wood Frame
Baths/Plumbing	Average
Ceiling/Wall	None
Rooms/Prtns	Average
Wall Height	8.00
% Comn Wall	0.00

Building Photo

(http://images.vgsi.com/photos2/FairfieldCTPhotos//\0086\IMG_4301_8637

Building Layout

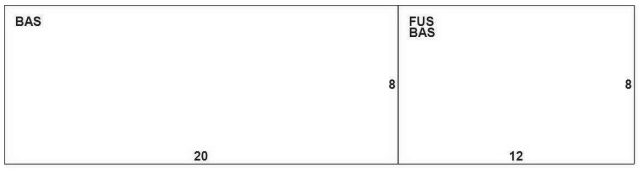

(ParcelSketch.ashx?pid=2855&bid=2810)

Building Sub-Areas (sq ft)			
Code	Description	Gross Area	Living Area
BAS	First Floor	256	256
FUS	Upper Story, Finished	96	96
		352	352

Extra Features

Extra Features
No Data for Extra Features

Land

Land Use

Land Line Valuation

Use Code	903X	**Size (Sqr Feet)**	1113829
Description	Municipal Park C	**Depth**	0
Zone	B	**Assessed Value**	$4,500,930
Neighborhood	C6	**Appraised Value**	$6,429,900
Alt Land Appr	No		
Category			

Outbuildings

Outbuildings						Legend
Code	**Description**	**Sub Code**	**Sub Description**	**Size**	**Value**	**Bldg #**
FN1	FENCE-4' CHAIN			400.00 L.F.	$2,600	1
FN5	FENCE-10'CHAIN			360.00 L.F.	$4,700	1
SHD2	W/LIGHTS ETC			230.00 S.F.	$3,600	1
SHD2	W/LIGHTS ETC			120.00 S.F.	$1,900	1
LNT	LEAN-TO			120.00 S.F.	$600	1
LNT	LEAN-TO			120.00 S.F.	$600	1
TEN1	TENNIS COURT			1.00 UNITS	$28,800	1
PAV1	PAVING-ASPHALT			14000.00 S.F.	$46,600	1
SHD1	SHED FRAME			1500.00 S.F.	$22,300	1
PAT1	PATIO-AVG			750.00 S.F.	$4,900	1

Valuation History

Appraisal			
Valuation Year	**Improvements**	**Land**	**Total**
2020	$136,600	$6,429,900	$6,566,500
2019	$127,500	$5,060,200	$5,187,700
2018	$127,500	$5,060,200	$5,187,700

Assessment			
Valuation Year	**Improvements**	**Land**	**Total**
2020	$95,620	$4,500,930	$4,596,550
2019	$89,250	$3,542,140	$3,631,390
2018	$89,250	$3,542,140	$3,631,390

PHOTOGRAPHIC LOG

Client Name: Town of Fairfield	**Site Location:** Tunxis Hill Park, 225 Melville Avenue Fairfield, CT	**Project No.** 141.11342.00028

Photo No.	**Date:**
1	12/3/2021

Direction Photo Taken:
Northeast

Description:
Shallow, unnamed watercourse flowing through Wetland A upstream (southwest) of culvert conveying conveying flow to a pipe beneath the southern baseball field on site.

Photo No.	**Date:**
2	12/3/2021

Direction Photo Taken:
East

Description:
View of eastern (left bank, facing downstream) of watercourse within Wetland A, taken from western bank of the watercourse. Slightly overhanging bank densely vegetated with invasive Japanese knotweed.

PHOTOGRAPHIC LOG

Client Name: Town of Fairfield	**Site Location:** Tunxis Hill Park, 225 Melville Avenue Fairfield, CT	**Project No.** 141.11342.00028

Photo No.	**Date:**
3	12/3/2021

Direction Photo Taken:
Southwest

Description:
View upstream of unnamed watercourse from northern portion of Wetland A. The watercourse is somewhat obstructed in several locations by large anthropogenic and woody debris.

Photo No.	**Date:**
4	12/3/2021

Direction Photo Taken:
Northwest

Description:
Open canopy forested and scrub shrub wetland in the western portion of Wetland A with dense groundcover of invasive garlic-mustard.

TUNXIS HILL PARK (SITE 1)

225 MELVILLE AVENUE
FAIRFIELD, CONNECTICUT

1342-28
FLOODING MITIGATION ASSESSMENT
FEBRUARY 01, 2022

GENERAL NOTES

1. BOUNDARY AND TOPOGRAPHIC INFORMATION IS BASED UPON TOWN PROVIDED GIS.
2. INFORMATION REGARDING THE LOCATION OF EXISTING UTILITIES HAS BEEN BASED UPON AVAILABLE INFORMATION AND MAY BE INCOMPLETE, AND WHERE SHOWN SHOULD BE CONSIDERED APPROXIMATE. THE LOCATION OF ALL EXISTING UTILITIES SHOULD BE CONFIRMED PRIOR TO BEGINNING CONSTRUCTION. CALL "CALL BEFORE YOU DIG", 1-800-922-4455. ALL UTILITY LOCATIONS THAT DO NOT MATCH THE VERTICAL OR HORIZONTAL CONTROL SHOWN ON THE PLANS SHALL IMMEDIATELY BE BROUGHT TO THE ATTENTION OF THE ENGINEER FOR RESOLUTION.
3. SLR CONSULTING ACCEPTS NO RESPONSIBILITY FOR THE ACCURACY OF MAPS AND DATA WHICH HAVE BEEN SUPPLIED BY OTHERS.
4. INLAND WETLANDS AND WATERCOURSES ON SITE WERE FLAGGED BY MEGAN B. RAYMOND, CERTIFIED SOIL SCIENTIST FROM SLR CONSULTING ON MARCH 15, 2021.
5. THE EXACT LOCATION AND SIZE OF ELECTRIC, TELEPHONE AND CABLE TELEVISION ARE TO BE DETERMINED BY THE RESPECTIVE UTILITY COMPANIES.
6. ALL DIMENSIONS AND ELEVATIONS SHALL BE VERIFIED IN THE FIELD PRIOR TO CONSTRUCTION. ANY DISCREPANCIES SHALL BE BROUGHT TO THE ATTENTION OF THE ENGINEER.
7. SEDIMENT AND EROSION CONTROL MEASURES AS DEPICTED ON THESE PLANS AND DESCRIBED WITHIN THE SEDIMENT AND EROSION CONTROL NARRATIVE SHALL BE IMPLEMENTED AND MAINTAINED UNTIL PERMANENT COVER AND STABILIZATION IS ESTABLISHED. ALL SEDIMENT AND EROSION CONTROL MEASURES SHALL CONFORM TO THE "GUIDELINES FOR SOIL EROSION AND SEDIMENT CONTROL, CONNECTICUT - 2002, AND IN ALL CASES BEST MANAGEMENT PRACTICES SHALL PREVAIL.
8. ALL DISTURBED AREAS SHALL RECEIVE A MINIMUM OF 6" TOPSOIL AND BE SEEDED WITH GROUND COVER SEED MIX, AS SHOWN ON THE PLANS, ALL VEGETATIVE ESTABLISHMENT SHALL CONFORM TO THE "STANDARDS FOR ORGANIC LAND CARE, NORA CONNECTICUT 2011," AND IN ALL CASES BEST MANAGEMENT PRACTICES SHALL PREVAIL.
9. IN ALL CASES, TOPSOIL AND OTHER CONSTRUCTION MATERIALS SHALL BE DRAWN FROM THE ON-SITE STOCKPILES OF EXISTING MATERIAL. ONLY WHEN ON-SITE STOCKPILES HAVE BEEN USED SHALL MATERIAL BE IMPORTED TO THE SITE.
10. ALL STORM DRAIN PIPE HDPE UNLESS OTHERWISE INDICATED.
11. ALL PROPOSED CONTOURS AND SPOT ELEVATIONS INDICATE FINISHED GRADE.
12. ALL CONSTRUCTION MATERIALS AND METHODS SHALL CONFORM TO THE TOWN OF FAIRFIELD REQUIREMENTS AND TO THE APPLICABLE SECTIONS OF THE STATE OF CONNECTICUT DEPARTMENT OF TRANSPORTATION STANDARD SPECIFICATIONS FOR ROADS, BRIDGES, FACILITIES AND INCIDENTAL CONSTRUCTION, FORM 818 AND ADDENDUMS
13. THE PLANS REQUIRE A CONTRACTOR'S WORKING KNOWLEDGE OF LOCAL, MUNICIPAL, WATER AUTHORITY, AND STATE CODES FOR UTILITY SYSTEMS. ANY CONFLICTS BETWEEN MATERIALS AND LOCATIONS SHOWN, AND LOCAL REQUIREMENTS SHALL BE BROUGHT TO THE ATTENTION OF THE ENGINEER PRIOR TO THE EXECUTION OF WORK. THE ENGINEER WILL NOT BE HELD LIABLE FOR COSTS INCURRED TO IMPLEMENT OR CORRECT WORK WHICH DOES NOT CONFORM TO LOCAL CODE.
14. COMPLIANCE WITH THE PERMIT CONDITIONS IS THE RESPONSIBILITY OF BOTH THE CONTRACTOR AND THE PERMITTEE.
15. THE PROPERTY OWNER MUST MAINTAIN (REPAIR/REPLACE WHEN NECESSARY) THE SEDIMENT AND EROSION CONTROLS UNTIL ALL DEVELOPMENT ACTIVITY IS COMPLETED AND ALL DISTURBED AREAS ARE PERMANENTLY STABILIZED.

CONSTRUCTION SEQUENCE

1. PRIOR TO COMMENCEMENT OF WORK A PRECONSTRUCTION MEETING SHALL BE HELD WITH TOWN STAFF AND REPRESENTATIVES OF THE CONTRACTOR AND OWNER. AT THIS MEETING, ONE PERSON WILL BE PLACED IN CHARGE OF SEDIMENT AND EROSION CONTROL FOR THE ENTIRE SITE.
2. CONTRACTOR TO STAKE OUT LIMIT OF DISTURBANCE AND VEGETATION TO BE RETAINED. NO DISTURBANCE IS TO TAKE PLACE BEYOND THE LIMITS OF WORK SHOWN.
3. CONTRACTOR TO INSTALL SEDIMENT AND EROSION CONTROLS ALONG THE PERIMETER, AND STABILIZED CONSTRUCTION ENTRANCES.
4. CLEAR AND GRUB SITE AND STOCKPILE TOPSOIL. PLACE SEDIMENT FILTER FENCE AND HAYBALES AROUND STOCKPILES.
5. INSTALL STORMWATER PIPE AND STRUCTURES
6. INITIATE MASS EARTHWORK OPERATIONS AFTER ALL SILT FENCE & HAYBALES ARE INSTALLED
7. SLOPES ARE TO BE ESTABLISHED AS SOON AS PRACTICAL BEFORE UTILITY INSTALLATION. STABILIZE ALL SLOPES IMMEDIATELY AFTER THEIR ESTABLISHMENT.
8. THE SEDIMENT AND EROSION CONTROL PLAN SHALL BE MODIFIED BY THE CONTRACTOR AT THE DIRECTION OF THE ENGINEER AND DESIGNATED TOWN REPRESENTATIVE AS NECESSITATED BY CHANGING SITE CONDITIONS.

GENERAL CONSTRUCTION NOTES

1. SEDIMENT AND EROSION CONTROLS SHALL BE INSPECTED AT LEAST ONCE A WEEK AND WITHIN 24 HOURS OF THE END OF A STORM WITH A RAINFALL AMOUNT OF 0.5 INCH OR GREATER.
2. INSPECTION OF THE SITE FOR EROSION SHALL CONTINUE FOR A PERSON OF THREE MONTHS AFTER COMPETITION WHEN RAINFALLS OF ONE INCH OR MORE OCCUR.
3. THE SITE SHOULD BE KEPT CLEAN OF LOOSE DEBRIS, LITTER AND BUILDING MATERIALS SUCH THAT NONE OF THE ABOVE ENTER WATERS OR WETLANDS.
4. A COPY OF ALL PLANS AND REVISIONS, AND THE SEDIMENT AND EROSION CONTROL PLAN SHALL BE MAINTAINED ON-SITE AT ALL TIMES DURING CONSTRUCTION.

OPERATION AND MAINTENANCE PLAN (POST-CONSTRUCTION)

1. THE STORMWATER SYSTEM SHALL BE INSPECTED TWICE ANNUALLY AND AFTER ANY SPILLAGE OF OIL, GAS, OR OTHER CONTAMINANT SPILLS. SUBSEQUENT TO CONTAMINANT SPILLS, THE STORMWATER SYSTEM SHALL BE CLEANED IMMEDIATELY AND THE CONTENTS DISPOSED OF AT AN APPROVED OFF-SITE LOCATION.
2. A VEGETATIVE OR IMPROVED COVER SHALL BE MAINTAINED ON ALL EARTH SURFACES TO MINIMIZE SOIL EROSION. USE OF FERTILIZER SHOULD BE MINIMIZED AND APPLIED USING PRUDENT APPLICATION PROCEDURES.
3. A LOG OF ALL INSPECTION AND CLEANING SHALL BE MAINTAINED BY THE OWNER AND BE AVAILABLE FOR INSPECTION.
4. DURING CONSTRUCTION AND FOR SIX MONTHS AFTER PROJECT COMPLETION INSPECTION OF SEDIMENT AND EROSION CONTROL MEASURES SHALL BE MADE ON A WEEKLY BASIS AND AFTER RAINFALL EVENTS OF 1" OR GREATER. A LOG OF SUCH INSPECTIONS SHALL BE MAINTAINED AT THE SITE.

EARTHWORK SUMMARY:

LOCATION	CUT	FILL	NET
TOTAL SITE	30 C.Y.	2230 C.Y.	2200 C.Y.<FILL>

Know what's **below.**
Call before you dig.
www.cbyd.com

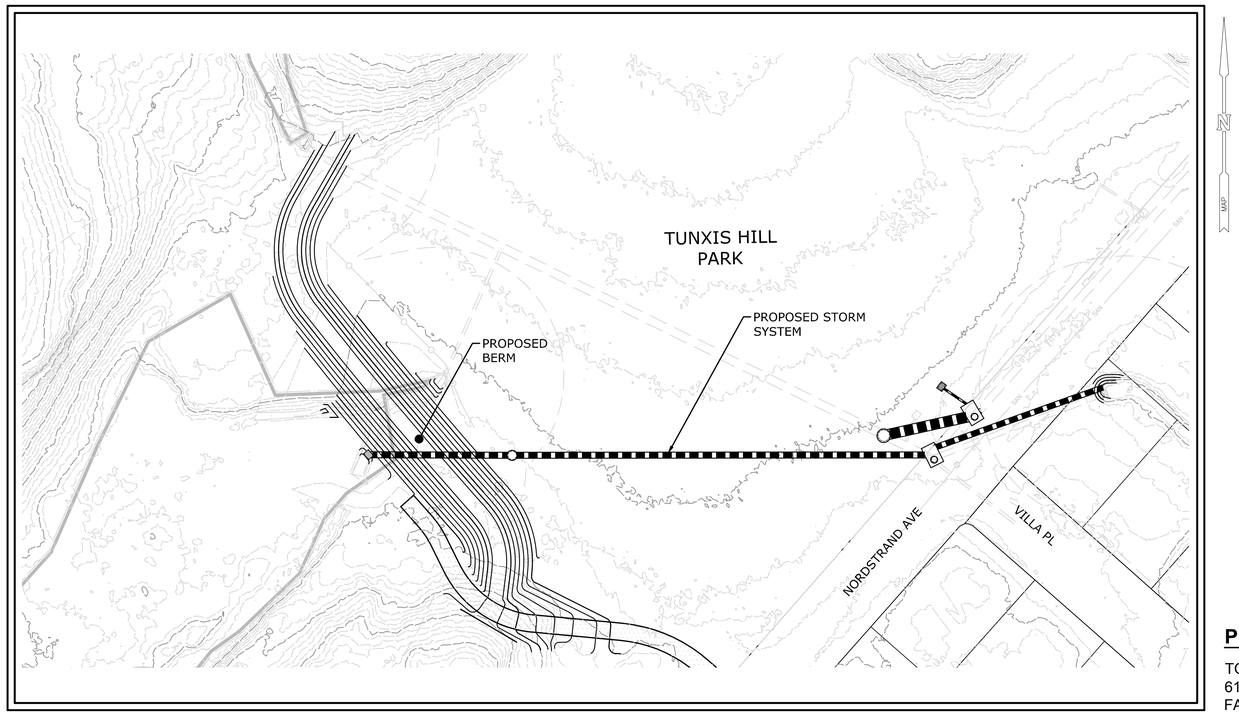

PROJECT SITE VICINITY MAP:

0' 25' 50'
0 1/2" 1"
SCALE 1" = 100'

PREPARED BY:

SLR

99 REALTY DRIVE
CHESHIRE, CT 06410
203.271.1773
SLRCONSULTING.COM

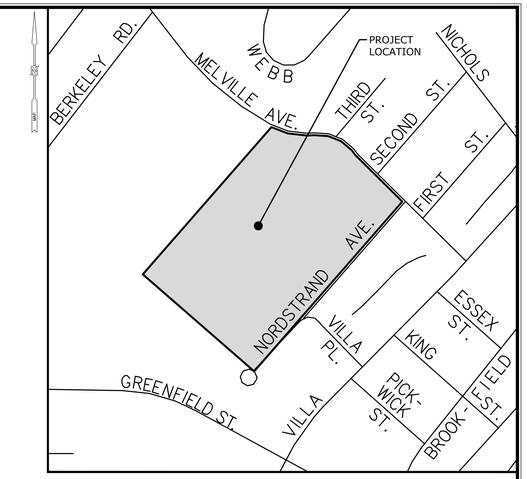

LOCATION MAP:

0' 150' 300'
0 1/2" 1"
SCALE 1" = 300'

LEGEND

EXISTING		PROPOSED
	STREET LINE	
	PROPERTY LINE	
	EASEMENT	
	SETBACK LINE	
70	MAJOR CONTOUR	70
68	MINOR CONTOUR	68
× 70.5	SPOT GRADE	+70.5
	WETLANDS	
	TREE LINE	
	TREE/SHRUB	
	STONEWALL	
	SITE LIGHT	
	HYDRANT	
	WATER METER	
WV	WATER VALVE	
GV	GAS VALVE	
	CATCH BASIN	
	MANHOLE/YARD DRAIN	
S S	SANITARY SEWER SERVICE/MAIN	SAN
	STORM DRAIN W/CATCH BASIN	
W W	WATER MAIN	W
	ELECTRICAL CONDUIT	E
	UTILITY POLE	
	TRAFFIC SIGN	
	MONUMENT	
	EDGE OF PAVEMENT W/CURB	

PREPARED FOR:

TOWN OF FAIRFIELD
611 OLD POST ROAD
FAIRFIELD, CT 06824

LIST OF DRAWINGS

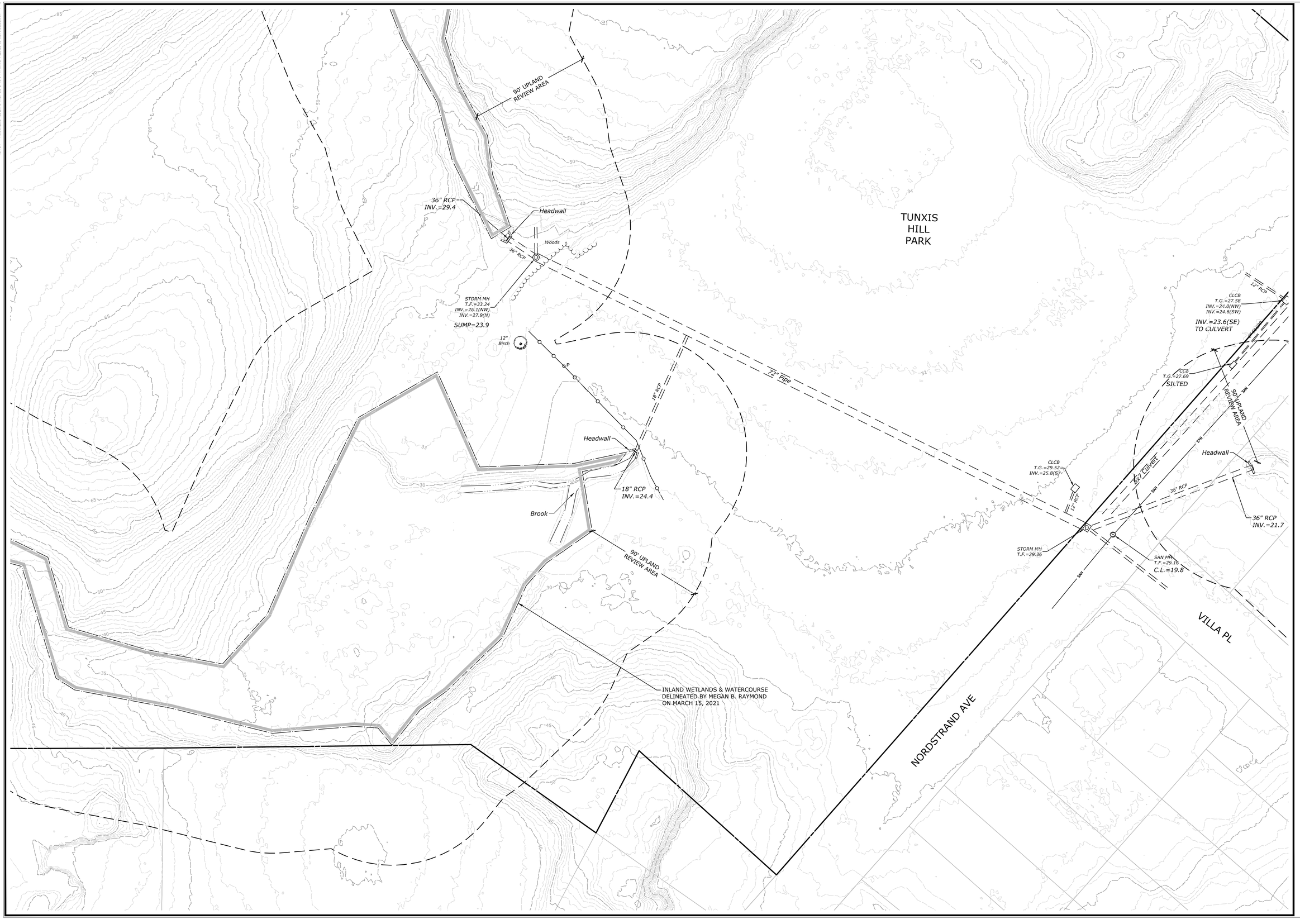

SLR

99 REALTY DRIVE
CHESHIRE, CT 06410
203.271.1773
SLRCONSULTING.COM

DESCRIPTION	DATE	BY

SITE PLAN - EXISTING CONDITIONS

TUNXIS HILL PARK

225 MELVILLE AVENUE
FAIRFIELD, CONNECTICUT

TDR	SWM	JCM
DESIGNED	DRAWN	CHECKED

SCALE: 1"=30'

DATE: FEBRUARY 01, 2022

PROJECT NO.: 1342-28

SHEET NO.: 2 OF 8

SHEET NAME: EX

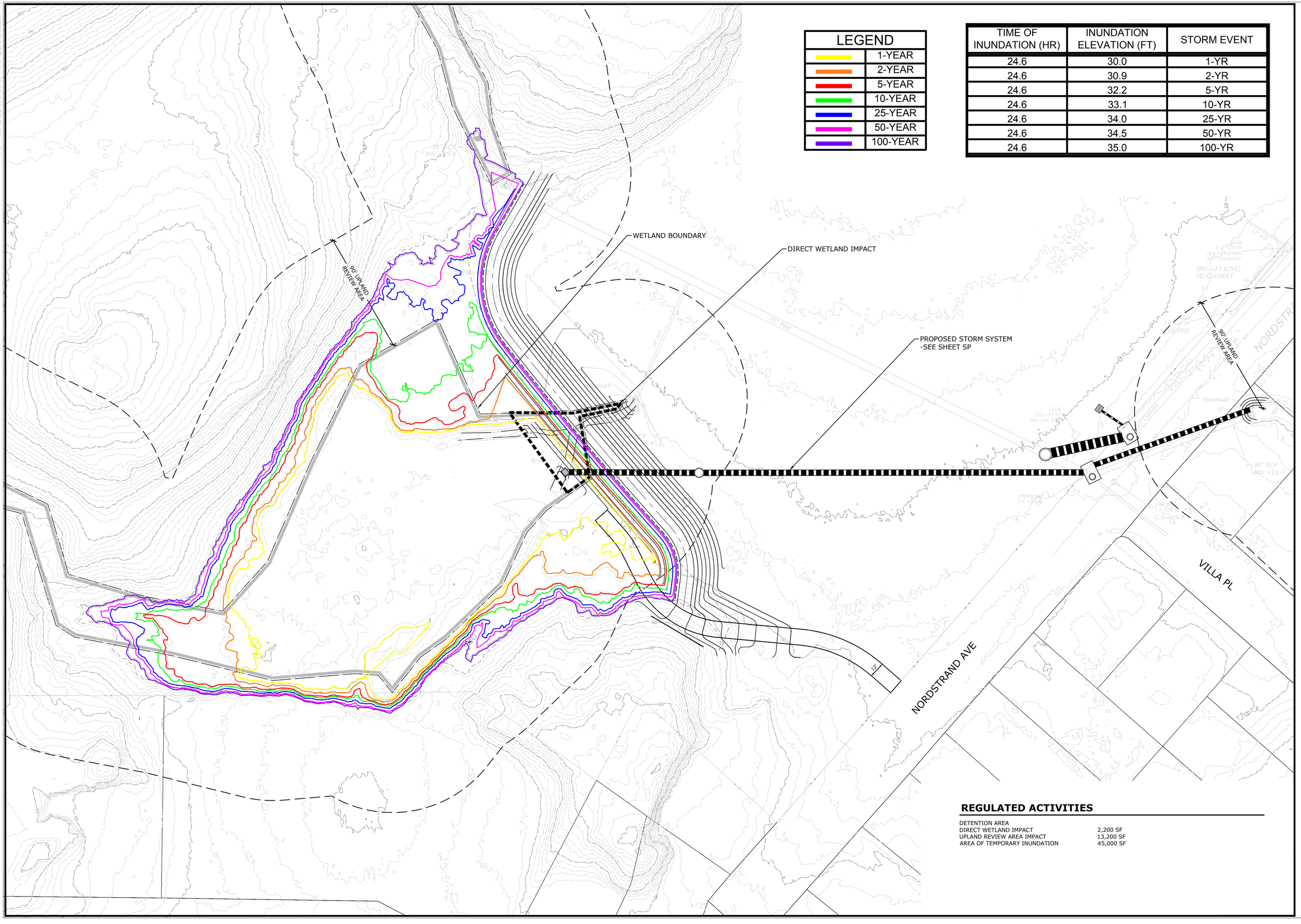

LEGEND

	1-YEAR
	2-YEAR
	5-YEAR
	10-YEAR
	25-YEAR
	50-YEAR
	100-YEAR

TIME OF INUNDATION (HR)	INUNDATION ELEVATION (FT)	STORM EVENT
24.6	30.0	1-YR
24.6	30.9	2-YR
24.6	32.2	5-YR
24.6	33.1	10-YR
24.6	34.0	25-YR
24.6	34.5	50-YR
24.6	35.0	100-YR

REGULATED ACTIVITIES

DETENTION AREA	
DIRECT WETLAND IMPACT	2,200 SF
UPLAND REVIEW AREA IMPACT	13,200 SF
AREA OF TEMPORARY INUNDATION	45,000 SF

SLR
99 REALTY DRIVE
CHESHIRE, CT 06410
203.271.1773
SLRCONSULTING.COM

DESCRIPTION	DATE	BY

SITE MAP
TUNXIS HILL PARK
225 MELVILLE AVENUE
FAIRFIELD, CONNECTICUT

SMM	SMM	EAH
DESIGNED	DRAWN	CHECKED

SCALE: 1"=30'

DATE: FEBRUARY 01, 2022

PROJECT NO.: 1342-28

SHEET NO.: 3 OF 8

SHEET NAME: SM

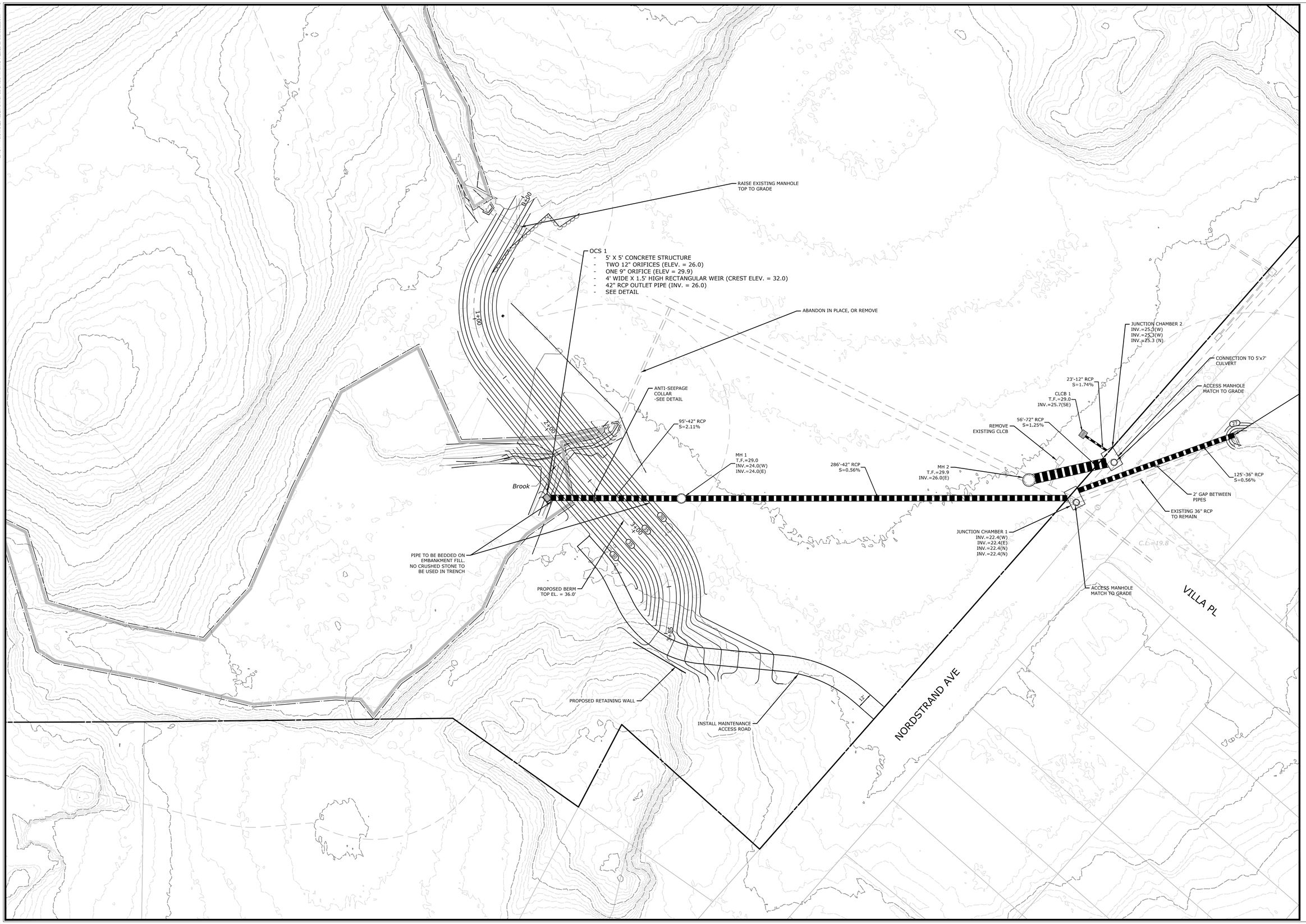

SLR

99 REALTY DRIVE
CHESHIRE, CT 06410
203.271.1773
SLRCONSULTING.COM

DESCRIPTION	DATE	BY

SITE PLAN

TUNXIS HILL PARK
FLOODING MITIGATION ASSESSMENT

225 MELVILLE AVENUE
FAIRFIELD, CONNECTICUT

SMM	SMM	EAH
DESIGNED	DRAWN	CHECKED

SCALE: 1"=30'

DATE: FEBRUARY 01, 2022

PROJECT NO.: 1342-28

SHEET NO.: 4 OF 8

SHEET NAME: SP

SOIL EROSION AND SEDIMENT CONTROL NARRATIVE

SEDIMENT AND EROSION CONTROL MEASURES AS DEPICTED ON THESE PLANS AND DESCRIBED WITHIN THE SEDIMENT AND EROSION CONTROL NARRATIVE SHALL BE IMPLEMENTED AND MAINTAINED UNTIL PERMANENT COVER AND STABILIZATION IS ESTABLISHED. ALL SEDIMENT AND EROSION CONTROL MEASURES SHALL CONFORM TO THE "GUIDELINES FOR SOIL EROSION AND SEDIMENT CONTROL, CONNECTICUT - 2002, TOWN OF FAIRFIELD REQUIREMENTS, AND IN ALL CASES BEST MANAGEMENT PRACTICES SHALL PREVAIL.

1.PURPOSE AND DESCRIPTION OF PROJECT
A.) THE CONSTRUCTION OF A BERM AND NEW STORM SYSTEM.
B.) DISTURBED AREA: ±0.407 AC

2.IDENTIFICATION OF EROSION AND SEDIMENT CONTROL CONCERNS
A.) CUTS AND FILLS ASSOCIATED WITH CONSTRUCTION.
B.) PROTECTION OF OFFSITE DRAINAGE SYSTEMS
C.) PROTECTION OF WETLANDS

3.IDENTIFICATION OF OTHER POSSIBLE PERMITS
THE PERMITS REQUIRED FOR THE PROJECT ARE LOCAL INLAND WETLANDS, PLANNING AND ZONING PERMITS.

EROSION CONTROL LEGEND

	CE — CONSTRUCTION ENTRANCE (50 L.F. MIN.)		IP — INLET PROTECTION
	HB — STACKED HAYBALES		STK — SOIL STOCKPILE AREA
	GSF — SEDIMENT FILTER FENCE		ECB — EROSION CONTROL BLANKET

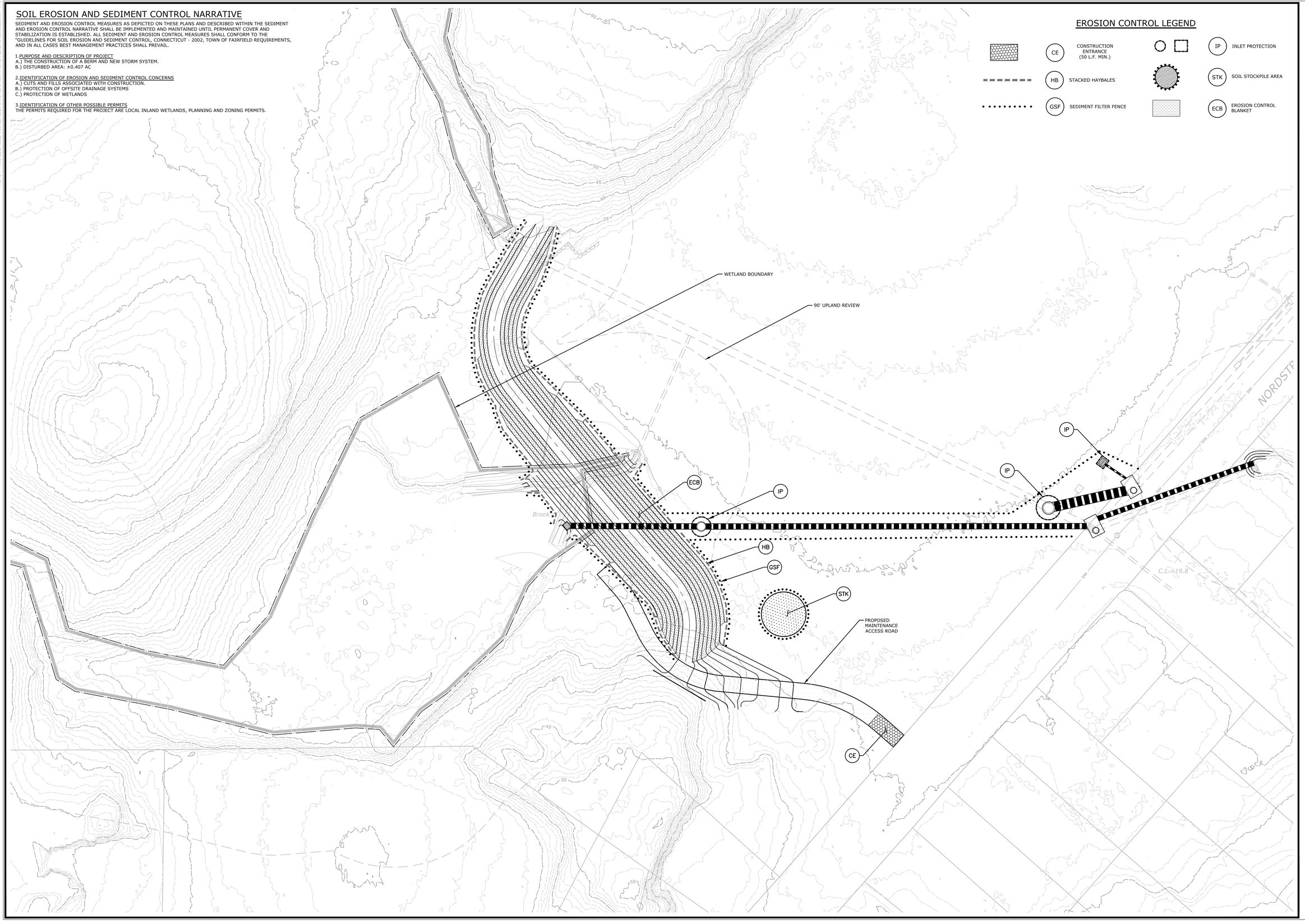

SLR
99 REALTY DRIVE
CHESHIRE, CT 06410
203.271.1773
SLRCONSULTING.COM

DESCRIPTION	DATE	BY

SEDIMENT & EROSION CONTROLS

TUNXIS HILL PARK

225 MELVILLE AVENUE
FAIRFIELD, CONNECTICUT

SMM	KJG	EAH
DESIGNED	DRAWN	CHECKED

SCALE: 1"=30'

DATE: FEBRUARY 01, 2022

PROJECT NO.: 1342-28

SHEET NO.: 5 OF 8

SHEET NAME: SE-1

SEDIMENT & EROSION CONTROL SPECIFICATIONS

THESE GUIDELINES SHALL APPLY TO ALL WORK CONSISTING OF ANY AND ALL TEMPORARY AND/OR PERMANENT MEASURES TO CONTROL WATER POLLUTION AND SOIL EROSION, AS MAY BE REQUIRED, DURING THE CONSTRUCTION OF THE PROJECT.

IN GENERAL, ALL CONSTRUCTION ACTIVITIES SHALL PROCEED IN SUCH A MANNER SO AS NOT TO POLLUTE ANY WETLANDS, WATERCOURSE, WATER BODY, AND CONDUIT CARRYING WATER, ETC. THE CONTRACTOR SHALL LIMIT, INSOFAR AS POSSIBLE, THE SURFACE AREA OF EARTH MATERIALS EXPOSED BY CONSTRUCTION METHODS AND IMMEDIATELY PROVIDE PERMANENT AND TEMPORARY POLLUTION CONTROL MEASURES TO PREVENT CONTAMINATION OF ADJACENT WETLANDS, WATERCOURSES, AND WATER BODIES, AND TO PREVENT, INSOFAR AS POSSIBLE, EROSION ON THE SITE.

LAND GRADING

1. THE RESHAPING OF THE GROUND SURFACE BY EXCAVATION AND FILLING OR A COMBINATION OF BOTH, TO OBTAIN PLANNED GRADES, SHALL PROCEED IN ACCORDANCE WITH THE FOLLOWING CRITERIA:

a. THE PERMANENT CUT FACE OF EARTH EXCAVATION SHALL NOT BE STEEPER THAN TWO HORIZONTAL TO ONE VERTICAL (2:1).

b. THE PERMANENT EXPOSED FACES OF EARTHEN FILLS SHALL NOT BE STEEPER THAN TWO HORIZONTAL TO ONE VERTICAL (2:1).

c. THE CUT FACE OF ROCK EXCAVATION SHALL NOT BE STEEPER THAN ONE HORIZONTAL TO FOUR VERTICAL (1:4).

d. PROVISION SHOULD BE MADE TO CONDUCT SURFACE WATER SAFELY TO STORM DRAINS TO PREVENT SURFACE RUNOFF FROM DAMAGING CUT FACES AND FILL SLOPES.

e. EXCAVATIONS SHOULD NOT BE MADE SO CLOSE TO PROPERTY LINES AS TO ENDANGER ADJOINING PROPERTY WITHOUT PROTECTING SUCH PROPERTY FROM EROSION, SLIDING, SETTLING, OR CRACKING.

f. NO FILL SHOULD BE PLACED WHERE IT WILL SLIDE OR WASH UPON THE PREMISES OF ANOTHER OWNER OR UPON ADJACENT WETLANDS, WATERCOURSES, OR WATER BODIES BODIES.

g. PRIOR TO ANY REGRADING, A STABILIZED CONSTRUCTION ENTRANCE SHALL BE PLACED AT THE ENTRANCE TO THE WORK AREA IN ORDER TO REDUCE MUD AND OTHER SEDIMENTS FROM LEAVING THE SITE.

TOPSOILING

GENERAL:

1. TOPSOIL SHALL BE SPREAD OVER ALL EXPOSED AREAS IN ORDER TO PROVIDE A SOIL MEDIUM HAVING FAVORABLE CHARACTERISTICS FOR THE ESTABLISHMENT, GROWTH, AND MAINTENANCE OF VEGETATION.
2. UPON ATTAINING FINAL UPGRADES, SCARIFY SURFACE TO PROVIDE A GOOD BOND WITH TOPSOIL.
3. REMOVE ALL LARGE STONES, TREE LIMBS, ROOTS AND CONSTRUCTION
4. APPLY LIME ACCORDING TO SOIL TEST OR AT THE RATE OF TWO (2) TONS PER ACRE.

MATERIAL:

1. TOPSOIL SHOULD HAVE PHYSICAL, CHEMICAL, AND BIOLOGICAL CHARACTERISTICS FAVORABLE TO THE GROWTH OF PLANTS.
2. TOPSOIL SHOULD HAVE A SANDY OR LOAMY TEXTURE.
3. TOPSOIL SHOULD BE RELATIVELY FREE OF SUBSOIL MATERIAL AND MUST BE FREE OF STONES (OVER 1" IN DIAMETER), LUMPS OF SOIL, ROOTS, TREE LIMBS, TRASH, OR CONSTRUCTION DEBRIS. IT SHOULD BE FREE OF ROOTS OR RHIZOMES SUCH AS THISTLE, KNOTGRASS, AND QUAKERS.
4. AN ORGANIC MATTER CONTENT OF SIX PERCENT (6%) IS REQUIRED. AVOID LIGHT COLORED SUBSOIL MATERIAL.
5. SOLUBLE SALT CONTENT OF OVER 500 PARTS PER MILLION (PM) IS LESS SUITABLE. AVOID TIDAL MARSH SOILS BECAUSE OF HIGH SALT CONTENT AND SULFUR ACIDITY.
6. THE pH SHOULD BE MORE THAN 6.0. IF LESS, ADD LIME TO INCREASE pH TO AN ACCEPTABLE LEVEL.

APPLICATION:

1. AVOID SPREADING WHEN TOPSOIL IS WET OR FROZEN.
2. SPREAD TOPSOIL UNIFORMLY TO A DEPTH OF AT LEAST SIX INCHES (6") OR TO THE DEPTH SHOWN ON THE LANDSCAPING PLANS.

TEMPORARY VEGETATIVE COVER

GENERAL:

1. TEMPORARY VEGETATIVE COVER SHALL BE ESTABLISHED ON ALL UNPROTECTED AREAS THAT PRODUCE SEDIMENT, AREAS WHERE FINAL GRADING HAS BEEN COMPLETED, AND AREAS WHERE THE ESTIMATED PERIOD OF BARE SOIL EXPOSURE IS MORE THAN 30 DAYS. AREAS TO BE LEFT EXPOSED FOR MORE THAN 30 DAYS SHALL BE SEEDED WITHIN 7 DAYS OF SUSPENSION OF CONSTRUCTION ACTIVITIES. TEMPORARY VEGETATIVE COVER SHALL BE APPLIED IF AREAS WILL NOT BE PERMANENTLY SEEDED BY SEPTEMBER 1.

SITE PREPARATION:

1. INSTALL REQUIRED SURFACE WATER CONTROL MEASURES.
2. REMOVE LOOSE ROCK, STONE, AND CONSTRUCTION DEBRIS FROM AREA.
3. APPLY LIME ACCORDING TO SOIL TEST OR AT A RATE OF ONE (1) TON OF GROUND DOLOMITIC LIMESTONE PER ACRE (5 LBS. PER 100 SQ. FT.).
4. APPLY FERTILIZER ACCORDING TO SOIL TEST OR AT THE RATE OF 300 LBS. OF 10-10-10 PER ACRE (7 LBS. PER 1,000 SQ. FT.) AND SECOND APPLICATION OF 200 LBS. OF 10-10-10- (5 LBS. PER 1,000 SQ. FT.) WHEN GRASS IS FOUR INCHES (4") TO SIX INCHES (6") HIGH. APPLY ONLY WHEN GRASS IS DRY.
5. UNLESS HYDROSEEDED, WORK IN LIME AND FERTILIZER TO A DEPTH OF FOUR (4") INCHES USING A DISK OR ANY SUITABLE EQUIPMENT.
6. TILLAGE SHOULD ACHIEVE A REASONABLY UNIFORM LOOSE SEEDBED. WORK ON CONTOUR IF SITE IS SLOPING.

ESTABLISHMENT:

1. SELECT APPROPRIATE SPECIES FOR THE SITUATION. NOTE RATES AND SEEDING DATES (SEE VEGETATIVE COVER SELECTION & MULCHING SPECIFICATION BELOW).
2. APPLY SEED UNIFORMLY ACCORDING TO THE RATE INDICATED BY BROADCASTING, DRILLING, OR HYDRAULIC APPLICATION.
3. UNLESS HYDROSEEDED, COVER RYEGRASS SEEDS WITH NOT MORE THAN 1/4 INCH OF SOIL USING SUITABLE EQUIPMENT.
4. MULCH IMMEDIATELY AFTER SEEDING IF REQUIRED. (SEE VEGETATIVE COVER SELECTION & MULCHING SPECIFICATION BELOW.) APPLY STRAW OR HAY MULCH AND ANCHOR TO SLOPES GREATER THAN 3% OR WHERE CONCENTRATED FLOW WILL OCCUR.

PERMANENT VEGETATIVE COVER

GENERAL:

1. PERMANENT VEGETATIVE COVER SHALL BE ESTABLISHED AS VARIOUS SECTIONS OF THE PROJECT ARE COMPLETED IN ORDER TO STABILIZE THE SOIL, REDUCE DOWNSTREAM DAMAGE FROM SEDIMENT AND RUNOFF, AND TO ENHANCE THE AESTHETIC NATURE OF THE SITE. IT WILL BE APPLIED TO ALL CONSTRUCTION AREAS SUBJECT TO EROSION WHERE FINAL GRADING HAS BEEN COMPLETED AND A PERMANENT COVER IS NEEDED SHALL BE SEEDED WITHIN 7 DAYS OF ESTABLISHMENT OF FINAL GRADES.

SITE PREPARATION:

1. INSTALL REQUIRED SURFACE WATER CONTROL MEASURES.
2. REMOVE LOOSE ROCK, STONE, AND CONSTRUCTION DEBRIS FROM AREA.
3. PERFORM ALL PLANTING OPERATIONS PARALLEL TO THE CONTOURS OF THE SLOPE.
4. APPLY TOPSOIL AS INDICATED ELSEWHERE HEREIN.
5. APPLY FERTILIZER ACCORDING TO SOIL TEST OR:

° SPREAD SEEDING: WORK DEEPLY IN SOIL, BEFORE SEEDING, 300 LBS. OF 10-10-10 FERTILIZER PER ACRE (7 LBS. PER 1,000 SQ. FT.); THEN SIX (6) TO EIGHT (8) WEEKS LATER, APPLY ON THE SURFACE AN ADDITIONAL 300 LBS. OF 10-10-10 FERTILIZER PER ACRE. AFTER SEPTEMBER 1, TEMPORARY VEGETATIVE COVER SHALL BE APPLIED.

° FALL SEEDING: WORK DEEPLY IN SOIL, BEFORE SEEDING, 600 LBS. OF 10-10-10 FERTILIZER PER ACRE (14 LBS. PER 1,000 SQ. FT.).

VEGETATIVE COVER SELECTION & MULCHING

TEMPORARY VEGETATIVE COVER:

PERENNIAL RYEGRASS 3 LBS./1,000 SQ.FT.
(LOLIUM PERENNE)

* PERMANENT VEGETATIVE COVER:

BARON KENTUCKY BLUEGRASS	60%
JAMESTOWN II CHEWINGS FESCUE	20%
PALMER PERENNIAL RYEGRASS	20%

* LOFTS - "TRIPLEX GENERAL" MIX OR APPROVED EQUAL.
RECOMMENDED TIME SEEDING. 5 LB./1000 S.F. SEEDING RATE.

SPRING SEEDING: 4/1 to 5/31

FALL SEEDING: 8/16 to 10/15

TEMPORARY MULCHING:

STRAY OR HAY 70-90 LBS./1,000 SQ.FT.
(TEMPORARY VEGETATIVE AREAS)

WOOD FIBER IN HYDROMULCH SLURRY 25-50 LBS./1,000 SQ. FT.

ESTABLISHMENT:

1. SMOOTH AND FIRM SEEDBED WITH CULTIPACKER OR OTHER SIMILAR EQUIPMENT PRIOR TO SEEDING (EXCEPT WHEN HYDROSEEDING).
2. SELECT ADAPTED SEED MIXTURE FOR THE SPECIFIC SITUATION. NOTE RATES AND THE SEEDING DATES (SEE VEGETATIVE COVER SELECTION & MULCHING SPEC. BELOW).
3. APPLY SEED UNIFORMLY ACCORDING TO RATE INDICATED, BY BROADCASTING, DRILLING, OR HYDRAULIC APPLICATION.
4. COVER GRASS AND LEGUME SEED WITH NOT MORE THAN 1/4 INCH OF SOIL WITH SUITABLE EQUIPMENT (EXCEPT WHEN HYDROSEEDING).
5. MULCH IMMEDIATELY AFTER SEEDING, IF REQUIRED, ACCORDING TO TEMPORARY MULCHING SPECIFICATIONS. (SEE VEGETATIVE COVER SELECTION & MULCHING SPECIFICATION BELOW).
6. USE PROPER INOCULANT ON ALL LEGUME SEEDINGS, USE FOUR (4) TIMES NORMAL RATES WHEN HYDROSEEDING.
7. USE SOD WHERE THERE IS A HEAVY CONCENTRATION OF WATER AND IN CRITICAL AREAS WHERE IT IS IMPORTANT TO GET A QUICK VEGETATIVE COVER TO PREVENT EROSION.

MAINTENANCE:

1. TEST FOR SOIL ACIDITY LIME AS REQUIRED.
2. ON SITES WHERE GRASSES PREDOMINATE, BROADCAST ANNUALLY 500 POUNDS OF 10-10-10 FERTILIZER PER ACRE (12 LBS. PER 1,000 SQ. FT.) OR AS NEEDED ACCORDING TO ANNUAL SOIL TESTS.
3. ON SITES WHERE LEGUMES PREDOMINATE, BROADCAST AS INDICATED BY SOIL TEST 300 POUNDS OF 0-20-20 OR EQUIVALENT PER ACRE (8 LBS PER 1,000 SQ. FT.).

EROSION CHECKS

GENERAL:

1. TEMPORARY PERVIOUS BARRIERS USING BALES OF HAY OR STRAW, HELD IN PLACE WITH STAKES DRIVEN THROUGH THE BALES AND INTO THE GROUND OR GEOTEXTILE FABRIC FASTENED TO A FENCE POST AND BURIED INTO THE GROUND, SHALL BE INSTALLED AND MAINTAINED AS REQUIRED TO CHECK EROSION AND REDUCE SEDIMENTATION.

CONSTRUCTION:

1. BALES SHOULD BE PLACED IN A ROW WITH ENDS TIGHTLY ABUTTING THE ADJACENT BALES.
2. EACH BALE SHALL BE EMBEDDED INTO THE SOIL A MINIMUM OF FOUR (4") INCHES.
3. BALES SHALL BE SECURELY ANCHORED IN PLACE BY WOOD STAKES OR REINFORCEMENT BARS DRIVEN THROUGH THE BALES AND INTO THE GROUND. THE FIRST STAKE IN EACH BALE SHALL BE ANGLED TOWARD THE PREVIOUSLY LAID BALE TO FORCE BALES TOGETHER.
4. GEOTEXTILE FABRIC SHALL BE SECURELY ANCHORED AT THE TOP OF A THREE FOOT (3') HIGH FENCE AND BURIED A MINIMUM OF FOUR INCHES (4") TO THE SOIL. SEAMS BETWEEN SECTIONS OF FILTER FABRIC SHALL OVERLAP A MINIMUM OF TWO FEET (2').

INSTALLATION AND MAINTENANCE:

1. BALED HAY EROSION BARRIERS SHALL BE INSTALLED AT ALL STORM SEWER INLETS.
2. BALED HAY EROSION BARRIERS AND GEOTEXTILE FENCE SHALL BE INSTALLED AT THE LOCATION INDICATED ON THE PLAN AND IN ADDITIONAL AREAS AS MAY BE DEEMED APPROPRIATE DURING CONSTRUCTION.
3. ALL EROSION CHECKS SHALL BE MAINTAINED UNTIL ADJACENT AREAS ARE STABILIZED.
4. INSPECTION SHALL BE FREQUENT (AT MINIMUM MONTHLY AND BEFORE AND AFTER HEAVY RAIN) AND REPAIR OR REPLACEMENT SHALL BE MADE PROMPTLY AS NEEDED.
5. EROSION CHECKS SHALL BE REMOVED WHEN THEY HAVE SERVED THEIR USEFULNESS SO AS NOT TO BLOCK OR IMPEDE STORM WATER FLOW OR DRAINAGE.

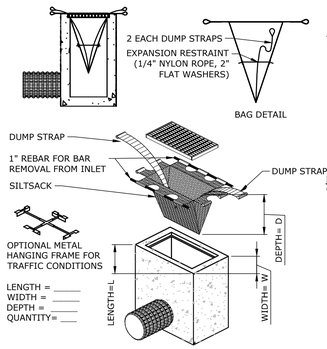

INLET SEDIMENT CONTROL DEVICE
NOT TO SCALE

SILTSACK
SPECIFICATIONS

NOTES:
1. THE SILTSACK WILL BE MANUFACTURED FROM A WOVEN POLYPROPYLENE FABRIC THAT MEETS OR EXCEEDS THE FOLLOWING SPECIFICATIONS.

REGULAR FLOW SILTSACK
(FOR AREAS OF LOW TO MODERATE PRECIPITATION AND RUN-OFF)

PROPERTIES	TEST METHOD	UNITS
GRAB TENSILE STRENGTH	ASTM D-4632	300 LBS
GRAB TENSILE ELONGATION	ASTM D-4632	20%
PUNCTURE	ASTM D-4833	120 LBS
MULLEN BURST	ASTM D-3786	800 PSI
TRAPEZOID TEAR	ASTM D-4533	120 LBS
UV RESISTANCE	ASTM D-4355	80%
APPARENT OPENING SIZE	ASTM D-4751	40 US SIEVE
FLOW RATE	ASTM D-4491	40GAL/MIN/SQ FT
PERMITTIVITY	ASTM D-4491	0.55 SEC-1

HI-FLOW SILTSACK
(FOR AREAS OF MODERATE TO HEAVY PRECIPITATION AND RUN-OFF)

PROPERTIES	TEST METHOD	UNITS
GRAB TENSILE STRENGTH	ASTM D-4632	265 LBS
GRAB TENSILE ELONGATION	ASTM D-4632	20%
PUNCTURE	ASTM D-4833	135 LBS
MULLEN BURST	ASTM D-3786	420 PSI
TRAPEZOID TEAR	ASTM D-4533	45 LBS
UV RESISTANCE	ASTM D-4355	90%
APPARENT OPENING SIZE	ASTM D-4751	20 US SIEVE
FLOW RATE	ASTM D-4491	200 GAL/MIN/SQ FT
PERMITTIVITY	ASTM D-4491	1.5 SEC-1

OIL- ABSORBANT SILTSACK
(FOR AREAS WHERE THERE IS A CONCERN FOR OIL RUN-OFF OR SPILLS)

DEPENDING ON YOUR PARTICULAR APPLICATION, THE SILTSACK CAN BE MADE FROM EITHER ONE OF THE ABOVE FABRICS WITH AND OIL-ABSORBANT PILLOW INSERT OR, MADE COMPLETELY FROM AN OIL-ABSORBANT SILTSACK, WITH A WOVEN PILLOW INSERT.

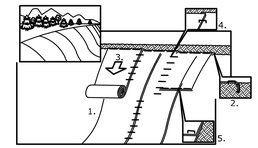

NOTES:
1. PREPARE SOIL BEFORE INSTALLING BLANKETS, INCLUDING APPLICATION OF LIME, FERTILIZER, AND SEED. NOTE: WHEN USING SCC225, DO NOT SEED PREPARED AREA. SCC225 MUST BE INSTALLED WITH PAPER SIDE DOWN.
2. BEGIN AT THE TOP OF THE SLOPE BY ANCHORING THE BLANKET IN A 6" DEEP BY 6" WIDE TRENCH. BACKFILL AND COMPACT THE TRENCH AFTER STAPLING.
3. ROLL THE BLANKETS DOWN THE SLOPE IN THE DIRECTION OF THE WATER FLOW.
4. THE EDGES OF PARALLEL BLANKETS MUST BE STAPLED WITH APPROXIMATELY 2" OVERLAP.
5. WHEN BLANKETS MUST BE SPLICED DOWN THE SLOPE, PLACE BLANKETS END OVER END (SHINGLE STYLE) WITH APPROXIMATELY 6" OVERLAP. STAPLE THROUGH OVERLAP AREA, APPROXIMATELY 12" APART.

REFER TO GENERAL STAPLE PATTERN GUIDE IN NORTH AMERICAN GREEN CATALOG FOR CORRECT STAPLE PATTERN RECOMMENDATIONS FOR SLOPE INSTALLATIONS.

APPLICATION OF EROSION CONTROL BLANKET ON SLOPES
NOT TO SCALE

WATER CONTROL PLAN

1. INSTALL SEDIMENT AND EROSION CONTROL MEASURES
2. CONSTRUCT MAINTENANCE ACCESS ROAD
3. INSTALL PROPOSED STORM SYSTEM
4. REDIRECT FLOW TOWARD OUTLET CONTROL STRUCTURE
5. CONSTRUCT EMBANKMENT

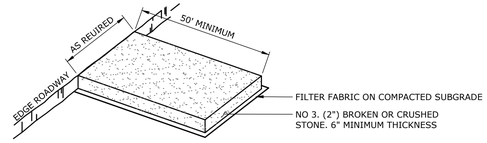

NOTES:
1. CONSTRUCTION ENTRANCE PAD SHALL BE INSTALLED AND MAINTAINED DURING OPERATIONS WHICH GENERATE VEHICULAR TRACKING OF MUD.

CONSTRUCTION ENTRANCE PAD
NOT TO SCALE

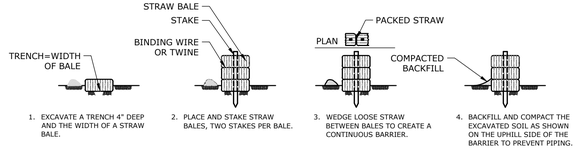

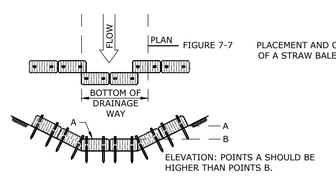

FIGURE 7-7 PLACEMENT AND CONSTRUCTION OF A STRAW BALE BARRIER

ELEVATION: POINTS A SHOULD BE HIGHER THAN POINTS B.

PLACEMENT & CONSTRUCTION OF A HAY BALE BARRIER
NOT TO SCALE

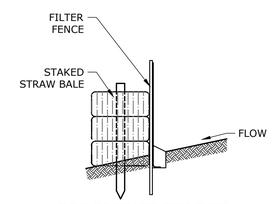

SEDIMENT FILTER FENCE AND HAY BALE
NOT TO SCALE

EROSION CONTROL MAINTENANCE INTERVALS

EROSION CONTROL MEASURE	CONTROL OBJECTIVE	INSPECTION/MAINTENANCE	FAILURE INDICATORS	REMOVAL
SILT FENCE (SF) (RELATED: IP, STK)	- INTERCEPT, AND REDIRECT/DETAIN SMALL AMOUNTS OF SEDIMENT FROM SMALL DISTURBED AREAS. - DECREASE VELOCITY OF SHEET FLOW. - PROTECT SENSITIVE SLOPES OR SOILS FROM EXCESSIVE WATER FLOW.	INSPECT AT LEAST ONCE A WEEK AND WITHIN 24 HOURS OF THE END OF A STORM WITH A RAINFALL OF 0.5 INCHES OR MORE. ACCUMULATED SEDIMENT MUST BE REMOVED ONCE ITS DEPTH IS EQUAL TO ½ THE TRENCH HEIGHT. INSPECT FREQUENTLY DURING PUMPING OPERATIONS IF USED FOR DEWATERING OPERATIONS.	- PHYSICAL DAMAGE OR DECOMPOSITION - EVIDENCE OF OVERTOPPED OR UNDERCUT FENCE - EVIDENCE OF SIGNIFICANT FLOWS EVADING CAPTURE - REPETITIVE FAILURE	SILT FENCE MAY BE REMOVED AFTER UPHILL AND SENSITIVE AREAS HAVE BEEN PERMANENTLY STABILIZED.
HAY BALES (HB)	- INTERCEPT, AND REDIRECT/DETAIN SMALL AMOUNTS OF SEDIMENT FROM SMALL DISTURBED AREAS. - DECREASE VELOCITY OF SHEET FLOW. - PROTECT SENSITIVE SLOPES OR SOILS FROM EXCESSIVE WATER FLOW.	INSPECT AT LEAST ONCE A WEEK AND WITHIN 24 HOURS OF THE END OF A STORM WITH A RAINFALL OF 0.5 INCHES OR MORE. ACCUMULATED SEDIMENT MUST BE REMOVED ONCE THE DEPTH OF SEDIMENT IS EQUAL TO ½ THE HEIGHT OF THE BARRIER. INSPECT FREQUENTLY DURING PUMPING OPERATIONS IF USED FOR DEWATERING OPERATIONS.	- PHYSICAL DAMAGE OR DECOMPOSITION - EVIDENCE OF OVERTOPPED OR UNDERCUT FENCE - EVIDENCE OF SIGNIFICANT FLOWS EVADING CAPTURE - REPETITIVE FAILURE	HAY BALES MAY BE REMOVED AFTER UPHILL AREAS HAVE BEEN PERMANENTLY STABILIZED.
CONSTRUCTION ENTRANCE (CE)	- REDUCE THE TRACKING OF SEDIMENT OFF-SITE ONTO PAVED SURFACES.	INSPECT AT THE END OF EACH WORK DAY AND IMMEDIATELY REPAIR DAMAGES. PERIODIC ADDITION OF STONE, OR LENGTHENING OF ENTRANCE MAY BE REQUIRED AS CONDITIONS DEMAND. ALL SEDIMENT SPILLED, DROPPED, WASHED, OR TRACKED ONTO PAVED SURFACES AS A RESULT OF INEFFICIENCY OF CONSTRUCTION ENTRANCE SHALL BE IMMEDIATELY REMOVED.	- SEDIMENT IN ROADWAY ADJACENT TO SITE	CONSTRUCTION ENTRANCE MAY BE REMOVED ONCE THE SITE HAS BEEN PERMANENTLY STABILIZED, AND ALL OTHER SECTIONS OF ROADWAY HAVE BEEN PERMANENTLY PAVED.
CATCH BASIN INLET PROTECTION (IP)	- PROHIBIT SILT IN CONSTRUCTION-RELATED RUNOFF FROM ENTERING STORM DRAINAGE SYSTEM.	INSPECT AFTER ANY RAIN EVENT. IF FILTER BAG INSIDE CATCH BASIN CONTAINS MORE THAN 6' OF SEDIMENT, REMOVE SEDIMENT FROM BAG. CHECK SURROUNDING SILT FENCE AND HAY BALES PER NOTED ABOVE.	- RIPPED BAG - FAILED HAY BALES / SILT FENCE - SIGNIFICANT SILT PRESENCE IN STORM DRAINAGE SYSTEM OUTFLOW.	INLET PROTECTION MAY BE REMOVED ONCE THE SITE HAS BEEN PERMANENTLY STABILIZED, AND ALL SECTIONS OF ROADWAY HAVE BEEN PERMANENTLY PAVED.
STOCKPILE PROTECTION (STK)	- RETAIN SOIL STOCKPILE IN LOCATIONS SPECIFIED, AND REDUCE WATER-TRANSPORT.	INSPECT SILT FENCE AT THE END OF EACH WORK DAY AND IMMEDIATELY REPAIR DAMAGES. PERIODIC REINFORCEMENT OF SILT FENCE, OR ADDITION OF HAY BALES MAY BE NECESSARY.	- EVIDENCE OF STOCK PILE DIMINISHING DUE TO RAIN EVENTS - FAILURE OF SILT FENCE	STOCKPILE PROTECTION MAY BE REMOVED ONCE THE STOCKPILE IS USED OR REMOVED.

SLR
99 REALTY DRIVE
CHESHIRE, CT 06410
203.271.1773
SLRCONSULTING.COM

DESCRIPTION	DATE	BY

SEDIMENT & EROSION CONTROLS NOTES & DETAILS

TUNXIS HILL PARK
FLOODING MITIGATION ASSESSMENT
225 MELVILLE AVENUE
FAIRFIELD, CONNECTICUT

DESIGNED	DRAWN	CHECKED
---	---	---

SCALE: NOT TO SCALE
DATE: FEBRUARY 01, 2022
PROJECT NO.: 1342-28
SHEET NO.: 6 OF 8
SHEET NAME: SE-2

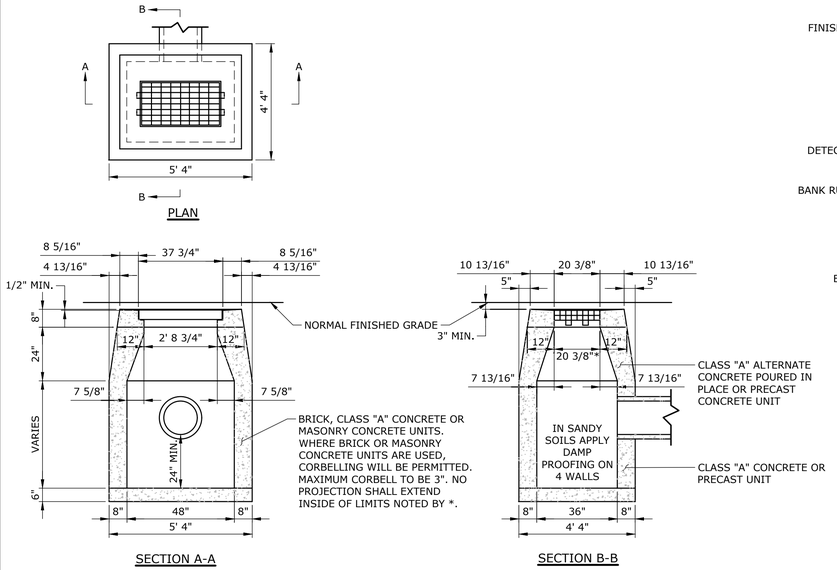

NOTES:

1. WHERE PRECAST CONCRETE UNIT IS USED FOR SUMP, THE TOP OF THE UNIT SHALL BE AT LEAST 6" BELOW THE BOTTOM OF THE PIPE OUTLETTING FROM THE CATCH BASIN.

TYPE "C-L" CATCH BASIN

NOT TO SCALE

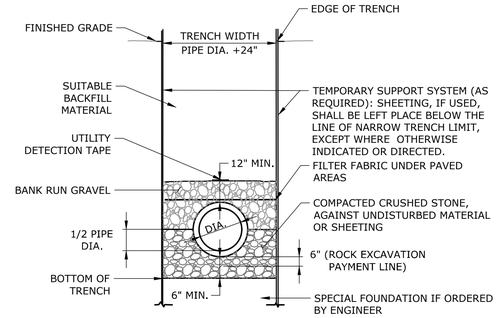

UTILITY TRENCH

NOT TO SCALE

FORMATION OF EMBANKMENTS FOR STORMWATER BASINS

1. MATERIALS

ALL FILL MATERIALS SHALL BE OBTAINED FROM REQUIRED EXCAVATIONS OR DESIGNATED BORROW AREAS. FILL MATERIAL SHALL CONTAIN NO FROZEN MATERIAL, SOD, BRUSH, ROOTS, OR OTHER ORGANIC MATERIAL. EARTH EMBANKMENTS SHALL CONTAIN NO STONES OR ROCK PARTICLES OVER THREE INCHES IN DIAMETER.

THE MATERIAL USED IN THE CENTER PORTION OF THE EMBANKMENT SHALL BE THE MOST IMPERVIOUS MATERIAL OBTAINED FROM THE BORROW AREAS IF REQUIRED. THE MORE PERVIOUS MATERIALS SHALL BE USED IN THE OUTER PORTION OF THE EMBANKMENT AS SHOWN ON THE PLANS.

A. IMPERVIOUS FILL MATERIALS

IMPERVIOUS FILL SHALL BE A GLACIAL TILL, AND TO BE PROVIDED FROM AN OFFSITE SOURCE IN THE QUANTITIES REQUIRED FOR COMPLETION. FILL TO BE APPROVED BY THE ENGINEER. GLACIAL TILL SHALL CONSIST OF HARD AND DURABLE PARTICLES OR FRAGMENTS AND SHALL BE FREE FROM ORGANIC MATTER AND OTHER OBJECTIONABLE MATERIALS. GLACIAL TILL SHALL GENERALLY CONFORM TO THE FOLLOWING GRADATION LIMITS:

U.S. STANDARD SIEVE SIZE	PERCENTAGE PASSING BY WEIGHT
3 INCH	100
NO. 4	60-95
NO. 10	50-95
NO. 40	30-75
NO. 100	20-65
NO. 200	10-40

2. EMBANKMENT FOUNDATION PREPARATION

AREAS WHERE EMBANKMENTS ARE TO BE FORMED SHALL BE CLEARED AND GRUBBED OF ALL TOPSOIL AND OTHER ORGANIC MATERIALS TO A DEPTH OF AT LEAST 24 INCHES. UNLESS OTHERWISE SPECIFIED ON THE DRAWINGS, FOUNDATION AREAS SHALL BE SCARIFIED TO A DEPTH OF THREE INCHES PRIOR TO PLACEMENT OF FILL MATERIAL.

3. PLACEMENT

NO FILL SHALL BE PLACED UNTIL THE FOUNDATION PREPARATION AND EXCAVATIONS IN THE FOUNDATION HAVE BEEN COMPLETED. NO FILL SHALL BE PLACED ON A FROZEN SURFACE NOR SHALL FROZEN MATERIAL BE INCORPORATED.

A. EMBANKMENT

MATERIAL SHALL BE PLACED IN HORIZONTAL LAYERS. THE THICKNESS OF LAYERS SHALL BE SIX INCHES. DURING CONSTRUCTION, THE SURFACE OF THE FILL SHALL HAVE A CROWN OR CROSS-SLOPE OF NOT LESS THAN TWO PERCENT. EACH LAYER OR LIFT SHALL EXTEND OVER THE ENTIRE AREA OF THE FILL.

THE FILL SHALL BE FREE FROM LENSES, POCKETS, STREAKS, OR LAYERS OF MATERIAL DIFFERING SUBSTANTIALLY IN TEXTURE OR GRADATION FROM THE SURROUNDING MATERIAL. THE MORE PERVIOUS MATERIAL SHALL BE PLACED IN THE OUTSIDE PORTION OF THE EMBANKMENT OR AS INDICATED ON THE DRAWINGS. THE FINISHED FILL SHALL BE SHAPED AND GRADED TO THE LINES AND GRADE SHOWN ON THE DRAWINGS.

B. BACKFILL AT THE PIPE OUTLET

BACKFILL SHALL BE PLACED IN HORIZONTAL LAYERS NOT TO EXCEED THREE INCHES IN THICKNESS AND SHALL BE BROUGHT UP UNIFORMLY AROUND THE OUTLET PIPE AND FLARED END SECTION

4. MOISTURE CONTROL

THE MOISTURE CONTENT OF MATERIALS IN THE EMBANKMENT SHALL BE CONTROLLED TO MEET THE REQUIREMENTS OF SECTION 5, "COMPACTION OF EMBANKMENT." WHEN NECESSARY, MOISTURE SHALL BE ADDED BY USE OF APPROVED SPRINKLING EQUIPMENT. WATER SHALL BE ADDED UNIFORMLY AND EACH LAYER SHALL BE THOROUGHLY DISKED OR HARROWED TO PROVIDE ROPER MIXING. ANY LAYER FOUND TOO WET FOR PROPER COMPACTION SHALL BE ALLOWED TO DRY BEFORE ROLLING. PLACING OR ROLLING OF MATERIAL ON EARTH FILLS WILL NOT BE PERMITTED DURING OR IMMEDIATELY AFTER RAINFALLS WHICH INCREASE THE MOISTURE CONTENT BEYOND THE LIMIT OF SATISFACTORY COMPACTION. THE EARTH FILL SHALL BE BROUGHT UP UNIFORMLY AND ITS TOP SHALL BE KEPT GRADED AND SLOPED SO THAT A MINIMUM OF RAINWATER WILL BE RETAINED THEREON. COMPACTED EARTH FILL DAMAGED BY WASHING SHALL BE ACCEPTABLY REPLACED BY THE CONTRACTOR.

5. COMPACTION

A. EMBANKMENT

EMBANKMENT MATERIAL SHALL BE COMPACTED TO 95% OF THE STANDARD PROCTOR DENSITY AT NEAR OPTIMUM MOISTURE CONTENT AND BY THE COMPACTION EQUIPMENT SPECIFIED HEREIN. THE COMPACTION EQUIPMENT SHALL TRAVERSE THE ENTIRE SURFACE OF EACH LAYER OF FILL MATERIAL.

APPROVED TAMPING ROLLERS SHALL BE USED FOR COMPACTING ALL PARTS OF THE EMBANKMENTS WHICH THEY CAN EFFECTIVELY REACH. THE CONTRACTOR SHALL DEMONSTRATE THE EFFECTIVENESS OF THE ROLLER BY ACTUAL SOIL COMPACTION RESULTS OF THE SOIL TO BE USED IN THE EMBANKMENT WITH LABORATORY WORK PERFORMED BY AN APPROVED SOIL TESTING LABORATORY.

B. BACKFILL AT OUTLET CONDUIT

BACKFILL SHALL BE COMPACTED BY HAND TAMPING WITH MECHANICAL TAMPERS. HEAVY EQUIPMENT SHALL NOT BE OPERATED WITHIN TWO FEET OF ANY STRUCTURE. EQUIPMENT SHALL NOT BE ALLOWED TO OPERATE OVER THE OUTLET CONDUITS UNTIL THERE IS 24 INCHES OF FILL OVER THE PIPE CONDUITS.

6. FINISHING EMBANKMENTS

THE EMBANKMENTS SHALL BE CONSTRUCTED TO THE ELEVATIONS, LINES, GRADES AND CROSS-SECTIONS AS SHOWN ON THE DRAWINGS. THE EMBANKMENTS SHALL BE MAINTAINED IN A MANNER SATISFACTORY TO THE ENGINEER AND SURFACES SHALL BE COMPACT AND ACCURATELY GRADED BEFORE TOPSOIL IS PLACED ON THEM. THE CONTRACTOR SHALL CHECK THE EMBANKMENT SLOPES WITH STRING LINES TO INSURE THAT THEY CONFORM TO THE SLOPES GIVEN ON THE PLANS AND ARE UNIFORM FOR THE ENTIRE LENGTH OF THE SLOPE.

7. CONTROL OF WATER

THE PROJECT SITE IS SUBJECT TO HIGH WATER TABLE. THE CONTRACTOR SHALL USE TEMPORARY PIPES OR PUMPS TO ASSURE PLACEMENT OF SELECT FILL IN DRY CONDITIONS.

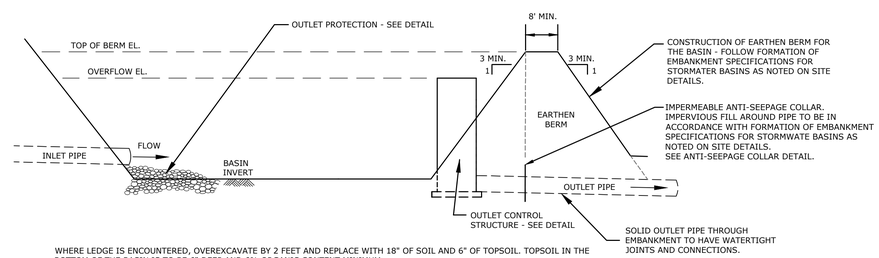

WHERE LEDGE IS ENCOUNTERED, OVEREXCAVATE BY 2 FEET AND REPLACE WITH 18" OF SOIL AND 6" OF TOPSOIL. TOPSOIL IN THE BOTTOM OF THE BASIN IS TO BE 6" DEEP AND 6% ORGANIC CONTENT MINIMUM.

TYPICAL DETENTION BASIN

NOT TO SCALE

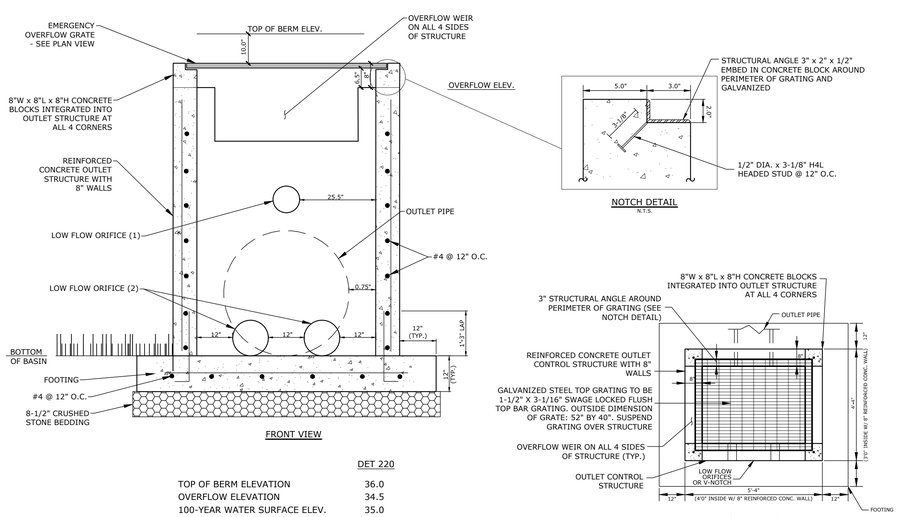

	DET 220
TOP OF BERM ELEVATION	36.0
OVERFLOW ELEVATION	34.5
100-YEAR WATER SURFACE ELEV.	35.0
LOW FLOW ORIFICE DIAMETER (1)	9"
LOW FLOW ORIFICE INVERT (1)	30.0
LOW FLOW ORIFICE DIAMETER (2)	12" (2 ORIF.)
LOW FLOW ORIFICE INVERT (2)	26.0
OUTLET PIPE DIAMETER	42"
OUTLET PIPE INVERT	26.0
BASIN BOTTOM ELEVATION	26.0

DETENTION BASIN OUTLET CONTROL STRUCTURES

SCALE: 1"=2'

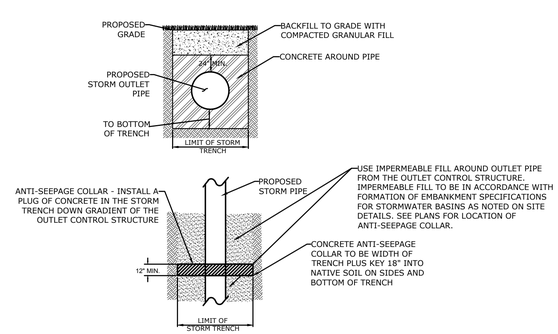

ANTI SEEPAGE COLLAR

NOT TO SCALE

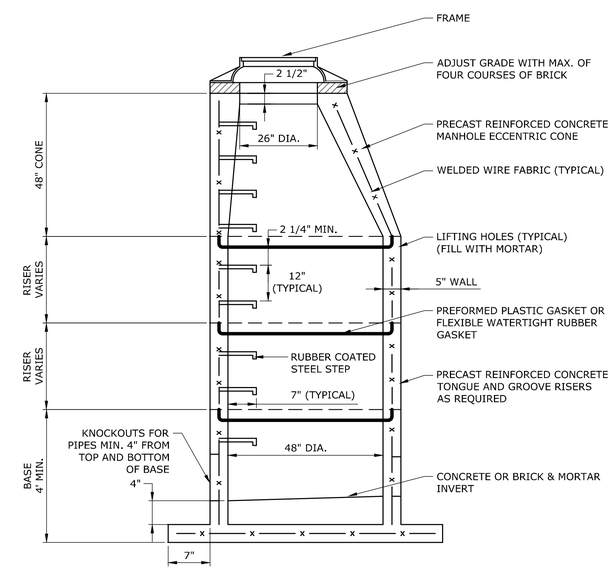

STORM MANHOLE

NOT TO SCALE

SLR
99 REALTY DRIVE
CHESHIRE, CT 06410
203.271.1773
SLRCONSULTING.COM

DESCRIPTION	DATE	BY

SITE DETAILS

TUNXIS HILL PARK
FLOODING MITIGATION ASSESSMENT

225 MELVILLE AVENUE
FAIRFIELD, CONNECTICUT

---	---	---
DESIGNED	DRAWN	CHECKED

SCALE: NOT TO SCALE

DATE: FEBRUARY 01, 2022

PROJECT NO.: 1342-28

SHEET NO.: 7 OF 8

SHEET NAME: SD-1