STANDARD PLANS

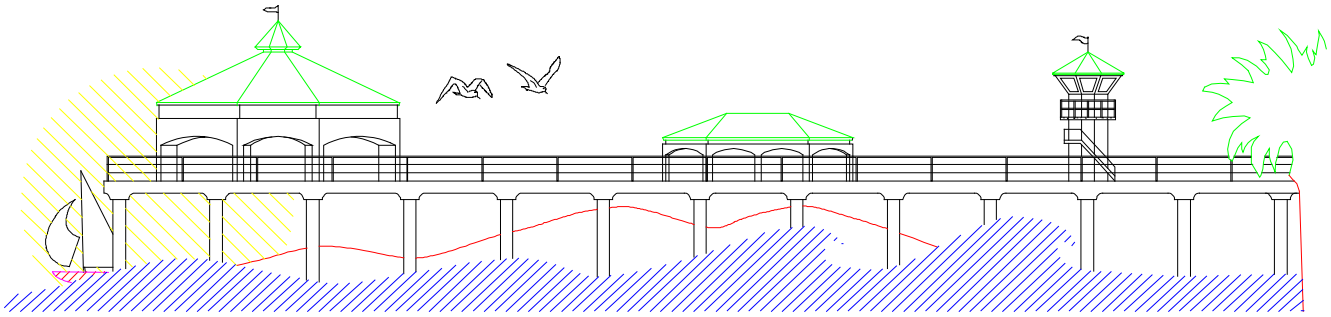

CITY OF HUNTINGTON BEACH

DEPARTMENT OF PUBLIC WORKS

Series 100 and 200 –General Notes and Street Improvement Standards

#	Page	Description	Revision Date
100	1 of 4	General Notes	5/1/2008
100	2 of 4	General Notes	5/1/2008
100	3 of 4	General Notes	5/1/2008
100	4 of 4	General Notes	5/1/2008
101		Major Arterial Highway Typical Section	5/1/2008
102		Primary Arterial Highway Typical Section	5/1/2008
103		Secondary Arterial Highway Typical Section	5/1/2008
104		Local Streets Typical Section	5/1/2008
105		Knuckle Details	3/21/1994
106		Cul-de-sac	3/21/1994
107	1 of 3	Alley Approach	5/1/2008
107	2 of 3	Alley Section	5/1/2008
107	3 of 3	Alley Section	5/1/2008
108		Landscape Med. Moisture Barrier Detail	5/1/2008
109		Trench / Pavement Repair Detail	5/1/2008
110		Steel Plate Bridging	5/1/2008
111		Material Storage in R/W	5/1/2008
201		Curb Section	5/1/2008
202		Curb & Gutter Section	5/1/2008
203	1 of 2	Corner Bus Turnout	5/1/2008
203	2 of 2	Mid-Block Bus Turnout	5/1/2008
204		Residential Lot Drain	5/1/2008
205		Concrete Cross Gutter	5/1/2008
206		16' Concrete Cross Gutter	5/1/2008
207		Sidewalk and Parkway	5/1/2008
209		Residential Driveway Approach	5/1/2008
211	1 of 2	Commercial and Industrial Drive Approach	5/1/2008
211	2 of 2	Commercial and Industrial Drive Approach	5/1/2008
215	1 of 3	Utility conduit locations in r/w	5/1/2008
215	2 of 3	Utility conduit locations in r/w	5/1/2008
215	3 of 3	Utility conduit locations in r/w	5/1/2008
216		Private Street Rolled Curb	5/1/2008
217		Parkway Repair for Utility Box Installation	5/1/2008
218		3' Longitudinal Gutter	5/1/2008
219		Survey Monument	3/21/1994
220		Micro-Trenching	3/1/2022

Series 400 and 500 - Traffic and Sewer Standards

#	Page	Description	Revision Date
300	1 of 2	Storm Drain Design Criteria	5/1/2008
300	2 of 2	Storm Drain Design Criteria	5/1/2008
301	1 of 2	Curb Inlet Catch Basin and Local Depression	5/1/2008
301	2 of 2	Curb Inlet Catch Basin and Local Depression	5/1/2008
302		Apron Depression Catch Basin	5/1/2008
303		Catch Basin Frame & Cover	5/1/2008
304	1 of 2	Junction Structure Type "A"	5/1/2008
304	2 of 2	Junction Structure Type "A"	5/1/2008
305	1 of 2	Junction Structure Type "B"	5/1/2008
305	2 of 2	Junction Structure Type "B"	5/1/2008
306		48" Reinforced Concrete Manhole	5/1/2008
307		Standard Storm Drain Manhole Cover & Frame	5/1/2008
308		Reinforced Concrete Pipe Bedding Detail	3/21/1994
309	1 of 2	Catch Basin Reinforcement	3/21/1994
309	2 of 2	Catch Basin Reinforcement	5/1/2008
310		Concrete Collar	3/21/1994
311		Junction Structure Type "C"	3/21/1994
312	1 of 4	Parkway Culvert Type "A"	5/1/2008
312	2 of 4	Parkway Culvert Type "B"	5/1/2008
312	3 of 4	Parkway Culvert Type "C"	5/1/2008
312	4 of 4	Parkway Culver Details & Notes	5/1/2008
313	1 of 2	Junction Structure Type "D"	5/1/2008
313	2 of 2	Junction Structure Type "D"	5/1/2008
314	1 of 2	Junction Structure Type "E"	5/1/2008
314	2 of 2	Junction Structure Type "E"	3/21/1994
315	1 of 2	H.D.P.E. Pipe Bedding Details	5/1/2008
315	2 of 2	H.D.P.E. Pipe Bedding Details	5/1/2008
401	1 of 5	Street Sign Assembly	4/14/2016
401	2 of 5	Street Sign Assembly	4/14/2016
401	3 of 5	Street Sign Assembly	4/14/2016
401	4 of 5	Street Sign Assembly	4/14/2016
401	5 of 5	Street Sign Assembly	4/14/2016
402	1 of 6	Single Meter Underground Service Pedestal	3/15/1994
402	2 of 6	Single Meter Underground Service Pedestal Elec. Circuitry	3/15/1994

402	3 of 6	Single Meter Underground Service Pedestal Elec. Circuitry	3/15/1994
402	4 of 6	Dual Meter Underground Service Pedestal	3/15/1994
402	5 of 6	Dual Meter Underground Service Pedestal Elec. Circuitry	3/15/1994
402	6 of 6	Dual Meter Underground Service Pedestal Elec. Circuitry	3/15/1994

Series 400 and 500 - Traffic and Sewer Standards

#	Page	Description	Revision Date
402	4 of 6	Dual Meter Underground Service Pedestal	3/15/1994
402	5 of 6	Dual Meter Underground Service Pedestal Elec. Circuitry	3/15/1994
402	6 of 6	Dual Meter Underground Service Pedestal Elec. Circuitry	3/15/1994
403		Temporary Sign Trestle Detail	3/15/1994
404	1 of 3	Non-Illuminated Street Name Sign	3/15/1994
404	2 of 3	Non-Illuminated Street Name Sign	3/15/1994
404	3 of 3	Non-Illuminated Street Name Sign	3/15/1994
405		Parking Restrictions on Private Property	3/15/1994
406		Typical Crosswalk Installation	6/23/2008
407		Typical Turn Lane Marking Details	6/23/2008
408		Typical "Stop" Legend and Limit Line Placement	6/23/2008
409		Bike Lane Legend	4/14/2016
410		Type Q and R7 Installation	11/4/2015
411	1 of 2	Modifications to City-Owned Street Lighting Systems	6/23/2008
411	2 of 2	Modifications to City-Owned Street Lighting Systems	6/23/2008
412	1 of 2	Telephone Booth Installations in the Public Right-of-Way	3/15/1994
412	2 of 2	Bus Shelter Installations (Electrical)	3/15/1994
413		End of Road Barricade	3/15/1994
414		Wood Retaining Wall Barricade	3/15/1994
417		Parallel Parking Stalls	6/23/2008
422	1 of 2	Pull Box Stabilization For Street Lights	6/23/2008
422	2 of 2	Pull Box Stabilization For Street Lights	6/23/2008
500	1 of 7	Sewer Facility Design Criteria	5/1/2008
500	2 of 7	Sewer Facility Design Criteria	5/1/2008
500	3 of 7	Sewer Facility Design Criteria	5/1/2008
500	4 of 7	Sewer Facility Design Criteria	5/1/2008
500	5 of 7	Sewer Facility Design Criteria	5/1/2008
500	6 of 7	Sewer Facility Design Criteria	5/1/2008
500	7 of 7	Sewer Facility Design Criteria	5/1/2008
501		Basic Separation from Domestic Water and Reclaimed Water	5/1/2008
502		V.C.P. Pipe Bedding Details	5/1/2008
503		P.V.C. Pipe Bedding Details	5/1/2008

#	Page	Description	Revision Date
504		Manhole Concrete Base	5/1/2008
505		Precast reinforced Concrete Manhole	5/1/2005
507		Typical Sewer Lateral	5/1/2005
508		Standard Clean-out Section	5/1/2005
509		Sewer Chimney Pipe	5/1/2005
510		Cut in Wye Connection	5/1/2005
511		Sewer Saddle Connection	5/1/2005
512		Steel Casing Pipe	5/1/2005
513		Standard Manhole Cover and Frame	5/1/2005
514		Concrete Encasement Type 'A', 'B' and 'C'	5/1/2005
515		Gas Flap	5/1/2005
516		Tapping Sleeve for "Lined" Sewer Main	5/1/2005
517	1 of 2	Trenchless Pipeline rehabilitation Design Criteria	5/1/2005
517	2 of 2	Trenchless Pipeline rehabilitation Design Criteria	5/1/2005
600-638		Water Standard Plans- See Separate File	
701-733		Landscape Standard Plans- See Separate File	
		Series 800 - Small Cell Installations (SCI)	
800		General Notes for Small Cell Installations (SCI)	11/16/2017
801	1 of 2	SCI (Equipment Underground) - Case 1	11/16/2017
801	2 of 2	SCI (Equipment Underground) - Case 1	11/16/2017
802	1 of 2	SCI ("Stealth" Pole) - Case 2	11/16/2017
802	2 of 2	SCI ("Stealth" Pole) - Case 2	11/16/2017
803	1 of 2	SCI ("Semi-Stealth" Pole) - Case 3	11/16/2017
803	2 of 2	SCI ("Semi-Stealth" Pole) - Case 3	11/16/2017
804	1 of 2	SCI ("Sleek" Pole) - Case 4	11/16/2017
804	2 of 2	SCI ("Sleek" Pole) - Case 4	11/16/2017

SECTION

100

General Notes

1. All work shall conform to the latest edition of the "Standard Specifications for Public Works Construction" and supplements thereto (APWA/AGC, "Green Book"). unless specifically noted otherwise.
2. All work shall conform to these Standard Plans, the Landscape Standard Plans, Arboricultural & Landscape Standards and Specifications, the Water Division Standard Plans and City Ordinances.
3. The contractor shall notify the Public Works Department at (714) 536-5431 at least 48 hours prior to beginning any work.
4. Working / Inspection hours are between 7:00 A.M. and 4:00 P.M. Monday through Friday, excluding Sundays and holidays. Any other hours to be approved prior to start of work. These hours may be subject to further limitations by Traffic Control requirements.
5. All work within public right-of-way or easements require an encroachment permit be obtained from the Public Works Department prior to the start of work..
6. The contractor shall be responsible for providing all testing required by the City.
7. The contractor shall keep a signed set of approved plans and a copy of the encroachment or grading permit on the job site during working operations.
8. All work shall comply with conditions established by the California Regional Water Quality Control Board and the City.
9. The contractor shall comply with all applicable federal, state and local safety requirements.
10. The contractor shall restore or replace in kind all existing improvements disturbed during construction including, but not limited to paving, utilities, street striping, landscaping and signs.
11. All work performed shall be guaranteed for a one year period.
12. One sack slurry backfill shall be used for all trench crossings of streets and all trenches within alleys.
13. Survey monuments or accessories to the same (tie points) shall be preserved, referenced and/or replaced pursuant to Section 8771 of the Business and Professions Code, of the State of California. Existing Survey monuments and their accessories in danger of being disturbed, covered, damaged or otherwise obliterated shall have a Corner Record filed with the Orange County Surveyor and the Local Agency prior to construction. In addition a Corner Record shall be filed with the Orange County Surveyor's office and the Local Agency prior to the the certificate of completion (Public Works Inspector's sign off) if the character of the monument or accessory to the same has been affected.
14. Temporary monuments set to establish lines of control, ownership, easements subdivision or tract boundaries or set as a direct reference to the same shall not be accepted. Permanent monuments which comply with Section 8772, of the Business and professions code shall be required prioir to grading activities. A copy of the Corner Record or Record of Survey, shall be submitted to the Public Works Inspector prior to approval of grading activities.
15. All USA markings shall be removed within 24 hours of completion of the work.

APPROVED:

CITY ENGINEER

REVISION DATE: May 2008

CITY OF HUNTINGTON BEACH

DEPARTMENT OF PUBLIC WORKS

GENERAL NOTES

STANDARD PLAN 100

Traffic Control and Safety

1. *Barricading and detouring shall be in conformance with the requirements of the current State of California Department of Transportation Manual of Traffic Controls for Construction and Maintenance Work Zones, and shall be approved by the inspector prior to any work.*
2. *No street shall be closed to traffic without written permission from the City Traffic Engineer except when directed by law enforcement or fire officials.*
3. *The contractor shall make every effort to provide for smooth traffic flow and safety. Access shall be maintained for all properties adjacent to the work.*
4. *Detouring operations for a period of six consecutive calendar days, or more, require the installation of temporary street striping and removal of interfering striping by sandblasting. The detouring striping plan or construction traffic control plan must be submitted to the City Traffic Engineer for review and approval.*
5. *All traffic control devices shall be restored to their original condition at the end of the work to the satisfaction of the City Traffic Engineer.*
6. *Traffic control devices (TCD's) shall remain visible and operational at all times.*

Utilities and Underground Work

1. *The contractor shall contact all utility companies having facilities within the work area at least 48 hours prior to beginning work.*
2. *Whenever possible, all utility services shall be installed below water mains and appurtenances with a one foot minimum clearance where the lines cross. Utility conduits (excluding sewer and reclaimed water), laterals and services shall not be allowed within five feet of parallel water facilities. Separation of sewer, water, and reclaimed water lines shall conform to State of California, Department of Public Health Standards and City Water Division Standards.*
3. *All utility services stub–outs shall be installed a minimum of 2' beyond the right–of–way line prior to paving of streets.*
4. *Water facilities and appurtenances shall comply with City Water Division Standards and Specifications and shall be inspected.*
5. *All required water facilities including fire hydrants and appurtenances shall be accessible and fully operational prior to constructing any permanent structure using combustible materials.*
6. *All utility service lines shall have a location identity marking on the top of curb (i.e. "S" for sewer, "G" for gas, "W" for water).*
7. *All V.C.P. shall be laid with mechanical joints, "Wedgelock", "Speed Seal", "Band Seal" or approved equal.*
8. *All gravity sewers shall be air tested in accordance with section 306–1.4.4 of the Green Book.*
9. *The sewer contractor shall furnish the developer and the City Engineer with the location of wyes and house connections as constructed. All sewer manhole frames and covers shall be left 6" below finished grade. The sewer contractor shall raise the manhole and covers to 1/8" below the finished grade upon completion of surfacing.*
10. *Backfill of all trenches shall be compacted to a minimum relative compaction of 90% in the upper three feet, measured from the pavement surface, or from finish grade where there is no pavement. Compaction shall be verified by a soils report prepared by a registered engineer.*

Utilities and Underground Work (Cont)

11. *Trench resurfacing and sidewalk replacement shall be completed as soon as possible, but no later than five working days after subgrade compaction has been completed.*
12. *All utilities shall be bored under arterial highways unless otherwise approved by the City Engineer.*
13. *No street shall be open-cut if paved or sealed within the previous three years, except as allowed in HBMC Chapter 12.13. Such open cuts shall be slurry sealed, Type 1, to the limits required by the City Engineer.*
14. *All sewer mains and storm drains shall be Closed Circuit Television Inspected (C.C.T.V.I.) within one hour after clear water flushing, said facility and a video recording shall be submitted to the Public Works Inspector.*
15. *All existing street lighting appurtenances shall be protected in place unless construction plans note otherwise. Disrupted or damaged street lighting systems shall be repaired or replaced to the current Public Works Department Standards as directed by the Transportation Manager. Damaged City owned street light conduit or cable shall be replaced from pole to pole. Southern California Edison Company owned street light cable and conduit shall be repaired or replaced to the satisfaction of S.C.E.*
16. *All streets that are slurry sealed, fog sealed, or chip sealed shall have all existing striping and raised pavement markers sand blasted prior to sealing. Striping and raised pavement markers shall be replaced to the satisfaction of the Transportation Manager.*
17. *All trenches shall be sawcut unless otherwise directed by the City Engineer.*

Special Requirements for Development Projects

1. *All tests as required by the City shall be at the contractor's expense.*
2. *Cable television conduit shall be installed per Std. Plan 215.*
3. *Curb and gutter shall be constructed prior to installation of water system, unless the water system is staked by the engineer. Such staking shall provide for alignment, cuts, location of all services and meters, gate valves, fire hydrants, and any other staking required by the City Engineer. Any damage to water systems by subsequent construction shall be repaired by complete replacement of damaged section.*
4. *Curb and gutter grades shall be designed to exceed or meet the City minimum requirements of 0.50%. Grades less than 0.50% require prior written permission from the City Engineer.*
5. *The structural street sections on the plans are for estimating purposes based on an "R" value of 5. Alternate sections require approved engineering calculations based on a soils report prepared by a licensed soils engineer. No sections less than the City's minimum will be allowed.*
6. *After the A.C. surfacing has been completed at least one week, an asphaltic emulsion seal coat shall be applied at the approximate rate of 0.45 gallons per square yard.*
7. *For subdivision work within the City, the final or surface layer of asphalt concrete shall not be placed until all on-site improvements have been completed, including all grading, and until all unacceptable concrete is removed and replaced at the direction of the City Engineer.*
8. *Asphalt concrete shall meet the requirements of Section 400 of the "Green Book".*

Special Requirements for Development Projects (Cont)

9. *For asphalt concrete the exact proportions of aggregate and the amount of asphalt binder for each type of mixture shall be regulated as directed by the City Engineer. However, as a general guideline, the required asphalt content for the City of Huntington Beach asphalt concrete mix designs will be as follows:*

Arterial Highways	
3/4" (III–B–2) Base Course	*5.4%*
1/2" (III–C–3) Surface Course	*5.8%*
Non–Arterial Highways	
3/4" (III–B–3) Base Course	*5.7%*
1/2" (III–C–3) Surface Course	*6.0%*

10. *As–Built plans shall be submitted.*

APPROVED:

CITY ENGINEER

REVISION DATE: May 2008

CITY OF HUNTINGTON BEACH

DEPARTMENT OF PUBLIC WORKS

GENERAL NOTES

STANDARD PLAN 100

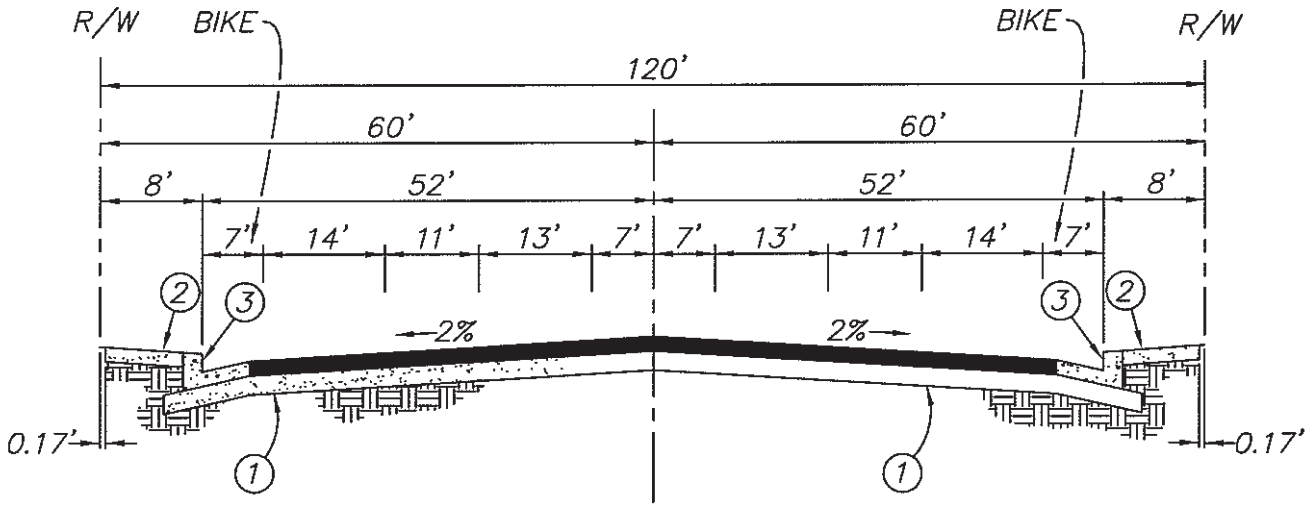

NOTES:

1. STRUCTURAL SECTION TO BE DETERMINED BY R-VALUE TEST AND 20 YEAR TRAFFIC INDEX TO BE OBTAINED FROM CITY ENGINEER. MINIMUM OF 0.40' A.C. WITH SS-1 SEALCOAT OVER 0.83' A.B.
2. PARKWAY AND SIDEWALK PER STD. PLAN 207.
3. CURB AND GUTTER PER STD. PLAN 202.

GENERAL NOTES:

1. MINIMUM LONGITUDINAL GRADE SHALL BE 0.50% UNLESS OTHERWISE APPROVED.
2. A 14' RAISED LANDSCAPED MEDIAN MAY BE REQUIRED BY THE CITY ENGINEER.
3. STREET PARKING NOT PROVIDED, UNLESS OTHERWISE APPROVED BY THE CITY ENGINEER.

APPROVED:

CITY ENGINEER

REVISION DATE: May 2008

CITY OF HUNTINGTON BEACH

DEPARTMENT OF PUBLIC WORKS

MAJOR ARTERIAL HIGHWAY TYPICAL SECTION

STANDARD PLAN 101

1 of 1

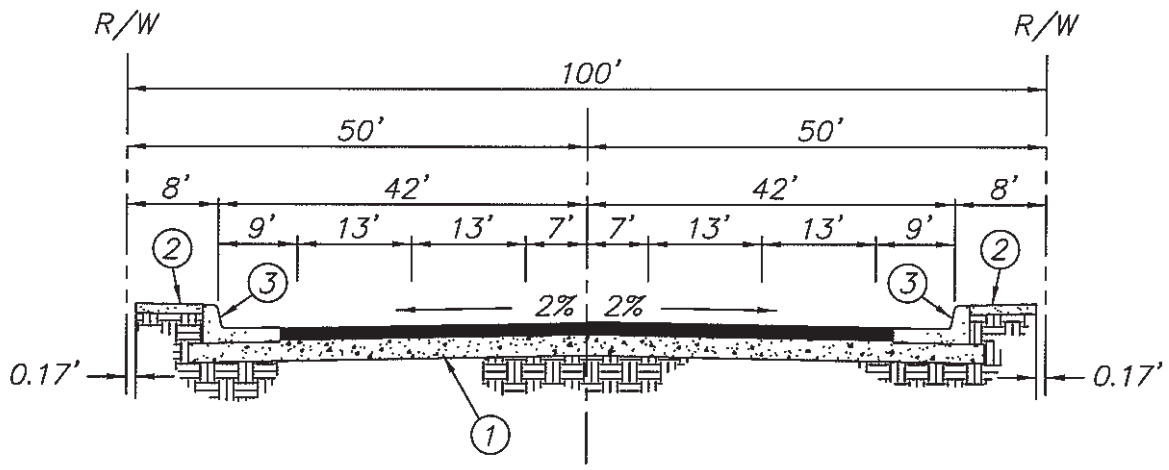

NOTES:

1. STRUCTURAL SECTION TO BE DETERMINED BY R-VALUE TEST AND 20 YEAR TRAFFIC INDEX TO BE OBTAINED FROM THE CITY ENGINEER. MINIMUM SECTION 0.40' A.C. WITH SS-1 SEAL COAT OVER OVER 0.83' A.B. T.I.
2. PARKWAY AND SIDEWALK PER STD. PLAN 207.
3. CURB AND GUTTER PER STD. PLAN 202.

GENERAL NOTES:

1. MINIMUM LONGITUDINAL GRADE SHALL BE 0.50% UNLESS OTHERWISE APPROVED.
2. A 14' RAISED LANDSCAPED MEDIAN MAY BE REQUIRED BY THE CITY ENGINEER.
3. STREET PARKING PROVIDED.
4. BIKE LANE NOT PROVIDED (ADDITIONAL 7' OF R/W EACH SIDE IF REQUIRED). TO BE DETERMINED BY CITY ENGINEER.

APPROVED:

CITY ENGINEER

REVISION DATE: May 2008

CITY OF HUNTINGTON BEACH

DEPARTMENT OF PUBLIC WORKS

PRIMARY ARTERIAL HIGHWAY TYPICAL SECTION

STANDARD PLAN 102

1 of 1

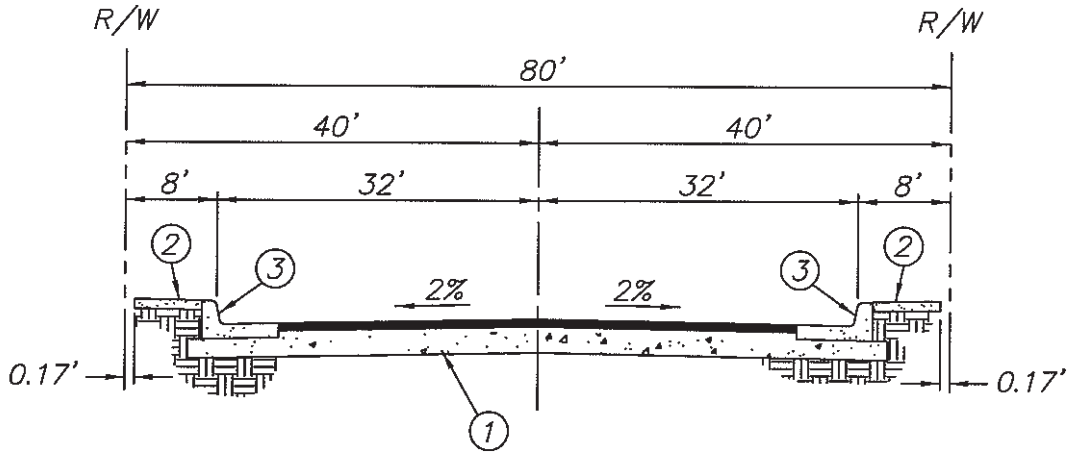

NOTES:

1. STRUCTURAL SECTION TO BE DETERMINED BY R-VALUE TEST AND 20 YEAR TRAFFIC INDEX TO BE OBTAINED FROM THE CITY ENGINEER. MINIMUM SECTION 0.40' A.C. WITH SS-1 SEAL COAT OVER 0.83' A.B. T.I.
2. PARKWAY AND SIDEWALK PER STD. PLAN 207.
3. CURB AND GUTTER PER STD. PLAN 202.

GENERAL NOTES:

1. MINIMUM LONGITUDINAL GRADE SHALL BE 0.50% UNLESS OTHERWISE APPROVED.
2. A 14' RAISED LANDSCAPED MEDIAN MAY BE REQUIRED BY THE CITY ENGINEER.

APPROVED:

CITY ENGINEER

REVISION DATE: May 2008

CITY OF HUNTINGTON BEACH

DEPARTMENT OF PUBLIC WORKS

SECONDARY ARTERIAL HIGHWAY TYPICAL SECTION

STANDARD PLAN 103

1 of 1

STANDARD STREET SPECIFICATION				
RIGHT-OF-WAY ('R/W')	STREET WIDTH ('P')	STREET TYPE	PARKWAY WIDTH('PK')	PARKING REQUIREMENTS
54'	40'	COLLECTOR	7'	BOTH SIDES
52'	40'	RESIDENTIAL	6'	BOTH SIDES
44'	32'	RESIDENTIAL	6'	ONE SIDE **
60'	44'	INDUST/COMM.	8' *	BOTH SIDES

* MAY VARY WITH CITY ENGINEER APPROVAL
** PRIOR APPROVAL REQUIRED FROM CITY ENGINEER

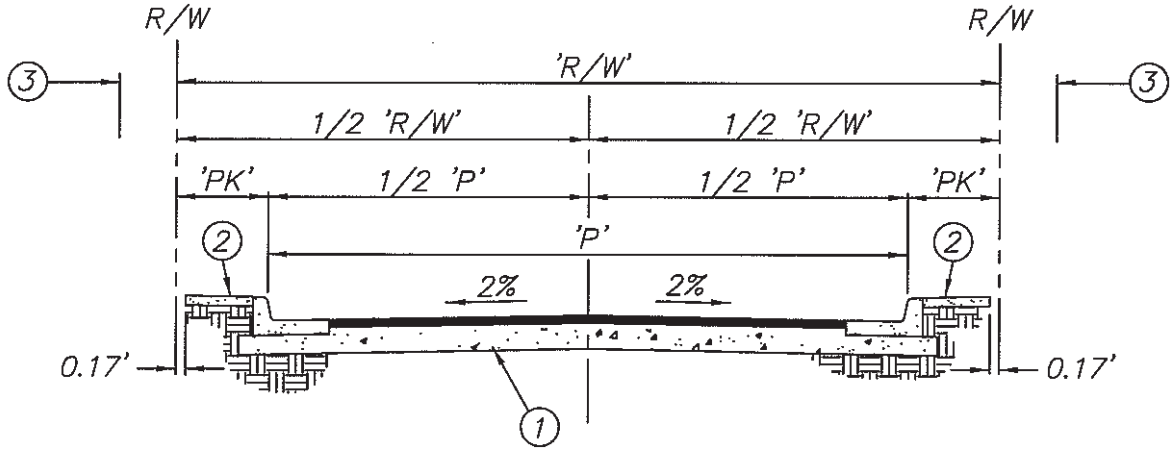

NOTES:

1. STRUCTURAL SECTION TO BE DETERMINED BY R-VALUE TEST AND 20 YEAR TRAFFIC INDEX TO BE OBTAINED FROM CITY ENGINEER. RESIDENTIAL MINIMUM SECTION SHALL BE 0.33' A.C. WITH SS-1 SEAL COAT OVER 0.5' A.B.; INDUSTRIAL/COMMERCIAL MINIMUM SECTION SHALL BE 0.40' A.C. WITH SS-1 SEAL COAT OVER 0.83' A.B. T.I.
2. PARKWAY AND SIDEWALK PER STD. PLAN 207.
3. 2' PUBLIC UTILITY EASEMENT (PUE) FOR PARKWAY 7' AND LESS.

GENERAL NOTES:

1. MINIMUM LONGITUDINAL GRADE SHALL BE 0.50% UNLESS OTHERWISE APPROVED.

APPROVED:

CITY ENGINEER

REVISION DATE: May 2008

CITY OF HUNTINGTON BEACH

DEPARTMENT OF PUBLIC WORKS

LOCAL STREETS
TYPICAL SECTION

STANDARD PLAN
104
1 of 1

CURB RADII

1 = 35.00'

2 = 60.00'

3 & 4 = 50.00'

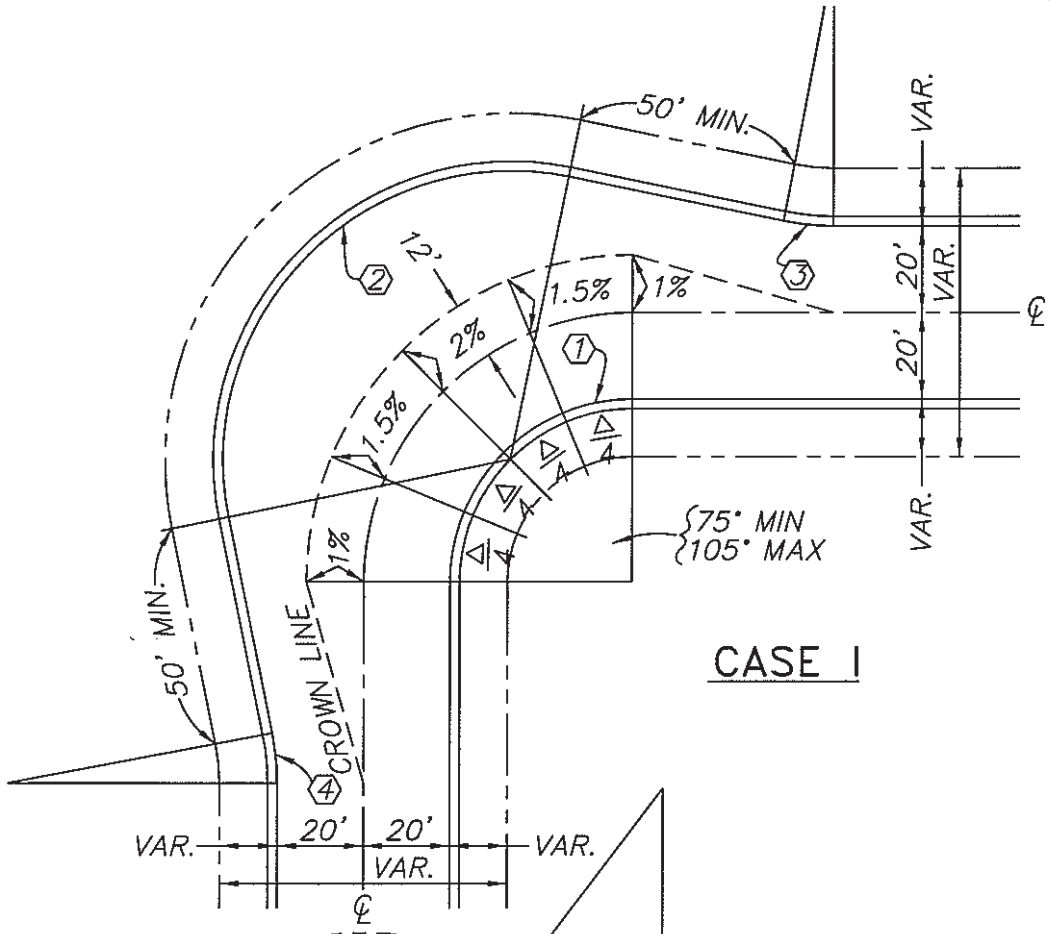

CURB RADII

1 = 30.00'

2 = 40.00'

3 & 4 = 60.00'

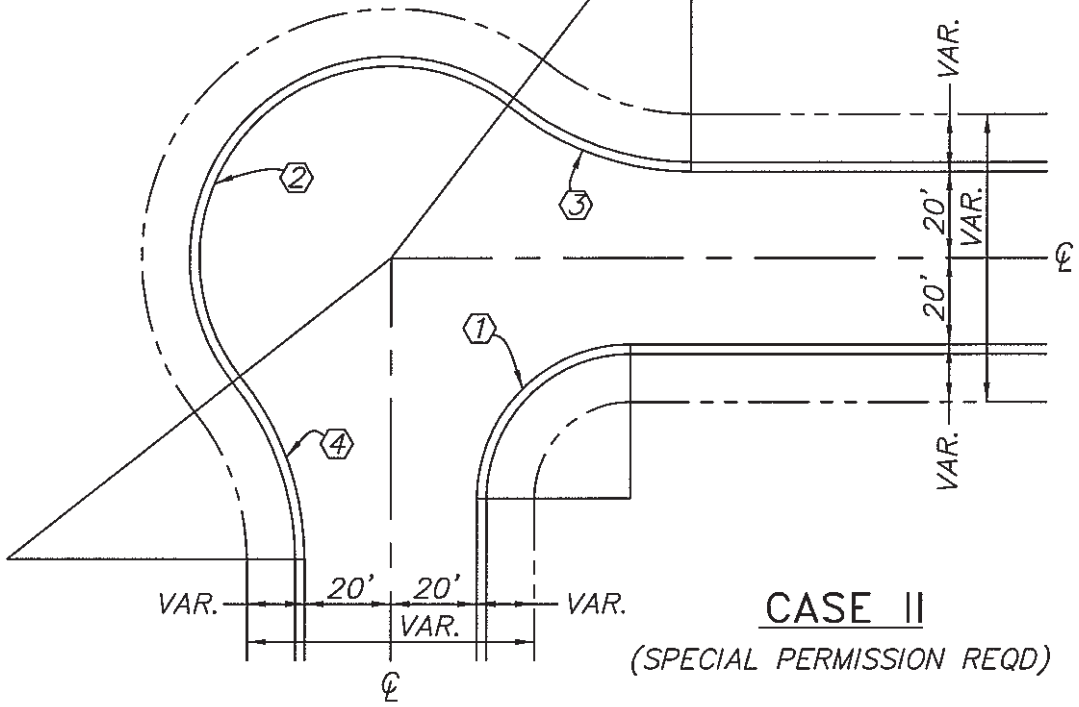

APPROVED:

CITY ENGINEER

REVISION DATE: March 21, 1994

CITY OF HUNTINGTON BEACH

DEPARTMENT OF PUBLIC WORKS

KNUCKLE DETAILS

STANDARD PLAN

105

1 of 1

					CURVE 1							CURVE 2				
'R/W'	1/2 'R/W'	1/2 'P'	'PK'	'D'	'Δ1'	CURB			R/W			'Δ2'	CURB		R/W	
						'R'	'L'	'T'	'R'	'L'	'T'		'R'	'L'	'R'	'L'
60'	30'	22'	8'	57.24'	34° 55' 04"	60'	36.57'	18.87'	52'	31.69'	16.35'	249° 50' 08"	40'	174.42'	48'	209.30'
54'	27'	20'	7'	60'	36° 52' 12"	60'	38.61'	20.00'	53'	34.11'	17.67'	253° 44' 24"	40'	177.14'	47'	208.14'
52'	26'	20'	6'	60'	36° 52' 12"	60'	38.61'	20.00'	54'	34.75'	18.00'	253° 44' 24"	40'	177.14'	46'	203.72'
44'	22'	16'	6'	64.99'	40° 32' 03"	60'	42.45'	22.16'	54'	38.20'	19.94'	261° 04' 06"	40'	182.26'	46'	209.60'

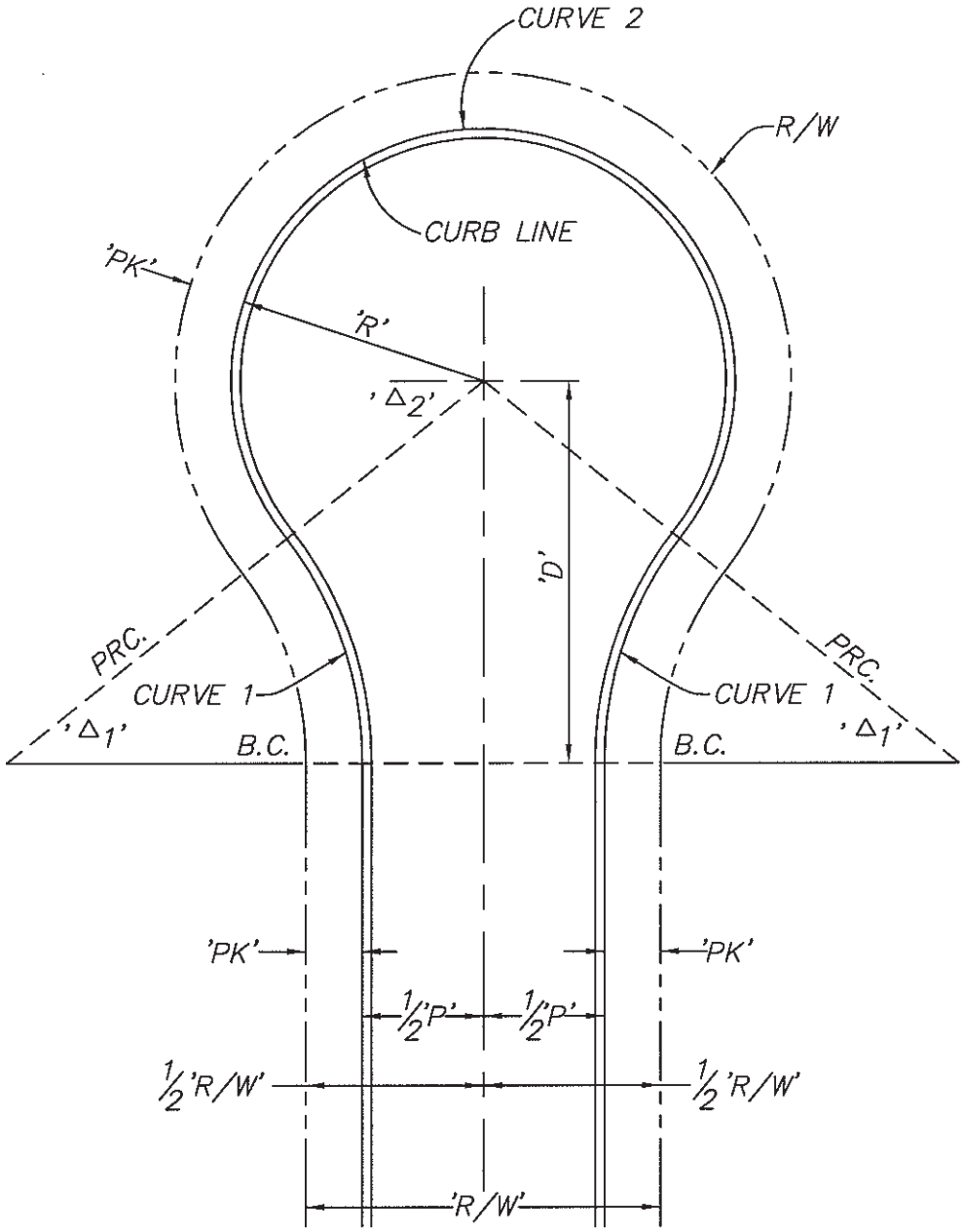

APPROVED:

CITY ENGINEER

REVISION DATE: March 21, 1994

CITY OF HUNTINGTON BEACH

DEPARTMENT OF PUBLIC WORKS

CUL-DE-SAC

STANDARD PLAN 106

1 of 1

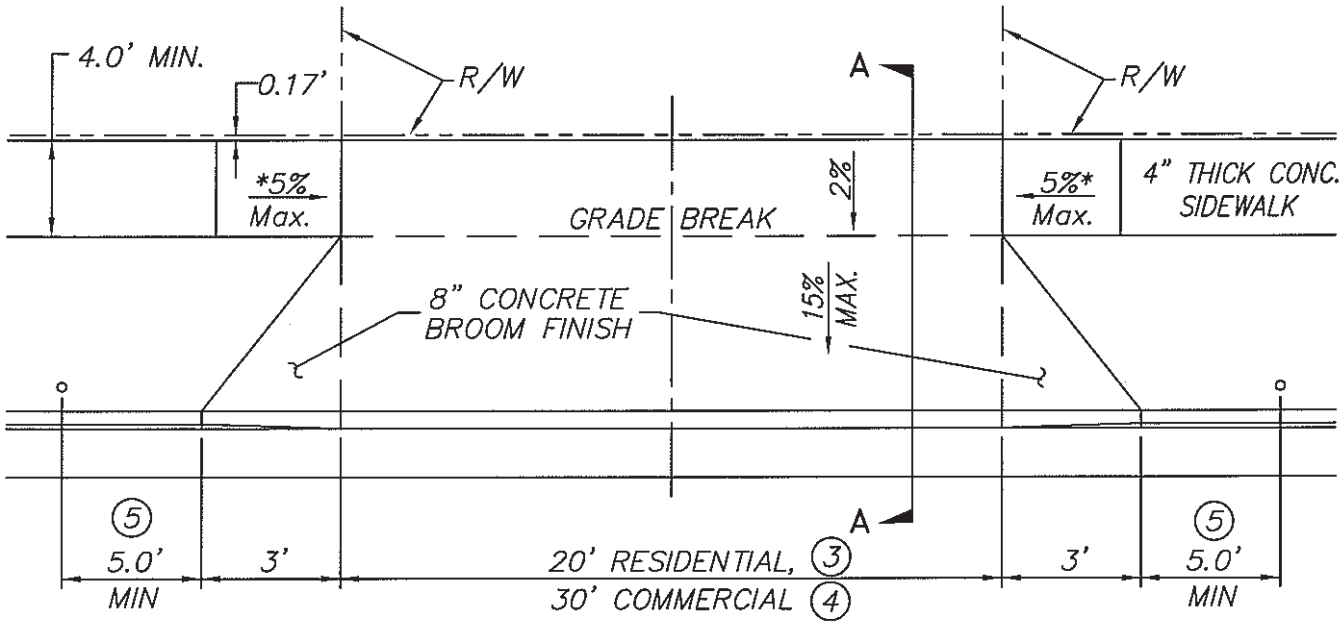

PLAN

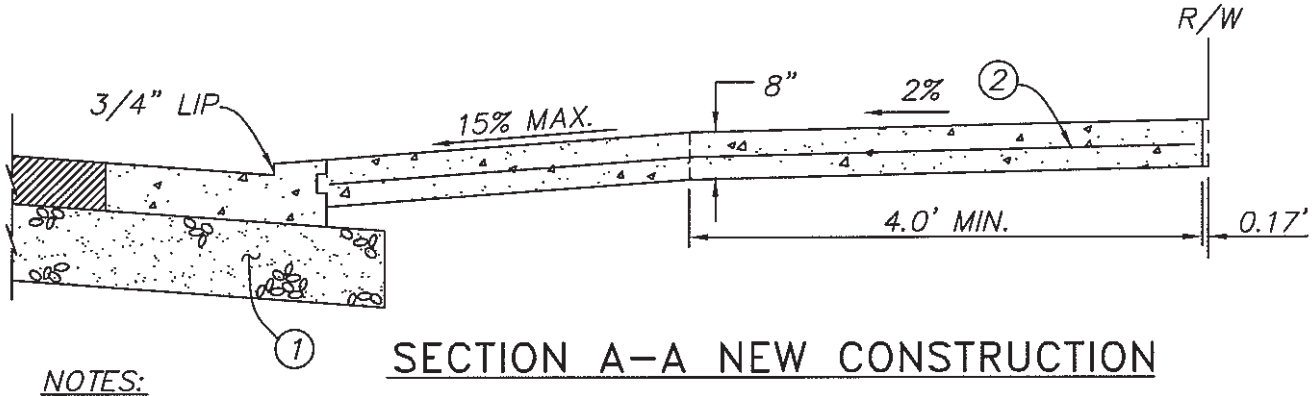

SECTION A–A NEW CONSTRUCTION

NOTES:

1. A.B. PER STD. PLAN 202.
2. FIBER MESH OR 6"x 6" No. 6 W.W.F.
3. SEE STD PLAN 209, FOR RESIDENTIAL DRIVE APPROACH.
4. SEE STD PLAN 211 FOR COMMERCIAL DRIVEWAY.
5. 5' MINIMUM CLEARANCE FROM TOP OF 'X' TO ANY ABOVE–GROUND OBSTACLE (I.E., SIGN, POLE, TREE, ETC.) FOR ANY WATER APPURTENANCE SEE WATER STANDARD PLANS.

GENERAL NOTE:

* SLOPES EXCEEDING 5% SHALL REQUIRE AN ACCESS RAMP.

APPROVED:

CITY ENGINEER

REVISION DATE: May 2008

CITY OF HUNTINGTON BEACH

DEPARTMENT OF PUBLIC WORKS

ALLEY APPROACH

STANDARD PLAN
107
1 of 3

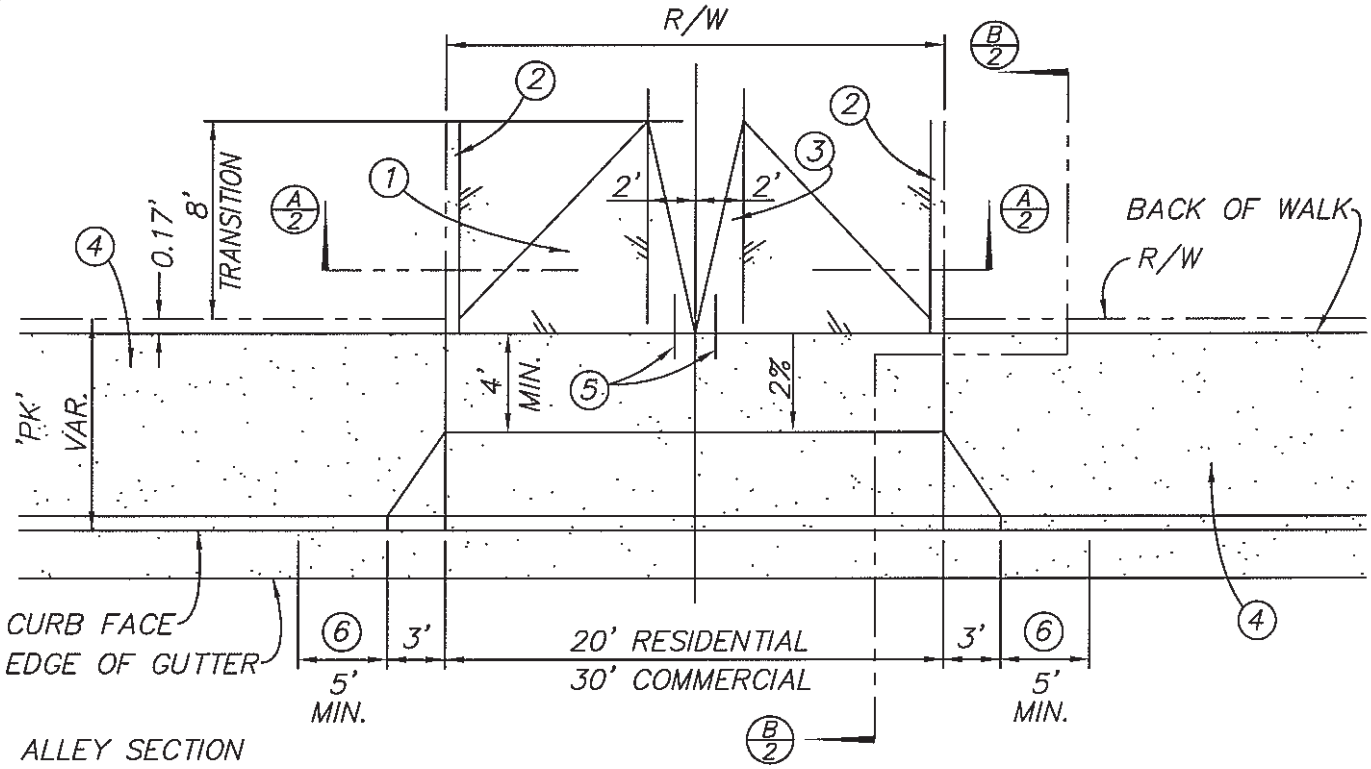

ALLEY SECTION

PLAN

R/W*	ALLEY LOCATION
20'	RESIDENTIAL
24'	DOWNTOWN COMMERCIAL
30'	COMMERCIAL

*AS DETERMINED BY THE CITY ENGINEER

NOTES:

1. THICKNESS OF IMPROVEMENT TO BE DETERMINED BY SOIL TEST. MINIMUM SECTION 0.33' A.C. OVER 0.5' A.B.
2. 2" X 8" REDWOOD HEADER WITH 2" X 3" X 18" D.F. STAKES, 36" O.C. SHALL BE USED FOR PAVEMENT EDGE EACH SIDE OF ALLEY.
3. WEAKENED PLANE OR QUICK JOINT, 20' O.C. MIN. IN ALLEY GUTTER SECTION.
4. CONSTRUCT 4" MIN. FULL WIDTH SIDEWALK WHEN PARKWAY IS LESS THAN 10' WIDE. SEE STANDARD PLAN 207 FOR PARKWAY AND SIDEWALK DETAILS.
5. 2 – 1/2" DIA. SMOOTH BARS, 2' LONG, 12" FROM EDGES AND 3" FROM BOTTOM OF ALLEY GUTTER.
6. 5' MINIMUM CLEARANCE FROM TOP OF 'X' TO ANY ABOVE–GROUND OBSTACLE (I.E., SIGN, POLE, TREE, ETC.). FOR ANY WATER APPURTENANCE SEE WATER STANDARD PLANS.

GENERAL NOTES:

1. ALLEYS SHALL NOT RECEIVE STREET DRAINAGE.
2. BACK OF ALLEY APPROACH CAN BE DEPRESSED A MAXIMUM OF 4" UPON APPROVAL BY THE CITY ENGINEER.
3. FOR ALLEY APPROACH DETAILS SEE STD. PLAN 210.

APPROVED:

CITY ENGINEER

REVISION DATE: May 2008

CITY OF HUNTINGTON BEACH

DEPARTMENT OF PUBLIC WORKS

ALLEY SECTION

STANDARD PLAN 107

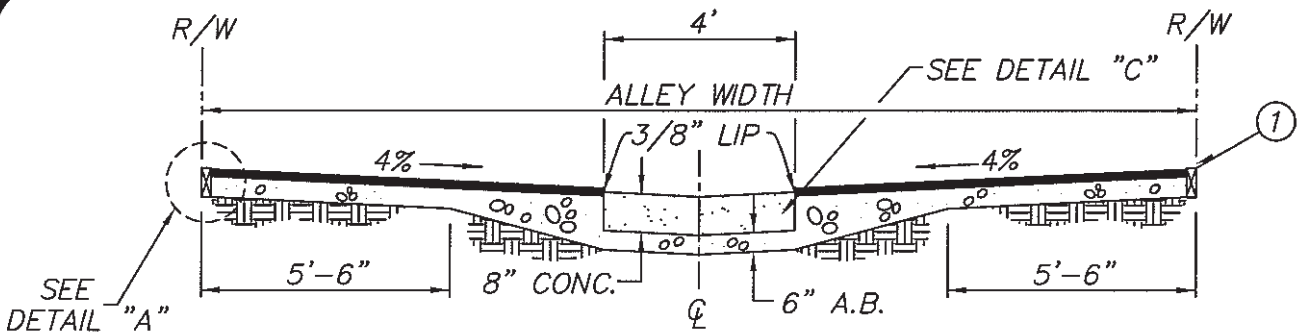

SECTION A-A

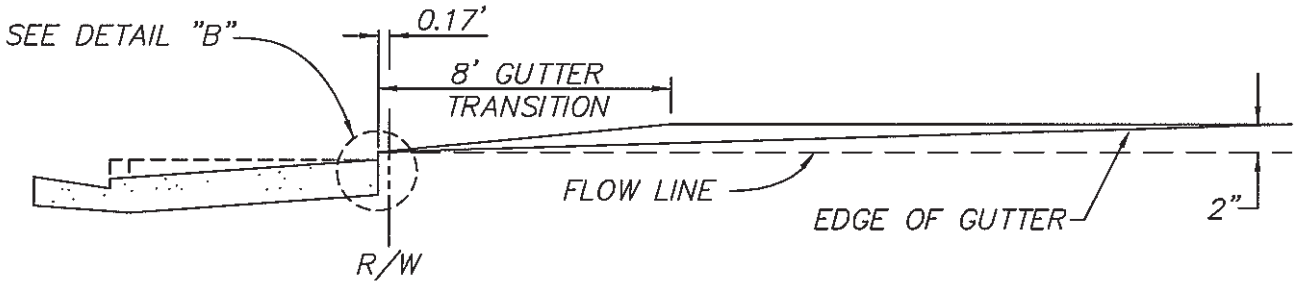

SECTION B-B

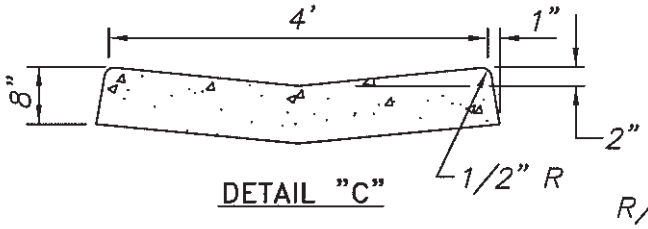

DETAIL "C"

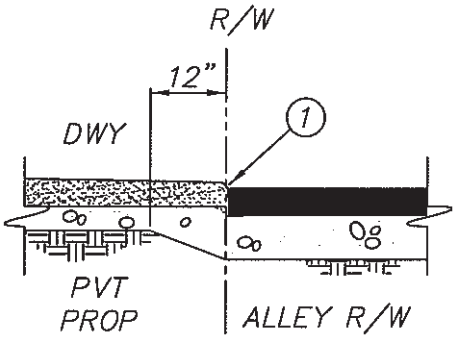

DETAIL "A"

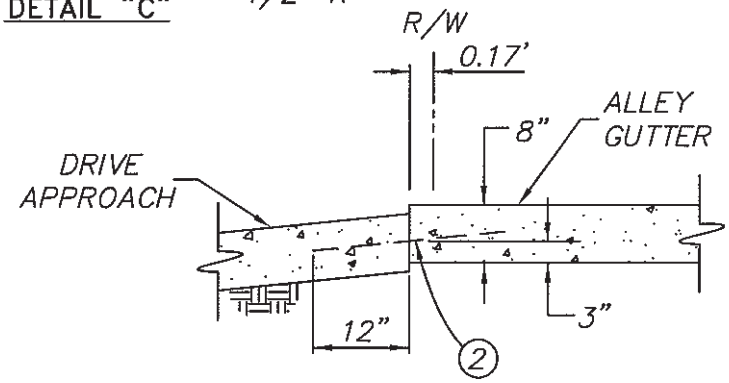

DETAIL "B"

NOTES:

1. AT DRIVEWAYS ENTERING ALLEYS, ELIMINATE HEADER AND CONSTRUCT PER DETAIL "A" ABOVE.
2. 2 – 1/2" DIA, SMOOTH BARS, 2' LONG, 12" FROM EDGES, AND 3" FROM BOTTOM OF ALLEY GUTTER, SEE DETAIL "B".

APPROVED:

CITY ENGINEER

REVISION DATE: May 2008

CITY OF HUNTINGTON BEACH

DEPARTMENT OF PUBLIC WORKS

ALLEY SECTION

STANDARD PLAN 107

3 of 3

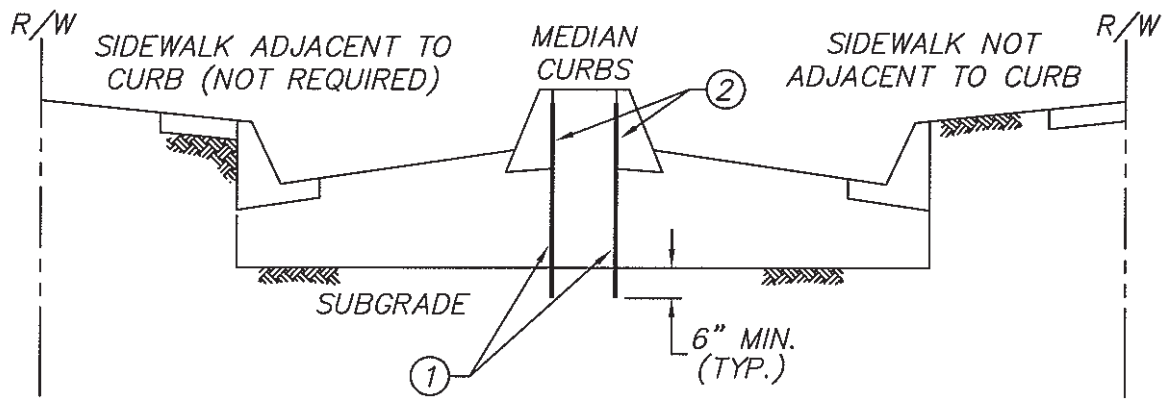

SECTION

NOTES:

1. A CONTINUOUS SINGLE 10 MIL. P.V.C. LINER OR IF TREES ARE LOCATED WITHIN THE MEDIAN A 0.08" THICK ROOT BARRIER, 36" IN DEPTH.

2. APPLY HENRY'S STD. ASPHALT EMULSION #107 TO BACK OF CURB AND BOTH SIDES OF P.V.C. LINER. KEEP TOP OF LINER 4" BELOW GRADE.

APPROVED:

CITY ENGINEER

REVISION DATE: May 2008

CITY OF HUNTINGTON BEACH

DEPARTMENT OF PUBLIC WORKS

LANDSCAPE MEDIAN MOISTURE BARRIER DETAIL

STANDARD PLAN 108

1 of 1

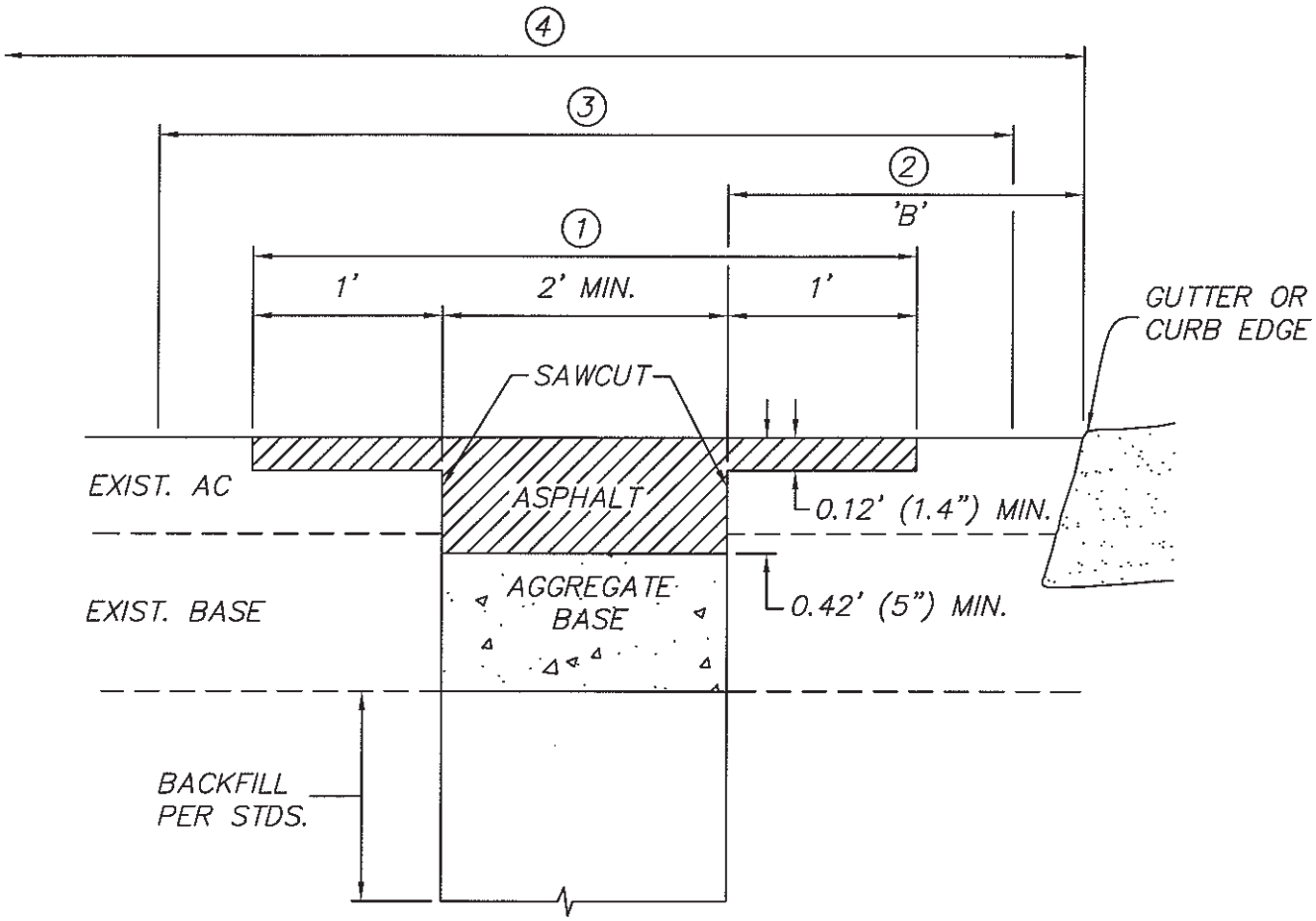

NOTES:

1. BASE A.C. TRENCH IN FLUSH WITH ADJACENT SURFACE PRIOR TO COLD PLANING AND FINISH PAVING. COLD PLANE A MINIMUM OF 4' WIDE (CENTERED ON TRENCH) AND REPLACE A.C.
2. REMOVE AND REPLACE A.C. TO EDGE OF GUTTER (TO CURB FACE IF NO GUTTER EXISTS) OR TO ADJACENT TRENCH EDGE LINE WHERE 'B' IS LESS THAN 36".
3. TYPE 1 SLURRY SEAL SHALL BE APPLIED TO ALL FINISH TRENCH SURFACES (MIN. 6" BEYOND A.C. JOIN LINE).
4. IF TRENCHING BY CITY APPROVAL IS WITHIN A STREET COVERED BY A PAVEMENT CUT MORATORIUM PER HBMC CHAPTER 12.13, A TYPE 1 SLURRY SEAL SHALL BE APPLIED TO THE LIMITS REQUIRED BY THE CITY ENGINEER.

APPROVED:

CITY ENGINEER

REVISION DATE: May 2008

CITY OF HUNTINGTON BEACH

DEPARTMENT OF PUBLIC WORKS

TRENCH / PAVEMENT REPAIR DETAIL

STANDARD PLAN
109
1 of 1

When Backfilling operations of an excavation in the traveled way, whether transverse or longitudinal, cannot be properly completed within a work day, steel plate bridging with a non-skid surface and shoring may be required to preserve unobstructed traffic flow. In such cases, the following conditions shall apply.

1. Steel Plates used for bridging must extend a minimum of 12" beyond the edges of the trench.
2. Steel plate bridging shall be installed to operate with minimum noise.
3. The trench shall be adequately shored, as mentioned in Section 516.10, to support the bridging and traffic loads.
4. Temporary paving with cold asphalt concrete shall be used to feather the edges of the plates, if plate installation by Method (2) described below is used.
5. Bridging shall be secured against displacement by using adjustable cleats, shims or other devices. Steel plate bridging and shoring shall be installed using either Method (1) or (2):

Method 1 [For speed greater than 45 mph]:
The pavement shall be cold planed to a depth equal to the thickness of the plate and to a width and length equal to the dimensions of the plate.

Method 2 [For speed less than 45 mph]:
Approach plate(s) and ending plate (if longitudinal placement) shall be attached to the roadway by a minimum of 2 dowels pre-drilled into the corners of the plate and drilled 2" into the pavement. Subsequent plates are butted to each other. Fine graded asphalt concrete shall be compacted to form ramps, maximum slope 8.5% with a minimum 12" taper to cover all edges of the steel plates. When steel plates are removed, the dowel holes in the pavement shall be backfilled with either graded fines of asphalt concrete mix, concrete slurry or equivalent slurry that is satisfactory to the City Inspector.

The contractor is responsible for maintenance of the steel plates, shoring, asphalt concrete ramps, and ensuring that they meet minimum specifications.

Use of steel plate bridging should not exceed 4 consecutive working days in any give week. Backfilling of excavations shall be covered with a minimum 3" temporary layer of cold asphalt concrete.

The following table shows the advisory minimal thickness of steel plate bridging required for a given trench width.

Trench Width	Minimum Plate Thickness
10"	½"
1'-11"	¾"
2'-7"	7/8"
3'-5"	1"
5'-3"	1 ¼"

NOTE: For spans greater than 5'-3", a structural design shall be prepared by a California Registered Civil Engineer.

All steel plates within the right of way, whether used in or out of the traveled way, shall be without deformation.

Inspectors can determine the trueness of steel plates by using a straight edge.

Steel plates used in the traveled portion of the highway shall have a surface that was manufactured with a nominal Coefficient of Friction (COF) of 0.35 as determined by California Test Method 342.

A "Steel Plate Ahead" sign with black lettering on an orange background may be used in advance of steel plate bridging. This sign is used along with any other required construction signing.

APPROVED:

CITY ENGINEER

REVISION DATE: May 2008

CITY OF HUNTINGTON BEACH

DEPARTMENT OF PUBLIC WORKS

STEEL PLATE BRIDGING

STANDARD PLAN
110
1 of 1

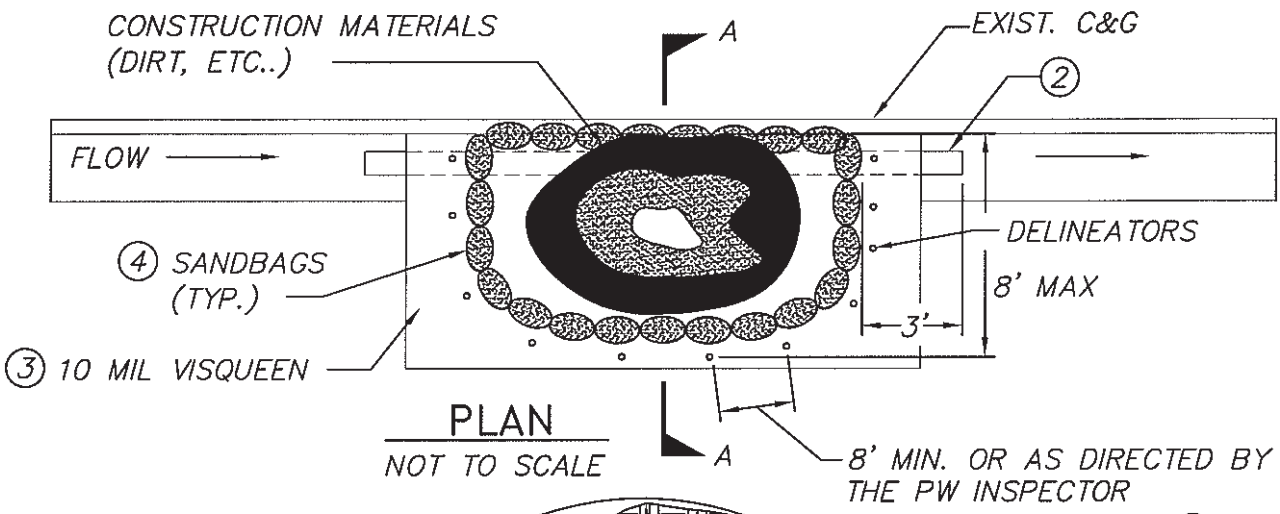

PLAN

NOT TO SCALE

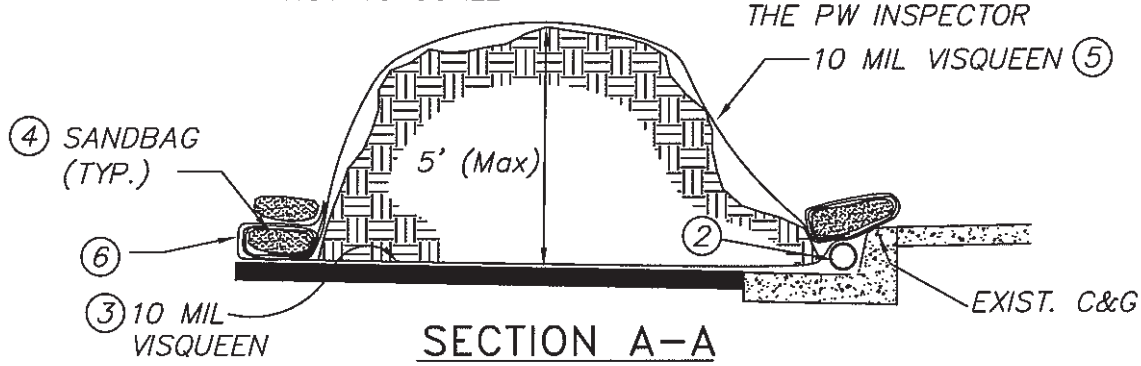

SECTION A–A

NOT TO SCALE

NOTES:

STOCKPILE MUST BE LOCATED IN FRONT OF PROPERTY CONDUCTING WORK AND A MINIMUM OF 5 FEET AWAY FROM ANY DRIVEWAY.

WHEN STORING SAND, GRAVEL, DIRT, ROCK, OR OTHER CONSTRUCTION MATERIALS IN THE PUBLIC RIGHT–OF–WAY THAT COULD POTENTIALLY ENTER THE STORM DRAIN SYSTEM; THE FOLLOWING PROTECTIVE MEASURES SHALL BE ENFORCED:

1. THE LICENSED AND INSURED CONTRACTOR SHALL OBTAIN AN OBSTRUCTION PERMIT PRIOR TO PLACEMENT OF ANY MATERIALS, EQUIPMENT, ETC. WITHIN THE PUBLIC RIGHT–OF–WAY;
2. THE CONTRACTOR SHALL PLACE A 4" PVC PIPE ALONG THE CURB TO MAINTAIN DRAINAGE ACROSS THE PROPERTY FRONTAGE. THE MINIMUM LENGTH OF THE PIPE FROM THE END OF THE SANDBAG SHALL BE 12 INCHES.
3. THE CONTRACTOR SHALL PLACE A VISQUEEN / PLASTIC (10 MIL. MIN. THICKNESS) MAT OF SUFFICIENT SIZE TO COMPLETELY CONTAIN THE MATERIAL(S) WITH A MINIMUM OVERLAP OF 3 FEET FROM THE STOCKPILE AND A SANDBAG PERIMETER BERM STACKED 1 HIGH;
4. THE CONTRACTOR SHALL WRAP THE VISQUEEN UNDER THE SANDBAG PERIMETER BERM, AND TUCK THE PLASTIC UNDER THE BOTTOM LAYER OF SANDBAGS SO THAT IT IS HELD IN PLACE;
5. AT THE END OF EACH WORK DAY, AND/OR WHEN A POTENTIAL FOR RAIN EXISTS, THE CONTRACTOR SHALL COVER THE ENTIRE STOCKPILE AND SANDBAG PERIMETER, THAT MAY BE HELD IN PLACE WITH AN ADDITIONAL LAYER OF SANDBAGS STACKED 1 HIGH OR WEIGHTED DOWN WITH AS MANY SANDBAGS AS NECESSARY TO PREVENT THE VISQUEEN PLASTIC FROM FLYING AWAY.
6. BOTH VISQUEEN TO BE WRAPPED BETWEEN THE 2 SANDBAGS.

APPROVED:

CITY ENGINEER

REVISION DATE: May 2008

CITY OF HUNTINGTON BEACH

DEPARTMENT OF PUBLIC WORKS

MATERIAL STORAGE IN R/W

STANDARD PLAN

111

1 of 1

SECTION

200

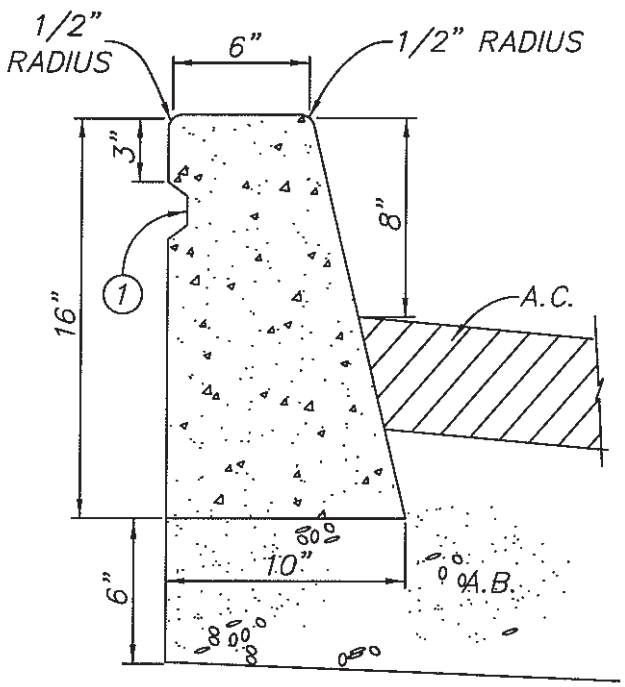

TYPE "B-1"
(MEDIAN CURBS)

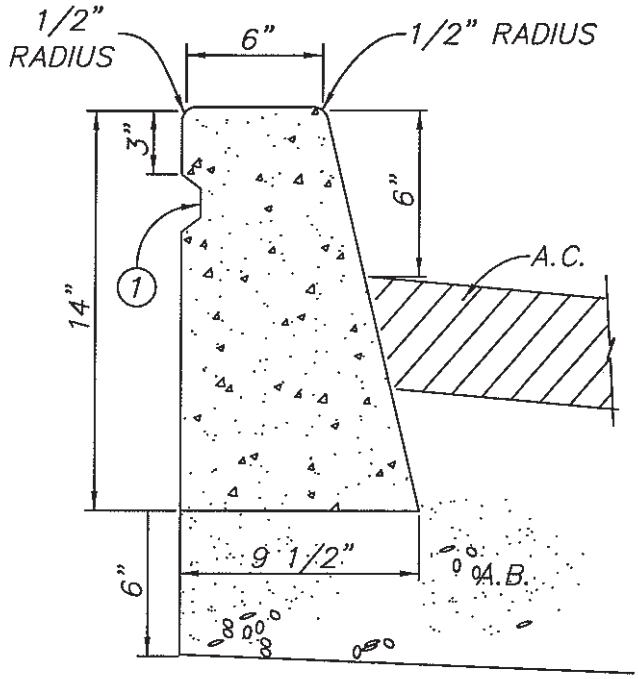

TYPE "B-2"
(PRIVATE CURBS)

NOTES:

(1) CHAMFERED KEY 1" X 2" TO BE CONSTRUCTED WHEN CONCRETE SIDEWALK IS REQUIRED TO BACK OF CURB.

GENERAL NOTES:

1. PROVIDE WEAKENED PLANE JOINT AT 10' MAXIMUM SPACING AND AT DRIVE APPROACHES, B.C.'S, E.C.'S, CROSS-GUTTERS AND CATCH BASIN TRANSITIONS.

APPROVED:

CITY ENGINEER

REVISION DATE: May 2008

CITY OF HUNTINGTON BEACH

DEPARTMENT OF PUBLIC WORKS

CURB SECTION

STANDARD PLAN
201
1 of 1

CURB FACE	4"	5"	6"	8"
'X'	10.5"	11.5"	12.5"	14.5"
'Y'	1"	1.25"	1.5"	2"
'Z'	31"	31.25"	31.5"	32"

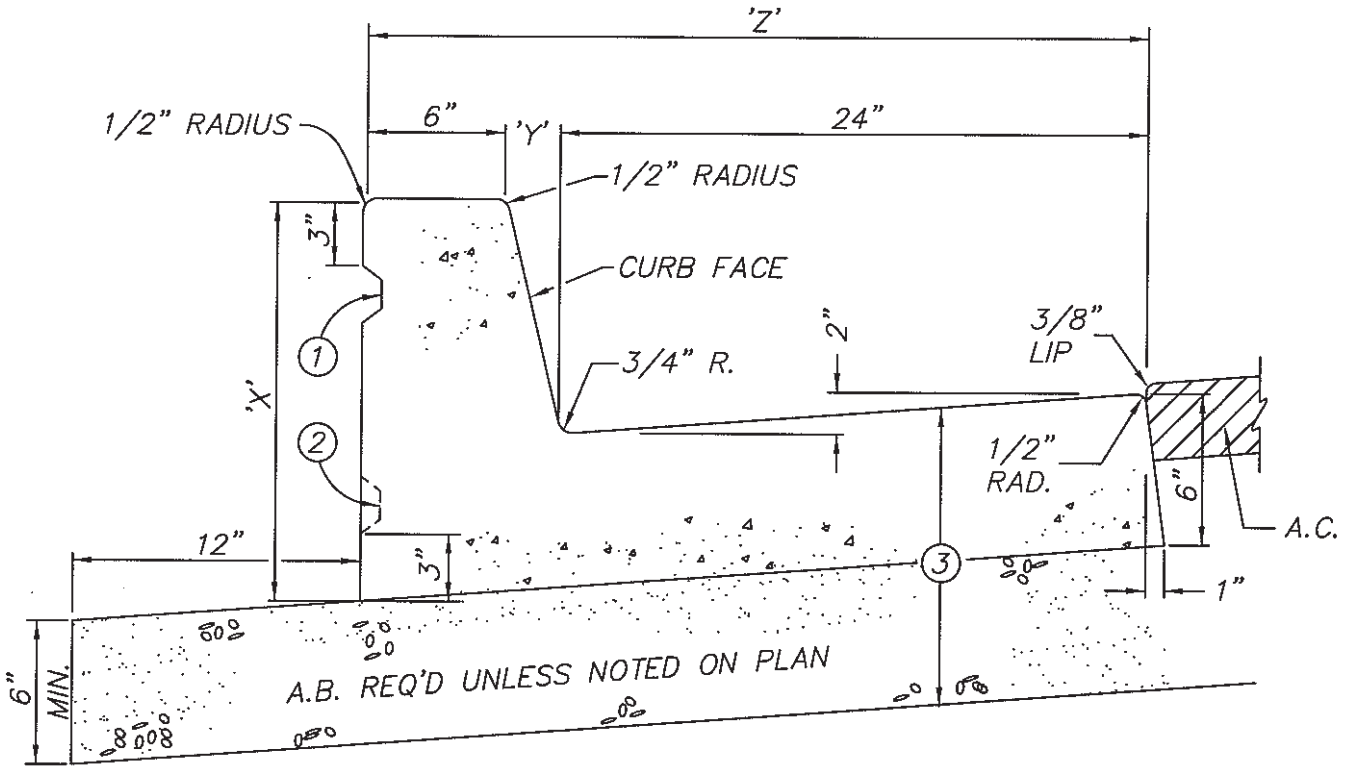

NOTES:

1. CHAMFERED 1" X 2" KEY TO BE CONSTRUCTED WHEN CONCRETE SIDEWALK IS REQUIRED BACK OF CURB.
2. KEY LOCATION AT DRIVEWAYS (0" CF).
3. WHEN CURB & GUTTER IS LOCATED ADJACENT TO CONCRETE BUS PAD, STRUCTURAL SECTION SHALL MATCH THAT OF BUS PAD.
   A. INSTALL 12" LONG #4 REBAR DOWEL @ 24" O.C.
   B. INSTALL LONGITUDINAL REBAR IN GUTTER PLATE, #4 @ 12" O.C.

GENERAL NOTES:

1. PROVIDE WEAKENED PLANE AT 10' MAX. SPACING AND AT DRIVE APPROACHES, B.C.'S, E.C.'S, CROSS GUTTERS AND CATCH BASIN TRANSITIONS.
2. 6" MINIMUM CURB FACE, UNLESS OTHERWISE APPROVED BY THE CITY ENGINEER
3. 8" CURB FACE ON ARTERIALS

APPROVED:

CITY ENGINEER

REVISION DATE: May 2008

CITY OF HUNTINGTON BEACH

DEPARTMENT OF PUBLIC WORKS

CURB AND GUTTER SECTION

STANDARD PLAN 202

1 of 1

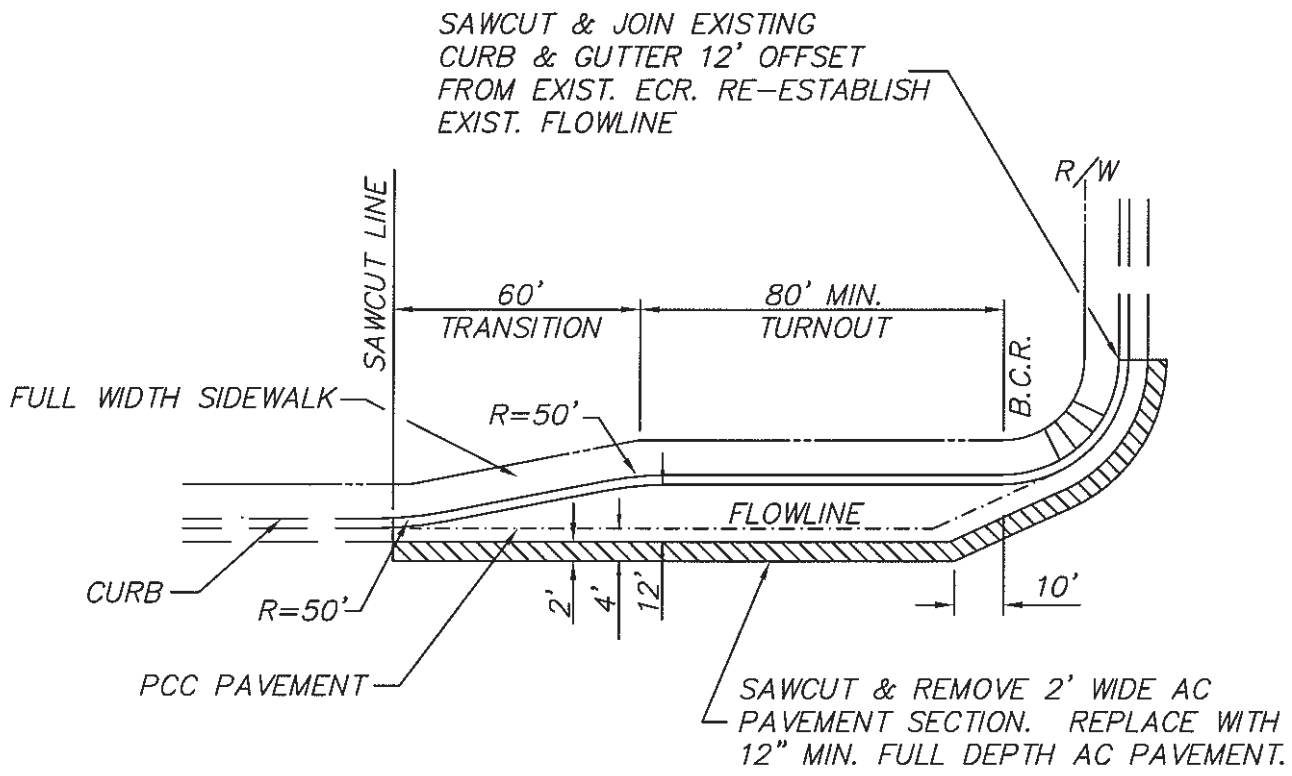

GENERAL NOTES:

1. P.C.C. PAVEMENT THICKNESS SHALL BE 12" W/#4 @ 18" O.C. EACH WAY OVER NATIVE SOIL.
2. BUS SHELTERS SHALL BE SET BACK FROM THE FACE OF THE CURB A MINIMUM CLEAR DISTANCE OF 4' OR PEDESTRIAN TRAVEL WAY.
3. CURB SHALL BE POURED MONOLITHIC WITH P.C.C. PAVEMENT.
4. MODIFICATIONS OF THIS STANDARD SHALL BE REVIEWED FOR ACCEPTABILITY BY THE CITY ENGINEER.
5. CONSTRUCT CONTROL JOINTS @ 15' INTERVALS.
6. CATCH BASINS SHOULD NOT BE LOCATED IN BUS TURNOUTS IF POSSIBLE.
7. DRIVEWAYS SHALL NOT BE LOCATED IN BUS TURNOUTS.
8. CURB HEIGHTS TO VARY TO MATCH EXISTING GRADE BEHIND CURB; 5" MIN., 8" MAX.
9. CONSTRUCTION PLAN AND TOPO SURVEY SHALL BE PROVIDED PRIOR TO APPROVAL BY THE CITY ENGINEER.
10. CONCRETE SHALL BE CLASS 560-C-3250.

APPROVED:

CITY ENGINEER

REVISION DATE: May 2008

CITY OF HUNTINGTON BEACH

DEPARTMENT OF PUBLIC WORKS

CORNER BUS TURNOUT

STANDARD PLAN
203
1 of 2

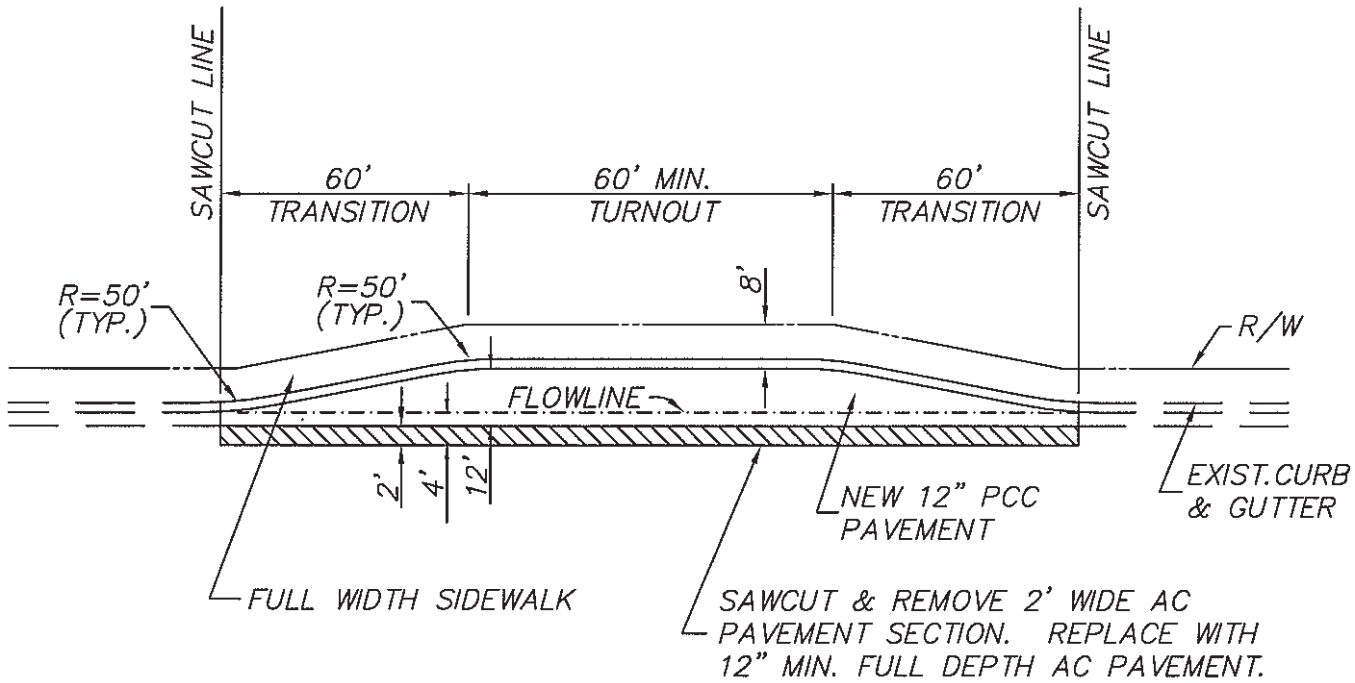

GENERAL NOTES:

1. P.C.C. PAVEMENT THICKNESS SHALL BE 12" W/#4 @ 18" O.C. EACH WAY OVER NATIVE SOIL.
2. BUS SHELTERS SHALL BE SET BACK FROM THE FACE OF THE CURB A MINIMUM CLEAR DISTANCE OF 4' FOR PEDESTRIAN TRAVEL WAY.
3. CURB SHALL BE POURED MONOLITHIC WITH P.C.C. PAVEMENT.
4. MODIFICATIONS OF THIS STANDARD SHALL BE REVIEWED FOR ACCEPTABILITY BY THE CITY ENGINEER.
5. CONSTRUCT CONTROL JOINTS @ 15' INTERVALS.
6. CATCH BASINS SHOULD NOT BE LOCATED IN BUS TURNOUTS IF POSSIBLE.
7. DRIVEWAYS SHALL NOT BE LOCATED IN BUS TURNOUTS.
8. CURB HEIGHTS TO VARY TO MATCH EXISTING GRADE BEHIND CURB; 5" MIN., 8" MAX.
9. CONSTRUCTION PLAN AND TOPO SURVEY SHALL BE PROVIDED PRIOR TO APPROVAL BY THE CITY ENGINEER.
10. CONCRETE SHALL BE CLASS 560-C-3250.

APPROVED:

CITY ENGINEER

REVISION DATE: May 2008

CITY OF HUNTINGTON BEACH

DEPARTMENT OF PUBLIC WORKS

MID-BLOCK BUS TURNOUT

STANDARD PLAN
203
2 of 2

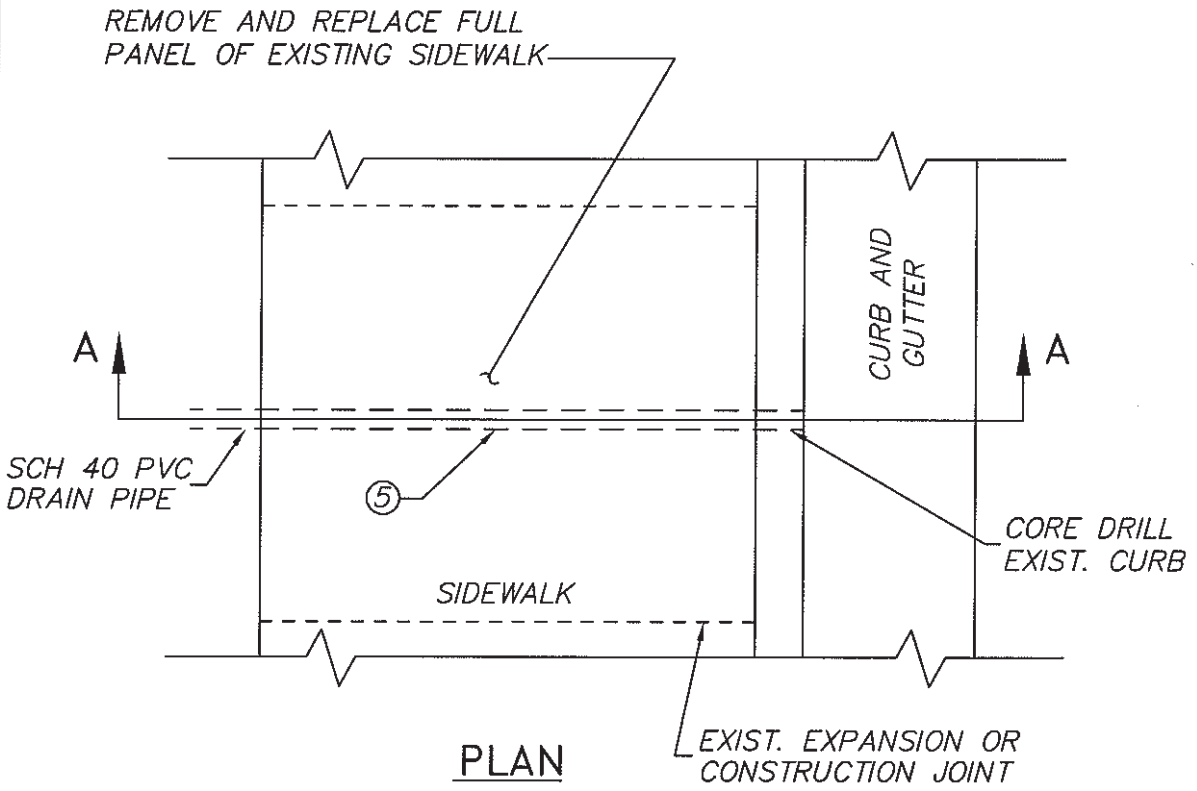

PLAN

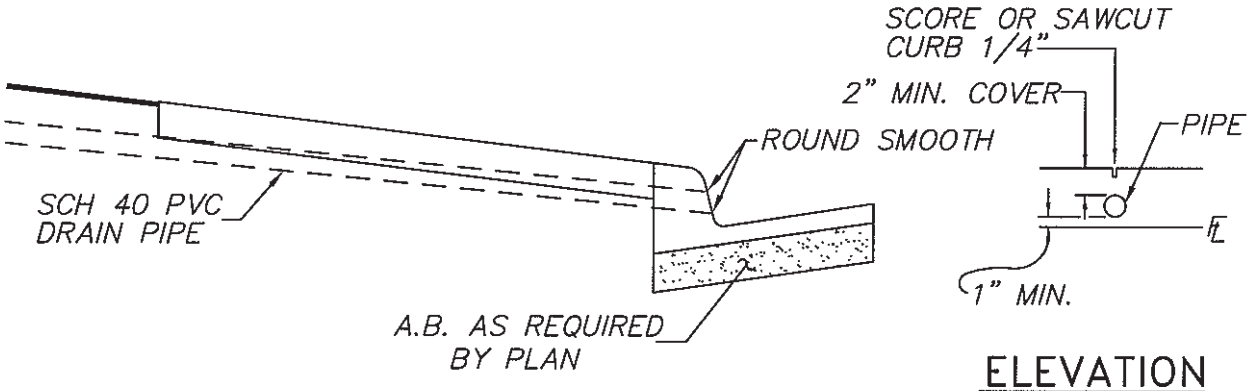

ELEVATION

SECTION A–A

GENERAL NOTES:

1. CURB DRAIN ALLOWED ONLY IF APPROVED BY THE CITY ENGINEER AS NECESSARY TO DRAIN LOT (LOT NORMALLY SHOULD BE GRADED TO SHEET DRAIN TO STREET).
2. NO MORE THAN 2 CURB DRAINS PERMITTED FOR 1 LOT.
3. IF CURB IS CORE DRILLED, FILL ANNULAR SPACE BETWEEN PIPE AND CURB WITH GROUT.
4. MAX. PIPE SIZE TO BE 3" DIA. FOR 6" CURB AND 4" DIA. FOR 8" CURB.

5 BORING UNDER EXISTING SIDEWALK, SUBJECT TO APPROVAL OF THE INSPECTOR.

APPROVED: CITY ENGINEER	CITY OF HUNTINGTON BEACH DEPARTMENT OF PUBLIC WORKS	
REVISION DATE: May 2008	RESIDENTIAL LOT DRAIN	STANDARD PLAN 204 1 of 1

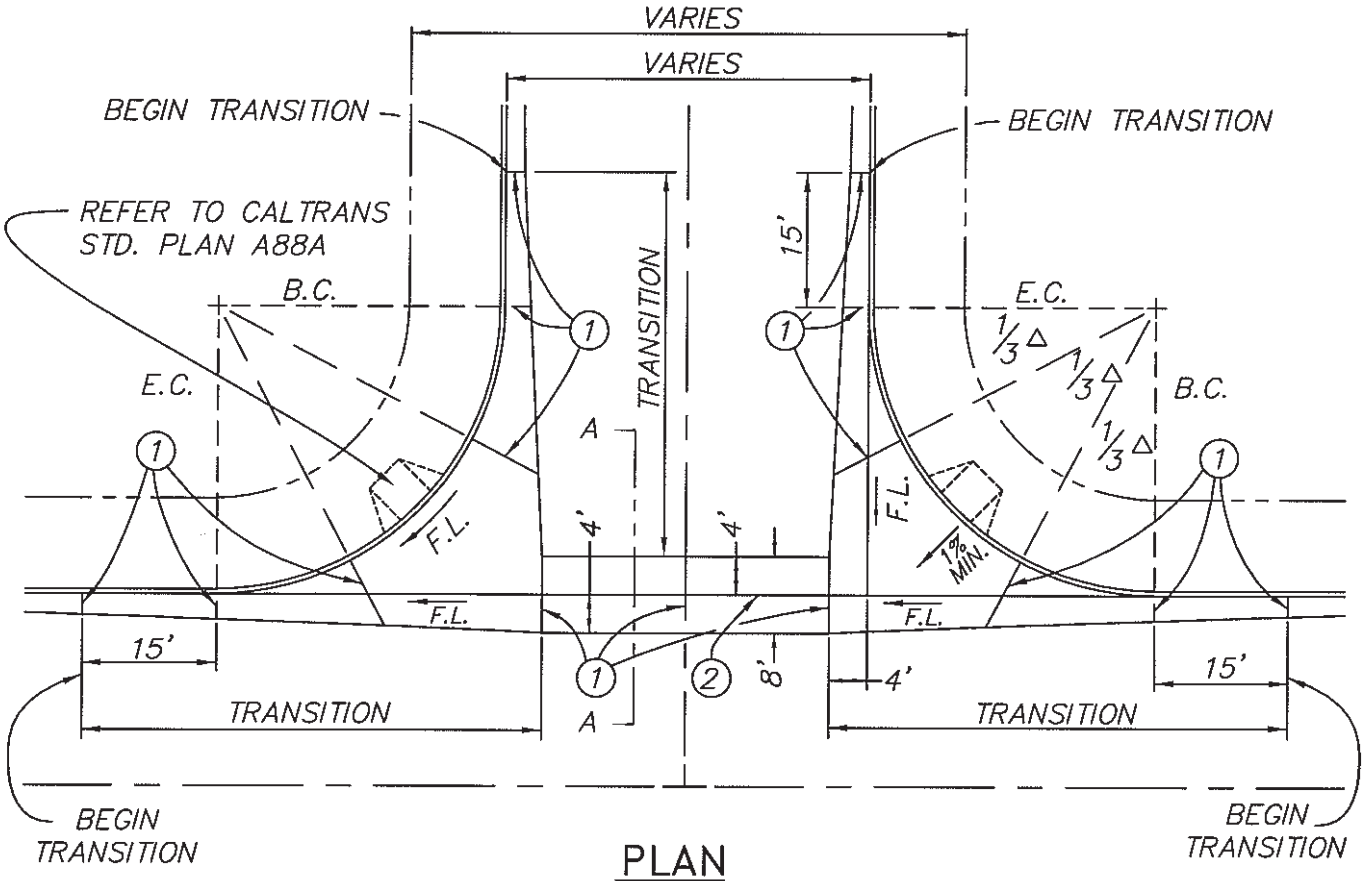

PLAN

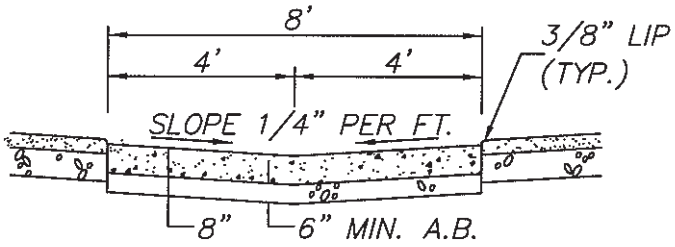

SECTION A–A

NOTES:

1. PROVIDE WEAKENED PLANE OR QUICK JOINT OR APPROVED EQUAL.
2. ROUGH BROOM FINISH WITH 8" FLOWLINE SMOOTH TROWELED.

GENERAL NOTES:

1. MINIMUM CROSS GUTTER SLOPE SHALL BE 0.30%.

APPROVED:

CITY ENGINEER

REVISION DATE: May 2008

CITY OF HUNTINGTON BEACH

DEPARTMENT OF PUBLIC WORKS

CONCRETE CROSS GUTTER

STANDARD PLAN 205

1 of 1

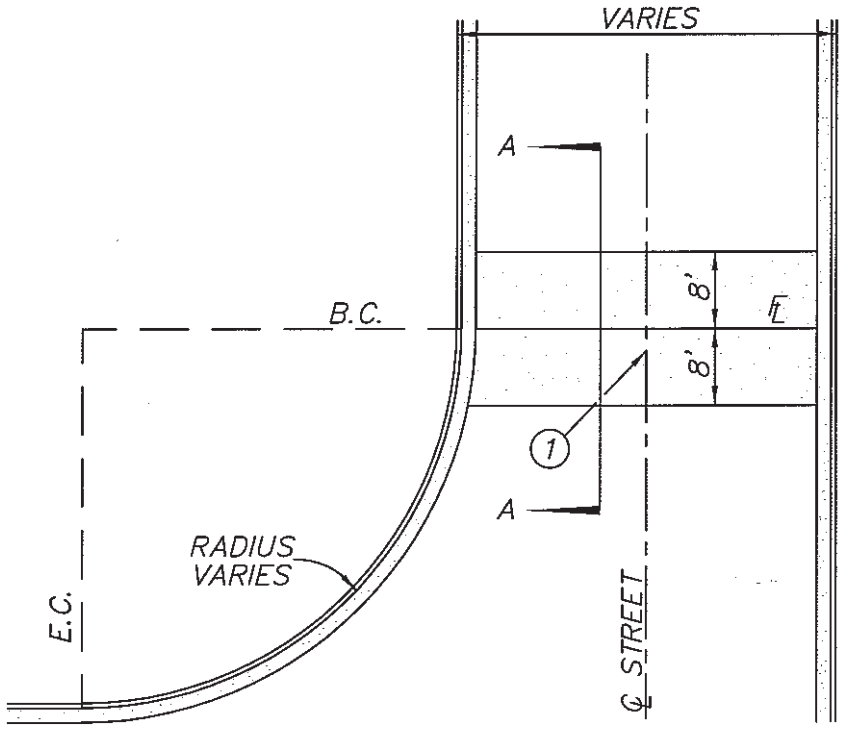

PLAN

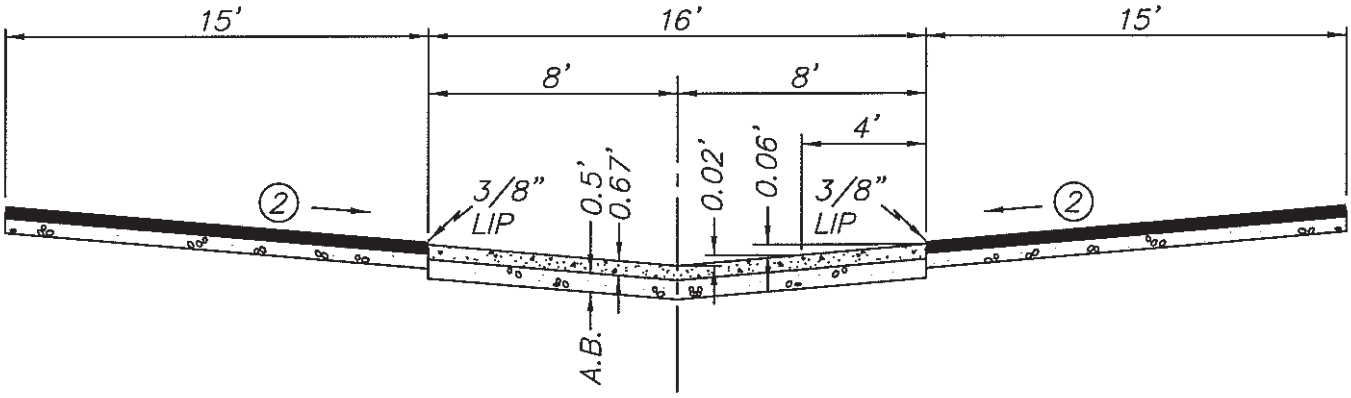

SECTION A–A

NOTES:

1. WEAKENED PLANE.
2. SLOPE STREET C.L. TO REGAIN CROWN.

GENERAL NOTE:

1. SPECIAL PERMISSION FROM THE CITY ENGINEER REQUIRED IN ORDER TO USE THIS STANDARD.

APPROVED:

CITY ENGINEER

REVISION DATE: MAY 2008

CITY OF HUNTINGTON BEACH

DEPARTMENT OF PUBLIC WORKS

16' CONCRETE CROSS GUTTER

STANDARD PLAN 206

1 of 1

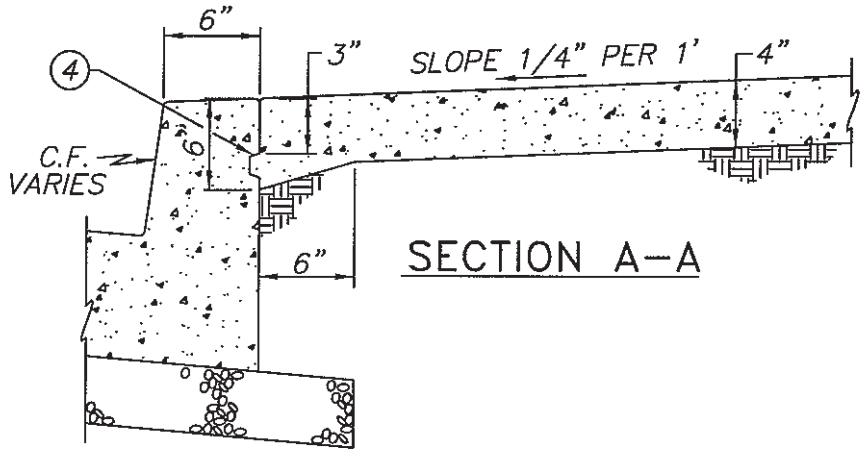

SECTION A–A

* 'Z'	MAJOR STREET	MINOR STREET
35'	MAJOR ARTERIAL	ALL STREETS
35'	PRIMARY ARTERIAL	PRIMARY, SECONDARY, COLLECTOR
35'	PRIMARY ARTERIAL	LOCAL
35'	SECONDARY ARTERIAL	SECONDARY, LOCAL, COLLECTOR
25'	COLLECTOR	COLLECTOR, LOCAL
25'	LOCAL	LOCAL

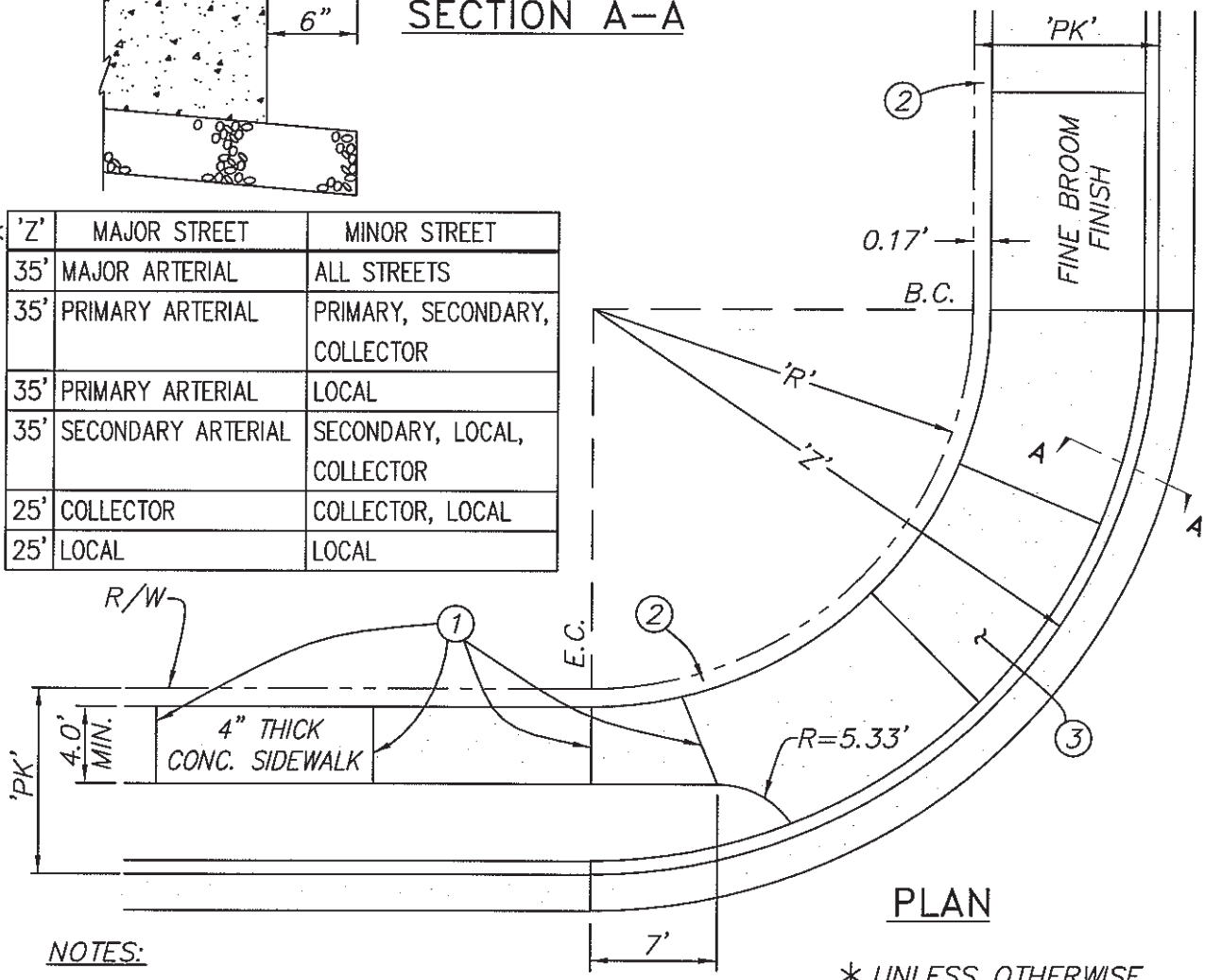

PLAN

* UNLESS OTHERWISE APPROVED BY THE CITY ENGINEER.

NOTES:

1. WEAKENED PLANE JOINT AT 10' MAX. O.C.
2. GROUT BETWEEN SIDEWALK AND BLOCKWALL.
3. CURB RAMP TO MEET CURRENT ADA STANDARDS.
4. CHAMFERED 1" X 2" KEY.
5. SIDEWALK WIDTH SHALL MEET CURRENT ADA STANDARDS.

GENERAL NOTES:

1. 'R' TO BE DETERMINED BY SUBTRACTING THE SMALLER 'PK' FROM 'Z'.

APPROVED:

CITY ENGINEER

REVISION DATE: May 2008

CITY OF HUNTINGTON BEACH

DEPARTMENT OF PUBLIC WORKS

PARKWAY AND SIDEWALK

STANDARD PLAN 207

1 of 1

'X'=24" WHERE C.F. IS LESS THAN OR EQUAL TO 6".
36" WHERE C.F. IS GREATER THAN 6".

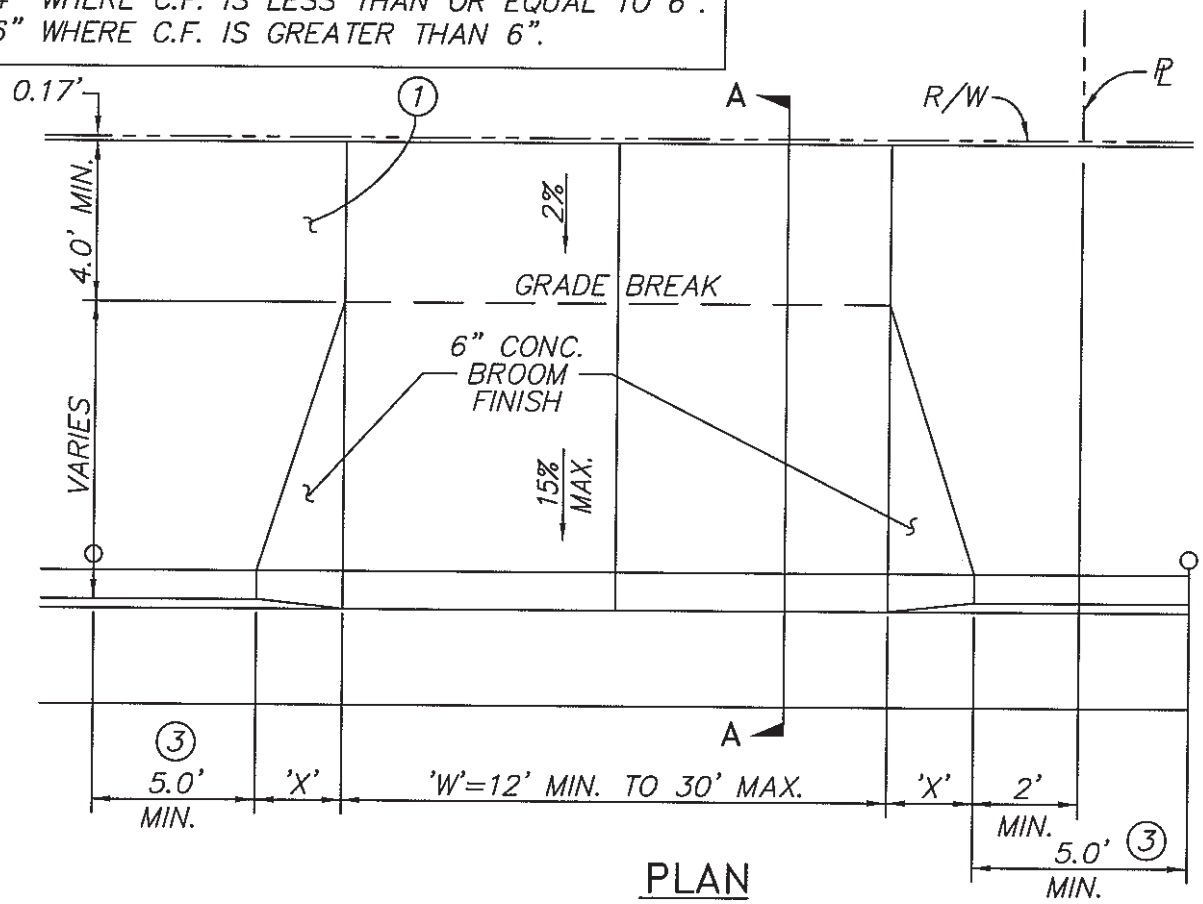

PLAN

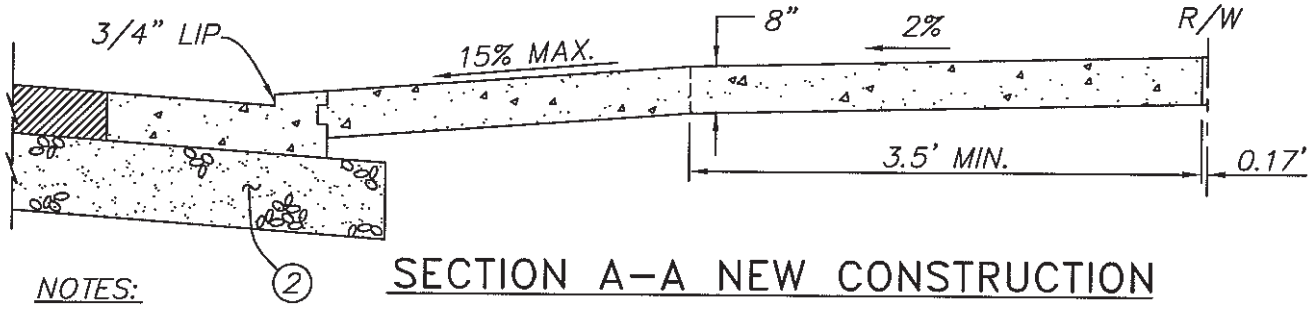

SECTION A–A NEW CONSTRUCTION

NOTES:

1. CONSTRUCT SIDEWALK PER STD. PLAN 207.
2. A.B. AS REQ'D PER STD. PLAN 202.
3. 5.0' MIN. CLEARANCE FROM TOP OF 'X' TO ANY ABOVE–GROUND OBSTACLE (I.E. SIGN, POLE, TREE, ETC.) FOR ANY WATER APPURTENANCE SEE WATER STANDARD PLANS, UNLESS OTHERWISE APPROVED BY THE CITY ENGINEER.

GENERAL NOTES:

1. 22' MIN. OF FULL HEIGHT CURB IS REQUIRED BETWEEN DRIVEWAYS SERVING THE SAME PARCEL, UNLESS OTHERWISE APPROVED BY THE CITY ENGINEER.
2. CONCRETE SHALL BE CLASS 520–C–2500.

APPROVED:

CITY ENGINEER

REVISION DATE: May 2008

CITY OF HUNTINGTON BEACH

DEPARTMENT OF PUBLIC WORKS

RESIDENTIAL DRIVE APPROACH

STANDARD PLAN
209
1 of 1

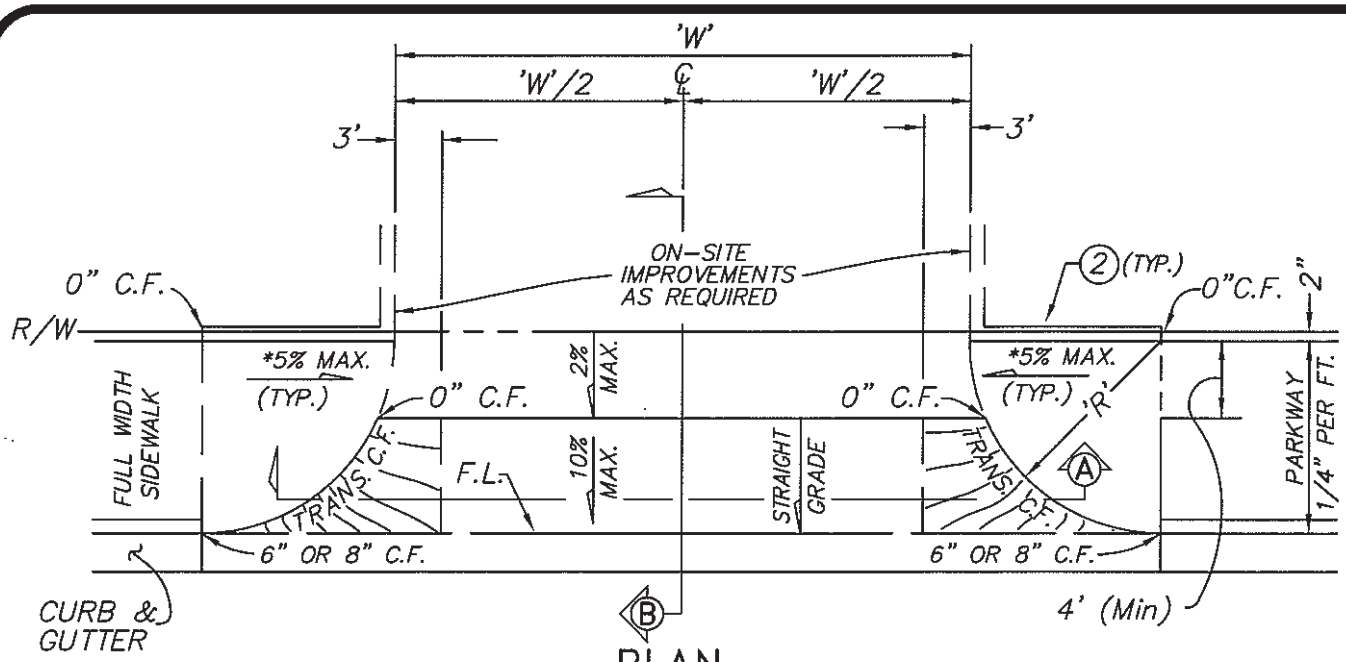

PLAN

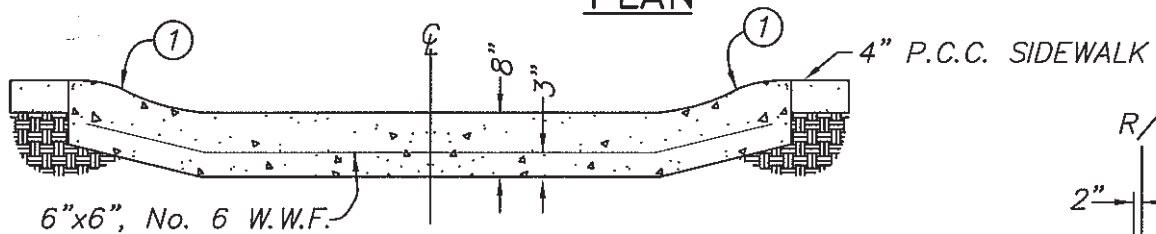

SECTION "A"

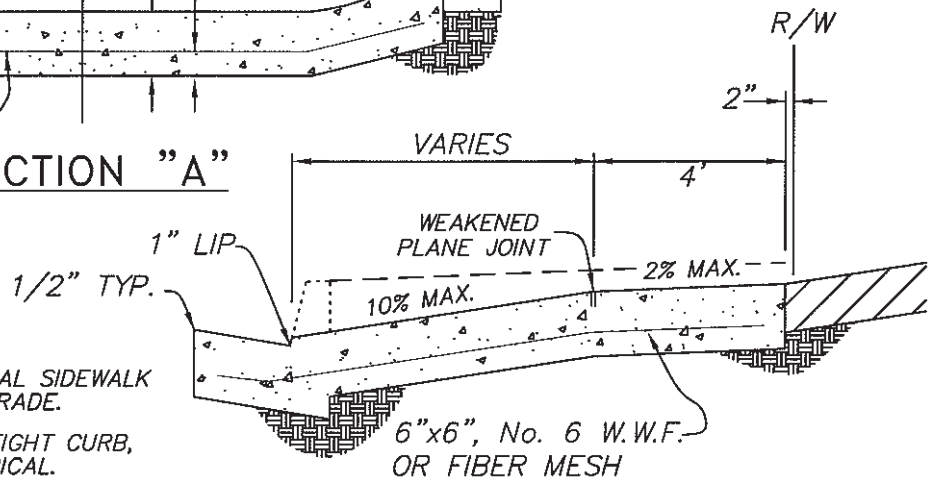

SECTION "B"

NOTES:

1. ROLL BLEND FROM NORMAL SIDEWALK GRADE TO GUTTER LIP GRADE.
2. CONSTRUCT VARIABLE HEIGHT CURB, PER STD. PLAN 201, TYPICAL.

GENERAL NOTES:

1. DIMENSIONS 'W', 'R', AND PARKWAY WIDTH SHALL BE SHOWN ON PLANS.
2. 'R' EQUALS PARKWAY WIDTH BUT IT SHALL NOT BE LESS THAN 8' NOR MORE THAN 15'.
3. A COURSE BROOM FINISH TRANSVERSE TO THE LINE OF TRAFFIC SHALL BE USED ON THE APPROACH OTHER THAN THE CURB AND GUTTER AREA. THE CURB AND GUTTER AREA SHALL HAVE A LIGHT BROOM FINISH PARALLEL TO THE LINE OF TRAFFIC.
4. VERTICAL OBJECTS SUCH AS FIRE HYDRANTS AND POWER POLES SHALL BE A MINIMUM OF 5' FROM THE B.C.R. AND/OR E.C.R.

*5. SLOPES EXCEEDING 5% SHALL REQUIRE A SEPARATE DETAIL FOR THE ACCESS RAMPS.

6. CONCRETE SHALL BE 560-C-2500.

APPROVED:

CITY ENGINEER

REVISION DATE: May 2008

CITY OF HUNTINGTON BEACH

DEPARTMENT OF PUBLIC WORKS

COMMERCIAL AND INDUSTRIAL DRIVE APPROACH

STANDARD PLAN 211

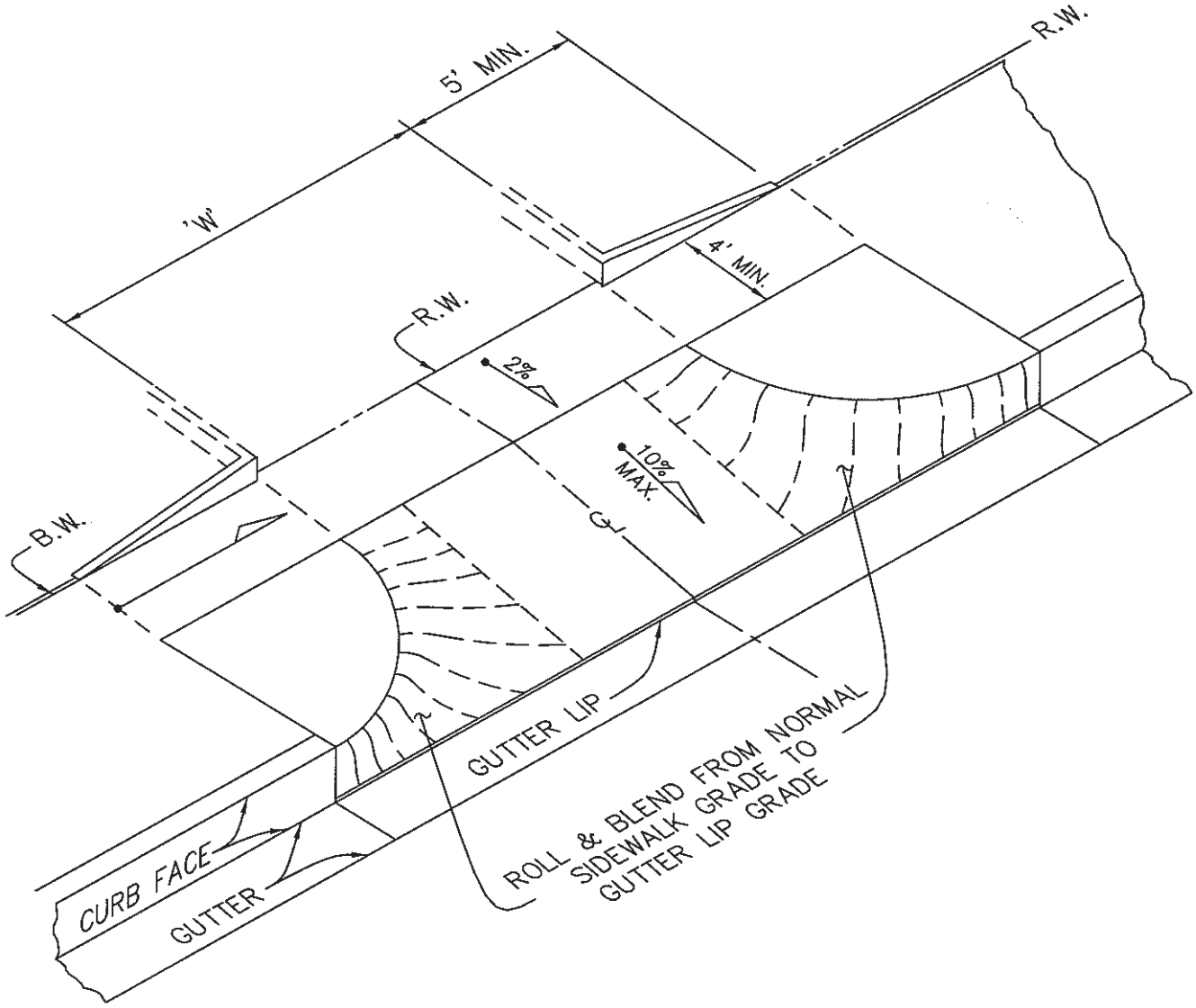

SPECIFICATION FOR LOCATION OF DRIVEWAYS:

1. 'W'=26' MINIMUM TO 45' MAXIMUM WIDTH. UNLESS OTHERWISE DETERMINED BY THE CITY ENGINEER.
2. TOTAL DRIVEWAY WIDTHS SHALL NOT EXCEED 70% OF THE FRONTAGE.
3. THE SAME PARCEL SHALL HAVE 22' MINIMUM OF FULL HEIGHT CURB BETWEEN DRIVEWAYS.
4. ALL PLANNED DRIVEWAY OPENINGS SHALL BE SUBMITTED TO THE DEPARTMENT OF PUBLIC WORKS, ENGINEERING DIVISION, FOR REVIEW AND APPROVAL. THE NUMBER OF DRIVEWAY OPENINGS SHALL BE NO MORE THAN ARE NEEDED TO ADEQUATELY SERVE THE PARCEL.
5. SEE STD. PLAN 211, SHEET 1 of 2, FOR DIMENSION AND SECTION DETAILS.

APPROVED:

CITY ENGINEER

REVISION DATE: May 2008

CITY OF HUNTINGTON BEACH

DEPARTMENT OF PUBLIC WORKS

COMMERCIAL AND INDUSTRIAL DRIVE APPROACH

STANDARD PLAN 211

NOTES:

1. AT STREET INTERSECTION WHERE TRAFFIC SIGNALS EXIST, OR ARE POSITIONED, THE CONDUIT SHALL BE INSTALLED AT A DEPTH OF 24".
2. WHERE STREET SECTION IS GREATER THAN 18" IN THICKNESS, CONDUIT SHALL BE INSTALLED AT A DEPTH OF 6" GREATER THAN THE REQUIRED STREET SECTION.

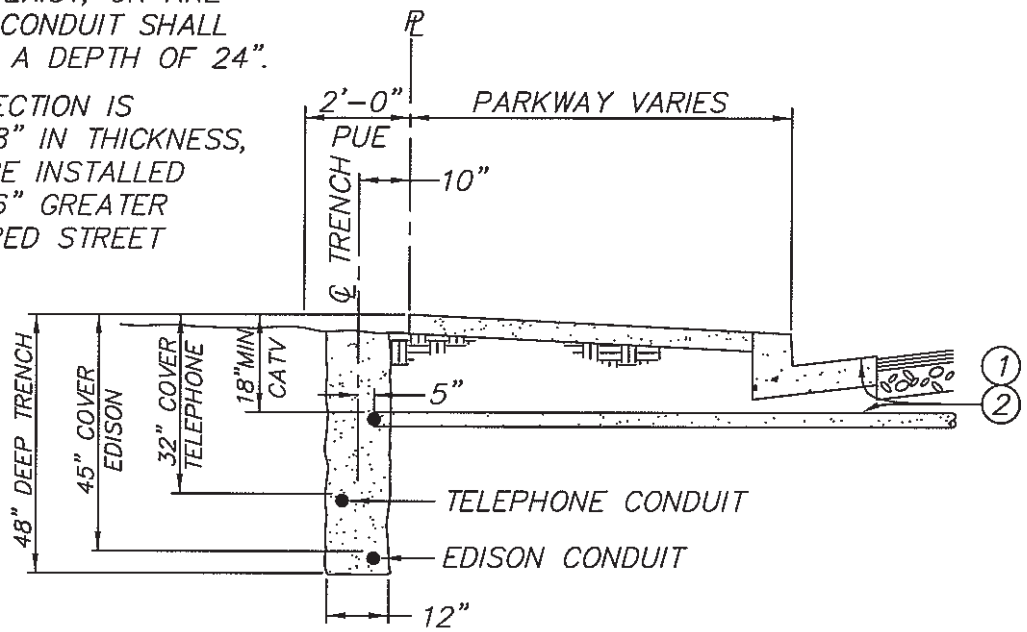

DETAIL "A"

FOR USE WHERE UTILITY FACILITIES ARE TO BE INSTALLED WITHIN THE 2' PUBLIC UTILITY EASEMENT

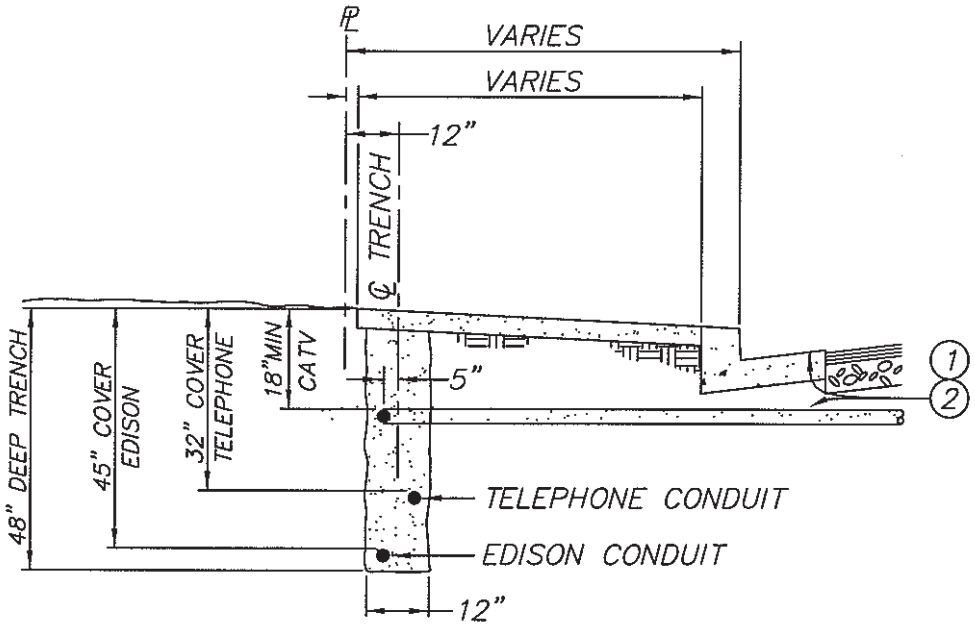

DETAIL "B"

FOR USE WHERE UTILITY FACILITIES ARE TO BE INSTALLED IN PARKWAY

APPROVED:

CITY ENGINEER

REVISION DATE: May 2008

CITY OF HUNTINGTON BEACH

DEPARTMENT OF PUBLIC WORKS

UTILITY CONDUIT LOCATIONS IN R/W

STANDARD PLAN 215

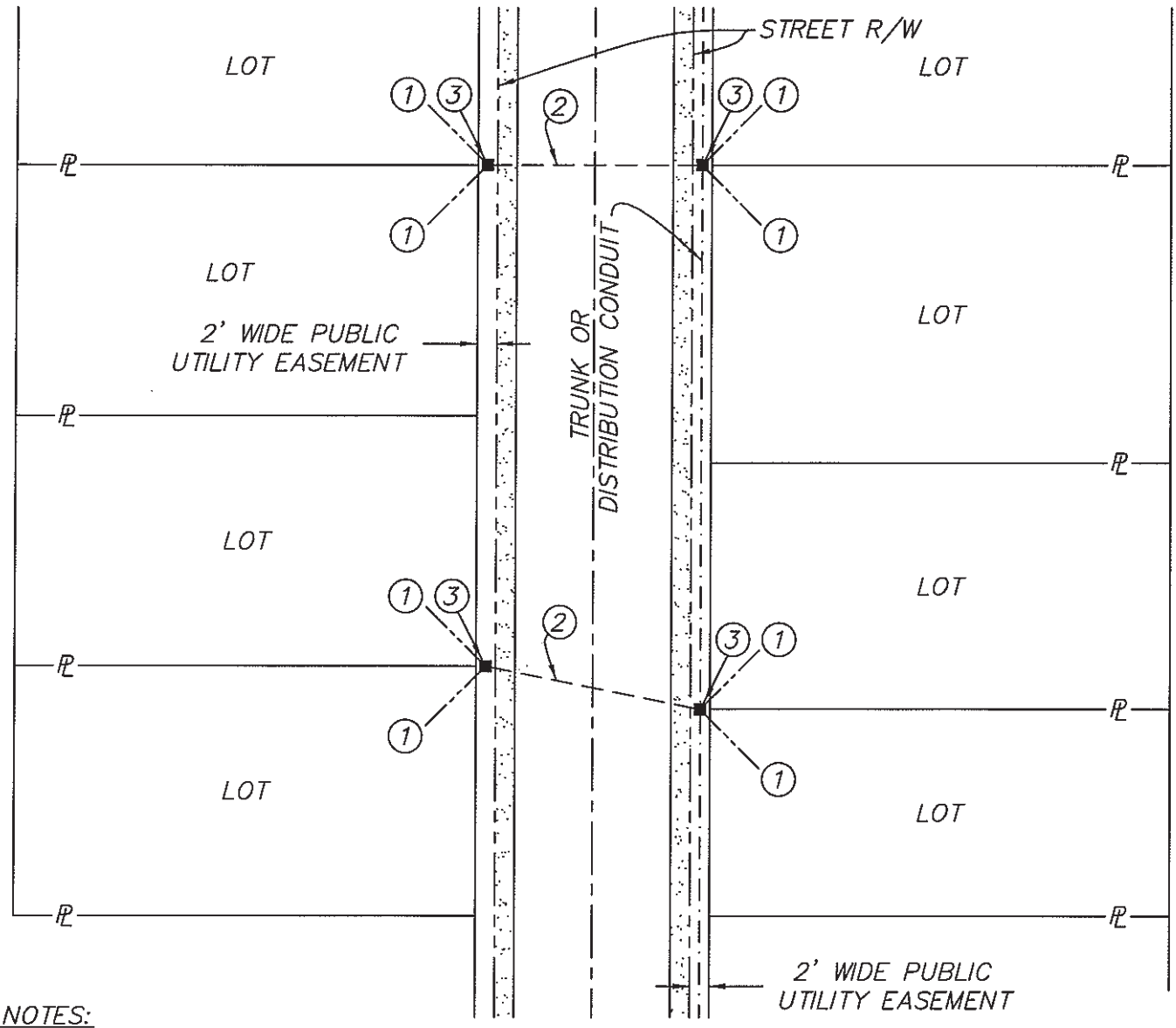

NOTES:

1. SERVICE LATERALS SHALL BE STUBBED TO STREET RIGHT OF WAY OR LIMITS OF PUBLIC UTILITY EASEMENT.
2. CONDUIT PER UTILITY CO.
3. PULL BOX PER UTILITY CO. REFER TO STANDARD PLAN NO. 217.

GENERAL NOTES:

1. STREET CROSSINGS SHALL BE PERPENDICULAR TO R/W, OR OTHERWISE APPROVED BY THE CITY ENGINEER.
2. CONDUIT INSTALLATION SHALL BE DETERMINED BY THE CITY ENGINEER.
3. ALL RESURFACING SHALL BE DETERMINED BY THE CITY ENGINEER.

APPROVED:

CITY ENGINEER

REVISION DATE: May 2008

CITY OF HUNTINGTON BEACH

DEPARTMENT OF PUBLIC WORKS

UTILITY CONDUIT LOCATIONS IN R/W

STANDARD PLAN 215

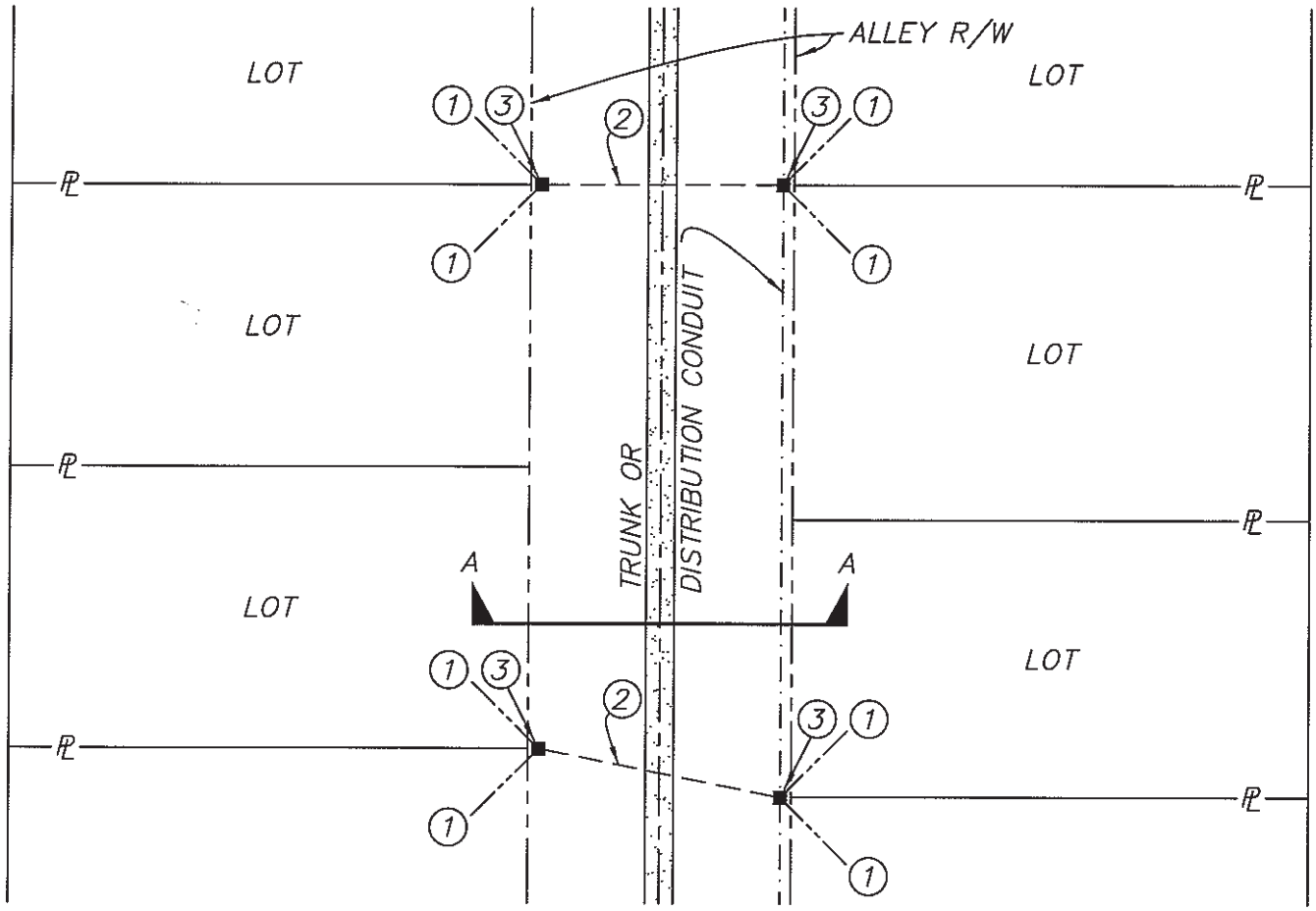

PLAN

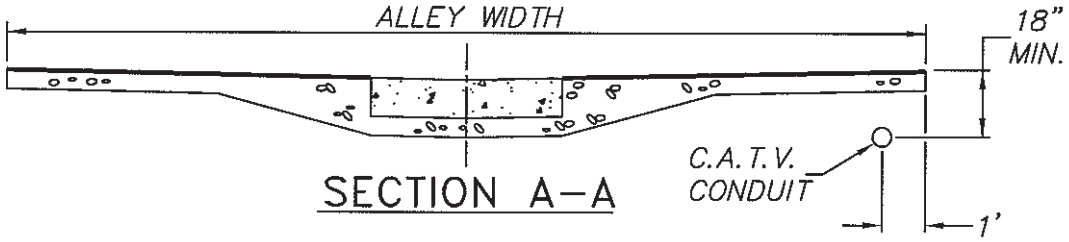

SECTION A–A

NOTES:

(1) 1" SERVICE LATERALS SHALL BE INSTALLED ON COMMON PROPERTY LINES AND STUBBED TO RIGHT OF WAY.

(2) CONDUIT SHALL BE PER UTILITY CO.

(3) PULL BOX PER UTILITY CO.

GENERAL NOTES:

1. MAIN LINE CONDUIT TO BE LOCATED ON SAME SIDE AS EDISON SYSTEM (SEE STD. PLAN 215, SHEET 1 of 3).
2. CONDUIT INSTALLATION SHALL BE DETERMINED BY THE CITY ENGINEER.
3. ALL RESURFACING SHALL BE DETERMINED BY THE CITY ENGINEER.

APPROVED:

CITY ENGINEER

REVISION DATE: May 2008

CITY OF HUNTINGTON BEACH

DEPARTMENT OF PUBLIC WORKS

UTILITY CONDUIT LOCATION IN ALLEY

STANDARD PLAN 215

3 of 3

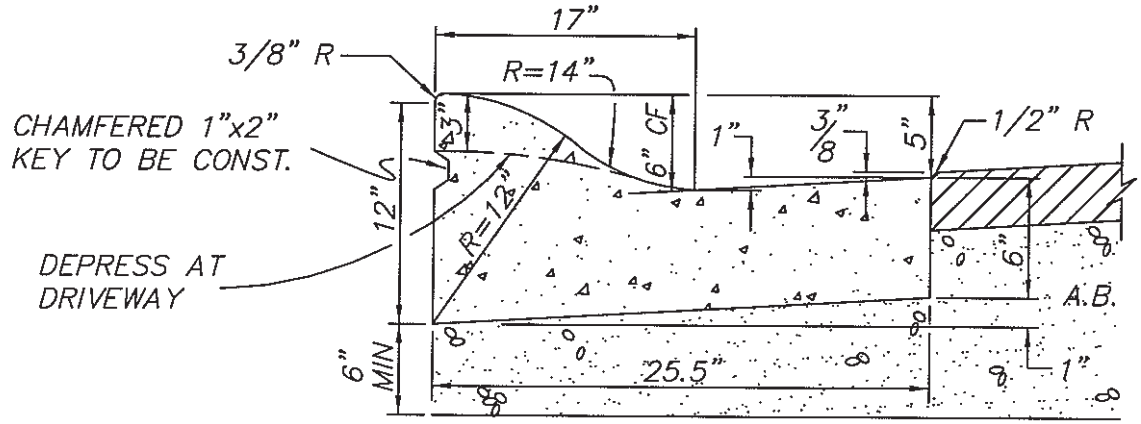

TYP. CONC. ROLLED CURB DETAIL 6" CF

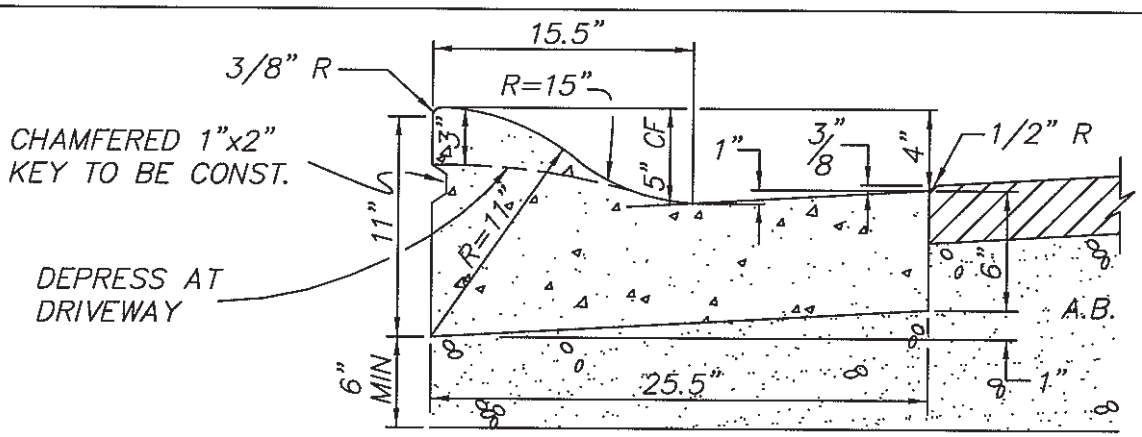

TYP. CONC. ROLLED CURB DETAIL 5" CF

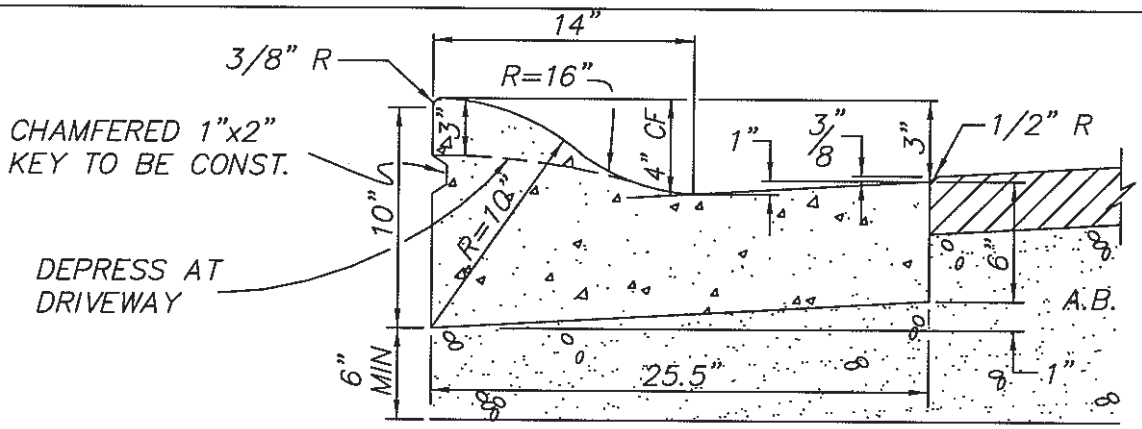

TYP. CONC. ROLLED CURB DETAIL 4" CF

GENERAL NOTES:

1. SPECIAL PERMISSION FROM THE CITY ENGINEER IS REQUIRED IN ORDER TO USE THIS STANDARD.

APPROVED:

CITY ENGINEER

REVISION DATE: May 2008

CITY OF HUNTINGTON BEACH

DEPARTMENT OF PUBLIC WORKS

PRIVATE STREET–
ROLLED CURB

STANDARD PLAN
216
1 of 1

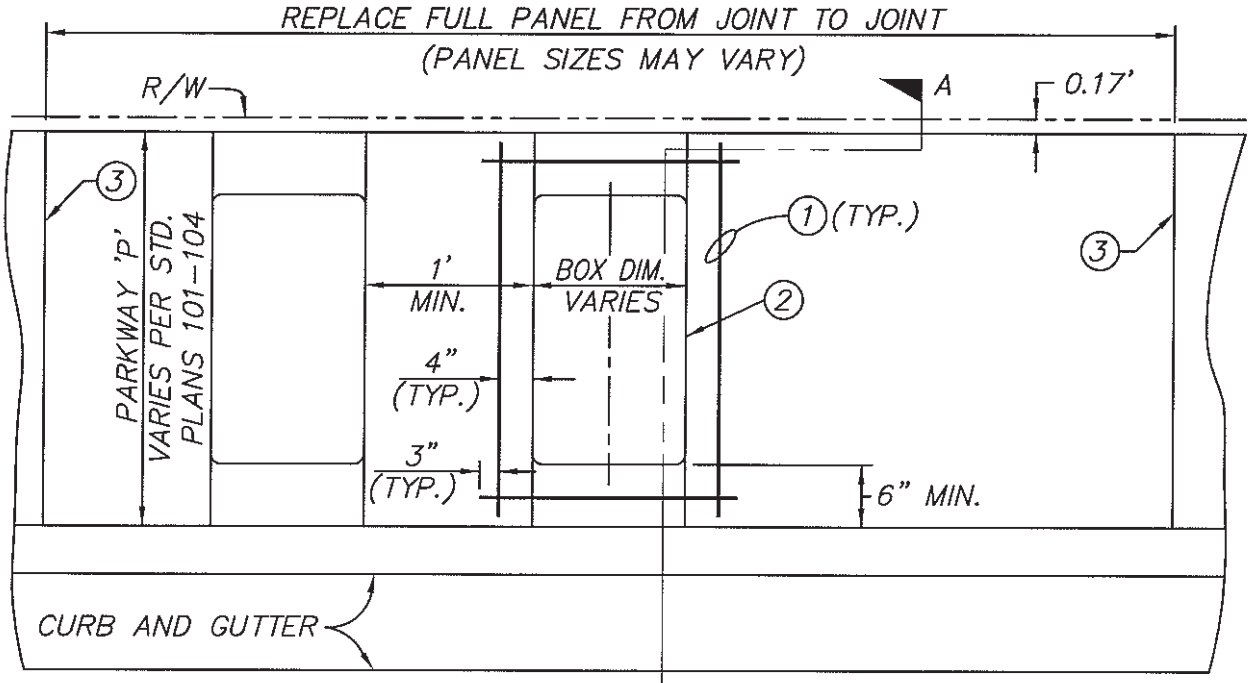

PLAN

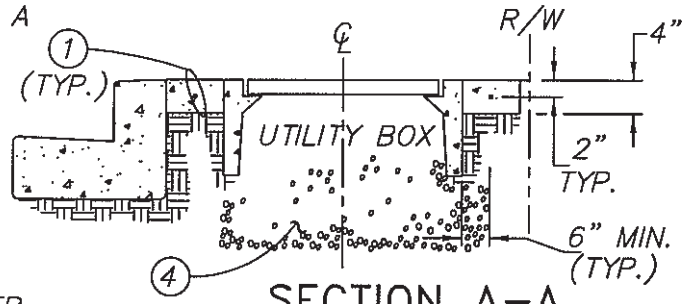

SECTION A-A

NOTES:

1. #4 REBAR SHALL BE INSTALLED WHENEVER UTILITY BOX OCCUPIES MORE THAN 70% OF SIDEWALK DIMENSION 'D'.
2. LOCATION OF UTILITY BOXES SHALL BE ADJACENT TO CURB UNLESS OTHERWISE APPROVED ON PLANS. BOX AND LOCATION SHALL BE SHOWN ON PLANS. PEDESTALS AND OTHER ABOVE GRADE OBJECTS SHALL BE SHOWN AND LOCATED BY DIMENSIONS TO THE NEAREST 0.1'
3. SAW CUT OR REMOVE TO EXISTING JOINT.
4. ALL UTILITY BOXES SHALL BE PLACED ON A COMPACTED 6" MIN. PEA GRAVEL OR CRUSHED 3/4" ROCK BEDDING. WATER METER BOXES EXCLUDED, SEE WATER STD. PLANS.

SPECIAL PROVISIONS:

1. CONCRETE SIDEWALK SHALL BE PER STD. PLANS 101-104 & SHALL BE SAW CUT PERPENDICULAR TO CURB FACE & REMOVED PENDING DISCRETION OF THE CITY INSPECTOR.

GENERAL NOTES:

1. UTILITY BOX PLACEMENT SHALL BE 1' MINIMUM FROM THE SCORE OR JOINT, OR CENTERED WITHIN THE PANEL.
2. THE LIMITS OF SIDEWALK REMOVAL IS TO THE DISCRETION OF THE CITY INSPECTOR.

APPROVED:

CITY ENGINEER

REVISION DATE: May 2008

CITY OF HUNTINGTON BEACH

DEPARTMENT OF PUBLIC WORKS

PARKWAY REPAIR FOR UTILITY BOX INSTALLATION

STANDARD PLAN 217

1 of 1

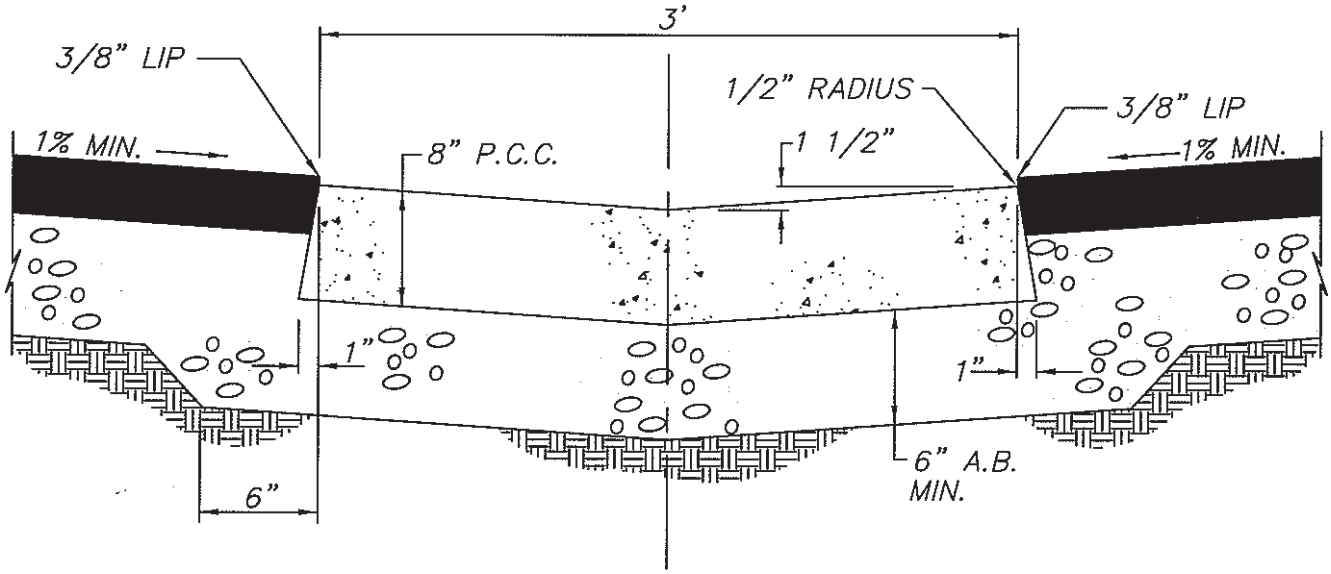

SECTION

GENERAL NOTES:

1. *WEAKENED PLANE OR QUICK JOINT, 20' O.C. MINIMUM.*
2. *DRIVE OR PARKING PAVEMENT SECTION SHALL BE AS DETERMINED BY SOIL REPORT.*

APPROVED:

CITY ENGINEER

REVISION DATE: May 2008

CITY OF HUNTINGTON BEACH

DEPARTMENT OF PUBLIC WORKS

3' LONGITUDINAL GUTTER

STANDARD PLAN

218

1 of 1

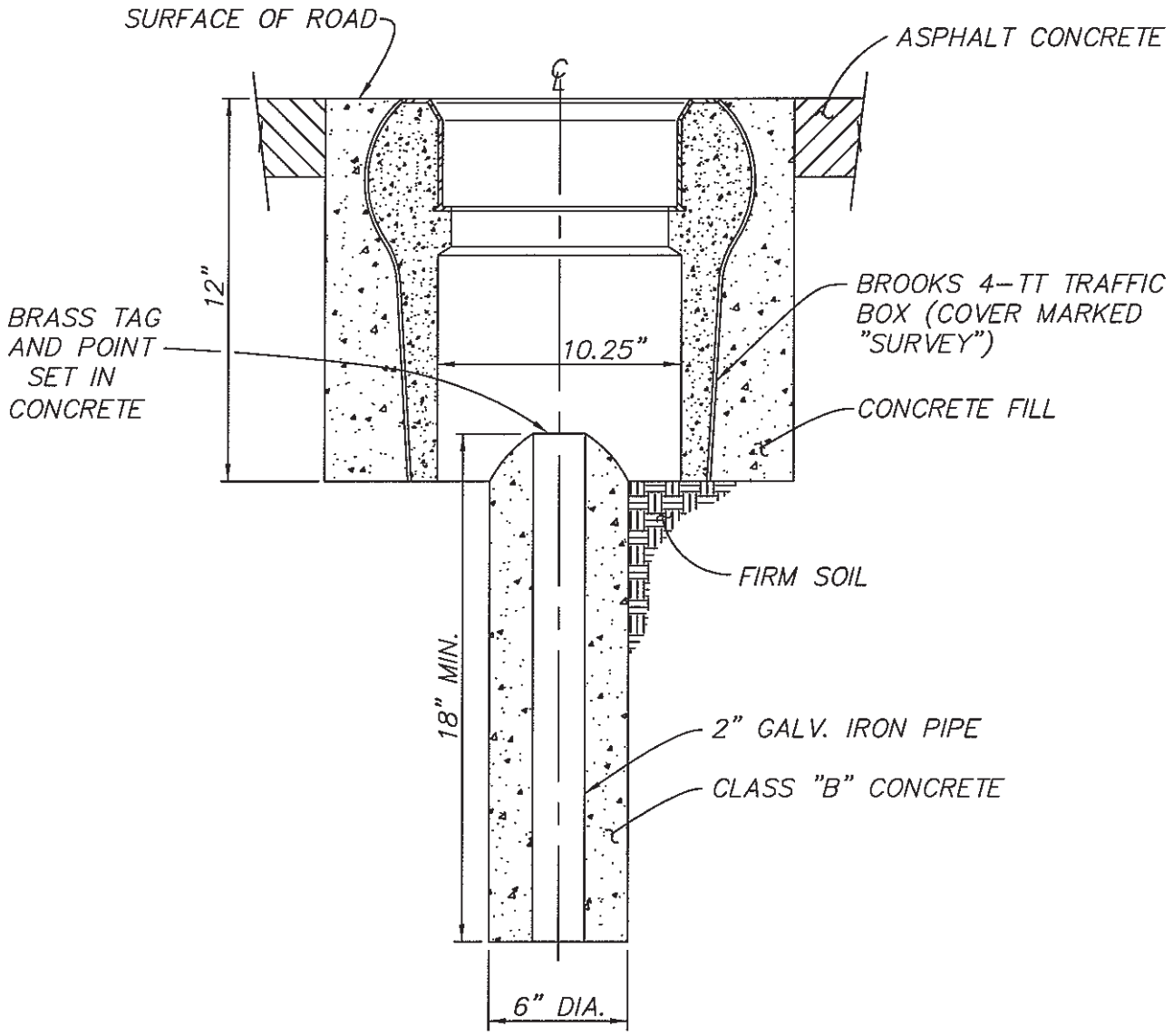

GENERAL NOTES:

1. THE CITY OF HUNTINGTON BEACH DEPARTMENT OF PUBLIC WORKS SHALL CHECK ALL POINTS PRIOR TO ACCEPTING THE FINAL LOCATION OF THE MONUMENT WELL. ALL COMPLETED MONUMENTS MUST BE CHECKED PRIOR TO FINAL ACCEPTANCE.
2. THE SURVEY POINT LOCATION SHALL BE REFERENCED BY 4 – 2' TIES IN ADDTION TO ACCEPTABLE CURB TIES.
3. TO BE INSTALLED AT ALL STREET INTERSECTIONS, OTHER THAN TWO LOCAL STREETS (60' R/W OR LESS), AND AT ALL QUARTER QUARTER, QUARTER, AND SECTION CORNERS.

APPROVED:

CITY ENGINEER

REVISION DATE: March 21, 1994

CITY OF HUNTINGTON BEACH

DEPARTMENT OF PUBLIC WORKS

SURVEY MONUMENT

STANDARD PLAN 219

1 of 1

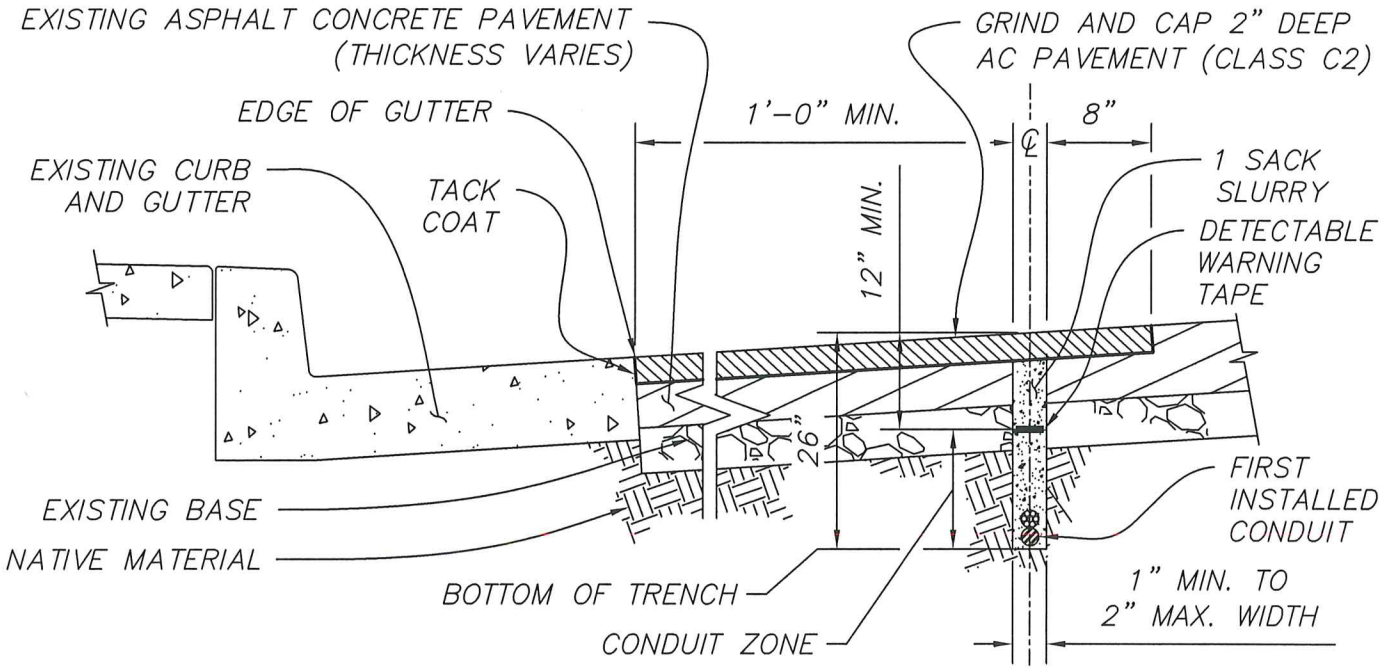

GENERAL NOTES:

1. ALL WORK SHALL BE CONSTRUCTED IN ACCORDANCE WITH THE LATEST STANDARD SPECIFICATIONS FOR PUBLIC WORKS CONSTRUCTION (SSPWC) "GREENBOOK".
2. MICRO-TRENCHING SHALL ONLY BE USED TO INSTALL TELECOMMUNICATION CONDUITS.
3. MICRO-TRENCHING SHALL NOT BE ALLOWED IN CONCRETE PAVED STREETS, NOR SIDEWALKS, PARKWAYS, CURBS, AND GUTTERS.
4. MICRO-TRENCHING SHALL BE LIMITED TO ONLY ONE (1) CUT PER SIDE OF STREET.
5. THE CONTRACTOR SHALL IDENTIFY ALL EXISTING UTILITIES, INCLUDING SERVICE CONNECTIONS IN THE FIELD. THE CONTRACTOR SHALL CONTACT UNDERGROUND SERVICE ALERT (U.S.A.) AT LEAST 48 HOURS PRIOR TO START OF WORK AT 8-1-1, OR TOLL FREE AT 1-800-422-4133. THE CONTRACTOR SHALL FURTHER SUPPLEMENT THE FINDINGS OF U.S.A. TO DETERMINE THE EXACT LOCATIONS AND DEPTHS OF ALL UTILITIES BY USING A MOBILE GROUND PENETRATING RADAR SYSTEM. THE CONTRACTOR SHALL POTHOLE ALL CROSSING UTILITIES AND PARALLEL UTILITIES WITHIN 18 INCHES OF THE PROPOSED ALIGNMENT TO A DEPTH OF 6 INCHES BELOW THE BOTTOM OF THE MICRO-TRENCH, TO DETERMINE THE EXISTING UTILITY ALIGNMENT AND ELEVATION. POTHOLES SHALL BE IMMEDIATELY BACKFILLED AND COMPACTED IN ACCORDANCE WITH THE SPECIFICATIONS OR RESTORED AS DIRECTED BY THE ENGINEER.
6. IF EXISTING UTILITIES ARE DAMAGED, THE CONTRACTOR SHALL IMMEDIATELY NOTIFY THE INSPECTOR, ENGINEER, AND UTILITY OWNER TO PERFORM THE REPAIRS PROMPTLY ACCORDING TO THEIR REQUIREMENTS AND PER ASSOCIATED CITY PERMITS.
7. PERMITTEE SHALL NOT MOVE, ALTER, TEMPORARILY RELOCATE OR INTERFERE WITH ANY EXISTING UTILITY STRUCTURE WITHOUT WRITTEN CONSENT OF THE UTILITY OWNER. IF IT BECOMES NECESSARY TO RELOCATE A UTILITY, THEN IT SHALL BE DONE BY ITS OWNER. THE COST OF MOVING UTILITIES SHALL BE BORNE BY THE PERMITTEE.

LIMITS OF REMOVALS, TRENCH WIDTH, AND LOCATION

8. THE MICRO-TRENCH SHALL BE CONSTRUCTED WITH CONTINUOUS UNIFORM STRAIGHT AND NEAT EDGES.
9. MICRO-TRENCH ALIGNMENTS SHALL CONSIST OF RUNS PARALLEL TO THE CENTERLINE OF THE STREET. STREET CROSSING MAY BE DONE PROVIDED THE ALIGNMENT IS PERPENDICULAR TO THE STREET CENTERLINE TO THE EXTENT POSSIBLE.

APPROVED: CITY ENGINEER REVISION DATE: MARCH 2022	CITY OF HUNTINGTON BEACH DEPARTMENT OF PUBLIC WORKS MICRO-TRENCHING	STANDARD PLAN 220 1 of 2

10. THE EDGE OF THE MICRO-TRENCH SHALL BE A MINIMUM OF 12-INCHES FROM THE EXISTING EDGE OF GUTTER, EXISTING CONCRETE STRUCTURE OR CURB IF GUTTER IS NOT PRESENT.
11. THE MICRO-TRENCH WIDTH SHALL BE A MINIMUM OF 1 INCH AND A MAXIMUM OF 2 INCHES.
12. MICRO-TRENCHING MAY BE PERMITTED UPON THE ENGINEER'S DISCRETION ON SPECIAL PAVEMENTS SUCH AS DECORATIVE ASPHALT PAVING. SPECIAL PAVEMENTS AND EXISTING IMPROVEMENTS SHALL BE RESTORED IN KIND AS APPROVED BY THE ENGINEER. HOWEVER, MICRO-TRENCHING THROUGH EXISTING CURB, GUTTER, CROSS GUTTER, BUS PAD, SIDEWALK, FLOATING CURB EXTENSION, BUS BULB, TRUCK PILLOW, RAISED CROSSWALK, ISLAND, MINI-ROUNDABOUT, OR SIMILAR ELEMENTS IS NOT PERMITTED.
13. UP TO TWO (2) VERTICALLY STACKED CONDUITS CAN BE PLACED WITHIN A MICRO-TRENCH.
14. THE CONDUIT SHALL BE INSTALLED AT THE BOTTOM OF THE MICRO-TRENCH. THE BOTTOM OF THE MICRO-TRENCH SHALL BE AT A DEPTH OF 26 INCHES BELOW THE EXISTING AC PAVEMENT SURFACE UNLESS THERE ARE CONFLICTS WITH EXISTING UTILITIES. THE CITY ENGINEER OR INSPECTOR MUST APPROVE ANY TRENCH DEPTH LESS THAN 26 INCHES.
15. ANCHORS/SPACERS SHALL BE PLACED AT A MAXIMUM OF 10 FEET APART ALONG THE ALIGNMENT TO ENSURE THE CONDUIT DOES NOT RISE FROM THE BOTTOM OF THE MICRO-TRENCH AND DOES NOT TOUCH THE WALLS OF THE MICRO-TRENCH DURING INSTALLATION.

BACKFILL

16. ALL MICRO-TRENCHES SHALL BE THOROUGHLY CONSOLIDATED AND COMPLETELY BACKFILLED WITH A ONE-SACK SLURRY TO FINISH GRADE BY THE END OF THE WORK DAY.
17. DETECTABLE WARNING TAPE SHALL BE REQUIRED OVER ALL MICRO-TRENCHED UTILITIES AND SHALL BE LOCATED 12-INCHES BELOW FINISHED GRADE.

GRIND AND RESURFACE SECTION

18. COMMENCEMENT OF SURFACE PREPARATION SUCH AS GRINDING/CHIPPING FOR ASPHALT CONCRETE PAVING REPLACEMENT WILL OCCUR NO SOONER THAN 48 HOURS AFTER SLURRY BACKFILL OF TRENCH. FIELD CONDITIONS OR MATERIAL USED MAY NECESSITATE A LONGER WAIT AS DETERMINED BY THE INSPECTOR.
19. AS SOON AS BACKFILL HAS CURED, NOT TO EXCEED 30 CALENDAR DAYS, ASPHALT CONCRETE SHALL BE GROUND AND CAPPED AS FOLLOWS:
    A. EXISTING AC AND SLURRY BACKFILL SHALL BE GROUND DOWN 2 INCHES AND RESURFACED WITH CLASS C2 ASPHALT.
    B. TACK COAT ALL EDGES WITH EITHER SS-1H EMULSIFIED ASPHALT OR PG64-10 PAVING ASPHALT IMMEDIATELY BEFORE ASPHALT CONCRETE IS PLACED.
    C. WHERE ANGULAR CROSSING OR ANY LENGTH-WISE CUTS OF A BIKE LANE OCCUR BY MICRO-TRENCHING, THE CAPPING LIMITS SHALL EXTEND THE FULL WIDTH OF THE BIKE LANE. PERPENDICULAR CROSSINGS MAY RECEIVE TYPICAL CAPPING WIDTH OF 18-INCHES. PAVEMENT MARKINGS AND TRAFFIC LOOPS DISTURBED BY MICRO-TRENCHING SHALL BE RESTORED IN KIND.
    D. PAVEMENT SHALL BE LEVEL WITH ADJACENT ROADWAY ELEVATIONS AND SHALL PROVIDE A SMOOTH SURFACE PER GREENBOOK SECTION 302-5 AND SUBJECT TO ACCEPTANCE BY THE INSPECTOR.

VAULTS AND SERVICE CONNECTIONS

20. CONNECTION TO SERVICE LATERALS, JUNCTION BOXES, ETC., SHALL BE DONE SUCH THAT CURB AND GUTTER IS NOT DISTURBED, SETTLED, OR DAMAGED. REMOVAL LIMITS OF SIDEWALK SHALL FOLLOW APPLICABLE STANDARDS AND REQUIREMENTS AS APPROVED BY THE ENGINEER. REFER TO STANDARD PLAN NO. 217.
21. THE USE OF HYDRO-JETTING IS NOT PERMITTED. TRENCHLESS METHODS SHALL NOT CREATE A VOID TWO TIMES GREATER THAN CONDUIT. VOID SHALL BE COMPACTED AND BACKFILLED WITH APPROVED CONTROLLED LOW-SRENGTH MATERIAL (CLSM).

SECTION

300

STORM DRAIN DESIGN

A. HYDROLOGY & HYDRAULIC CALCULATION SHALL BE SUBMITTED PER COUNTY OF ORANGE R.D.M.D. DESIGN MANUALS, CURRENT EDITION.

B. ALL BUILDINGS SHALL BE PROTECTED FROM FLOODING DURING 100-YEAR FREQUENCY STORM. THE MINIMUM FINISH FLOOR ELEVATION SHALL BE 1' ABOVE 100 YEAR FLOOD LEVEL. CATCH BASINS AND LATERALS SHALL BE DESIGNED TO CONTAIN 10-YEAR FLOWS WITHIN STREET CURBS AND 100 YEAR FLOWS WITHIN STREET RIGHT-OF-WAY.

C. 1. VELOCITY SHOULD NOT EXCEED 20 FPS IN STANDARD WALL R.C.P.

2. WHERE VELOCITY EXCEEDS 20 FPS, A SPECIAL WALL R.C.P. WITH A MINIMUM OF 1-1/2" STEEL CLEARANCE ON BOTH THE INSIDE AND OUTSIDE SURFACES SHALL BE USED.

3. MAXIMUM VELOCITY IN SPECIAL COVER R.C.P. SHALL BE 45 FPS.

D. ON ARTERIAL HIGHWAYS, ONE 12' LANE IN EACH DIRECTION SHOULD BE CLEAR OF WATER DURING A 100 YEAR STORM.

E. MANHOLE SPACING = 350' MAX.

F. ONCE WATER IS PICKED UP IN A STORM DRAIN, IT SHOULD REMAIN IN THE SYSTEM.

G. PIPE SIZE MAY NOT BE DECREASED DOWNSTREAM WITHOUT THE CITY'S APPROVAL.

H. BRANCHING OF FLOW IS NOT ALLOWED.

I. SUBMIT CALCULATIONS BASED ON ENERGY GRADE LINE. PLOT HYDRAULIC GRADE LINE AND PROVIDE HYDRAULIC DATA ON PLAN.

J. THE RATIO OF NORMAL VELOCITY TO CRITICAL VELOCITY SHOULD BE LESS THAN 0.9 OR GREATER THAN 1.2.

K. ALL STORM DRAINS SHALL BE CLOSED CIRCUIT TELEVISION INSPECTED (C.C.T.V.I.) WITHIN 1 HOUR AFTER CLEAR WATER FLUSHING SAID FACILITY, AND A VIDEO RECORD SHALL BE SUBMITTED TO THE PUBLIC WORKS INSPECTOR.

APPROVED:

CITY ENGINEER

REVISION DATE: MAY 2008

CITY OF HUNTINGTON BEACH

DEPARTMENT OF PUBLIC WORKS

STORM DRAIN DESIGN CRITERIA

STANDARD PLAN 300

L. STORM DRAIN EASEMENTS SHALL ADHERE TO THE FOLLOWING CONDITIONS:

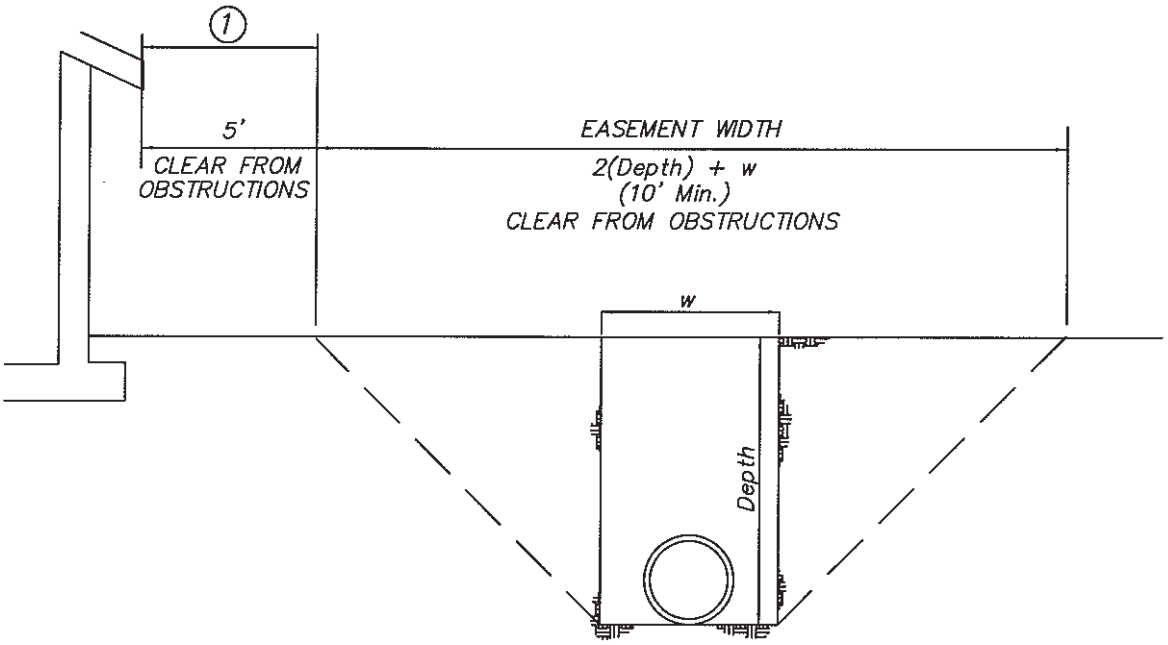

GENERAL NOTES:

1. WHERE APPLICABLE, PERMANENT EASEMENTS SHALL BE DEDICATED ON THE FINAL SUBDIVISION MAP TO THE CITY OF HUNTINGTON BEACH.
2. STORM DRAIN SHALL BE LOCATED AT THE CENTER LINE OF EASEMENTS.
3. EASEMENT SHALL BE EXCLUSIVELY FOR STORM DRAIN PURPOSES.
4. SURFACE AREA WITHIN EASEMENT SHALL BE PAVEMENT OR GROUND COVER UNLESS OTHERWISE APPROVED BY THE CITY ENGINEER.

NOTE:

(1) STORM DRAIN EASEMENT SHALL BE LOCATED ENTIRELY ON ONE LOT. BUILDING SET BACKS SHALL BE MINIMUM 5' FROM EASEMENT EDGES.

APPROVED:

CITY ENGINEER

REVISION DATE: May 2008

CITY OF HUNTINGTON BEACH

DEPARTMENT OF PUBLIC WORKS

STORM DRAIN DESIGN CRITERIA

STANDARD PLAN 300

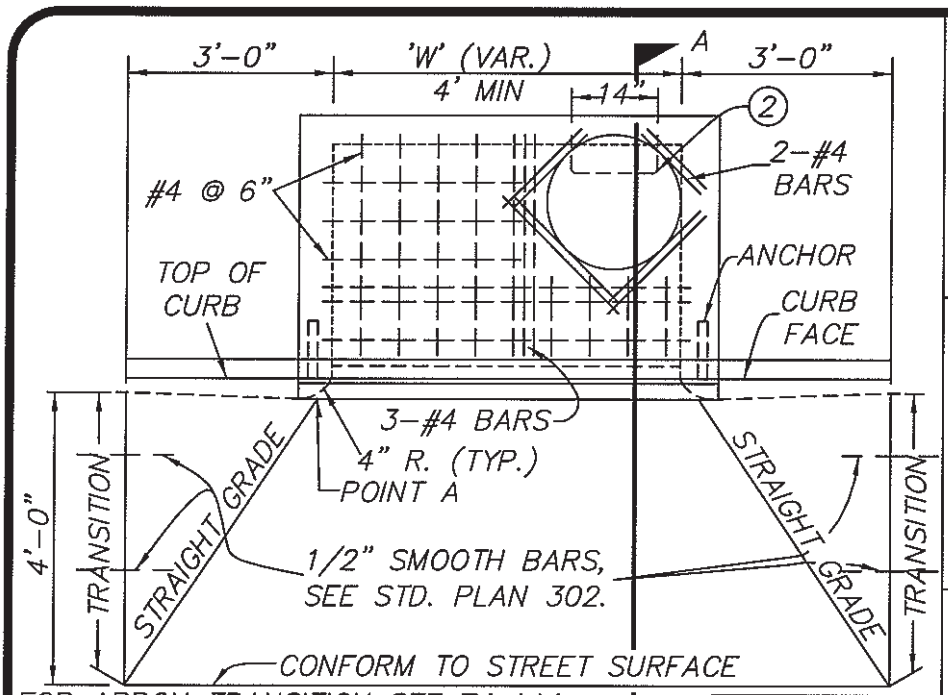

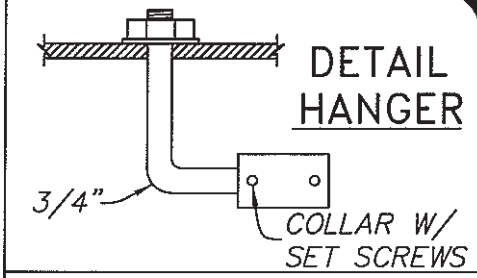

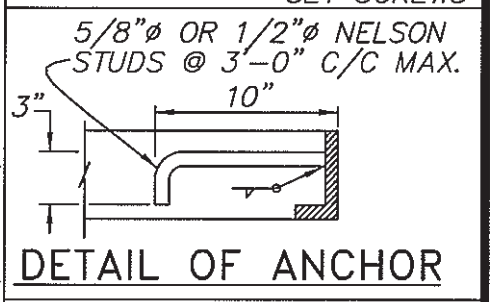

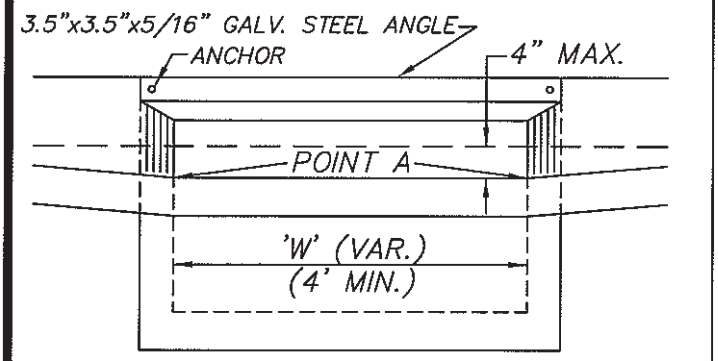

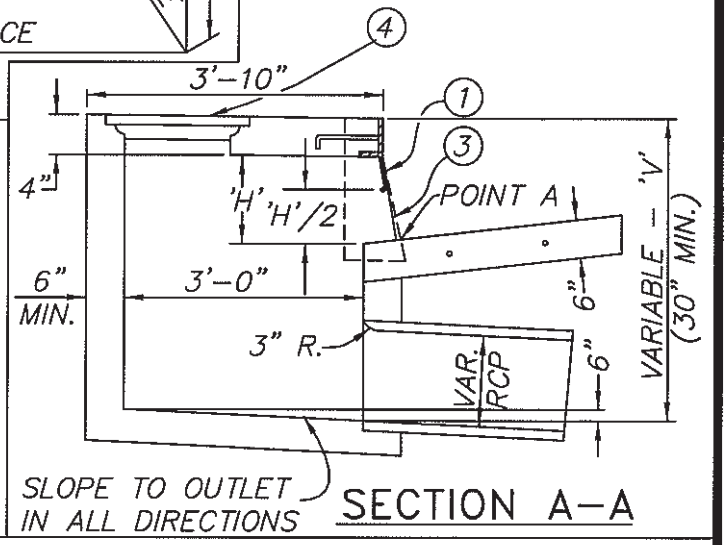

NOTES:

1. PROVIDE 3/4" GALVANIZED HORIZONTAL PROTECTION BARS, ON HANGING TYPE END ANCHOR (ALHAMBRA A-1570 OR APPROVED EQUAL) 'H'/2 = 5" MAX.
2. 3/4" ROUND GAL. STL. STEPS WHEN 'V' IS GREATER THAN 3'-0" PROVIDE SPACING 12" FROM TOP OF BASIN AND 16" CENTER TO CENTER.
3. PROVIDE 1" DIA. GALVANIZED VERTICAL ROD AT 7'-0" CENTER TO CENTER (MAX., WHERE REQUIRED WITH ADJUSTABLE G.I. PROTECTION BAR STIRRUP.)
4. FRAME & COVER, ALHAMBRA A-1530-B OR APPROVED EQUAL, GALVANIZED & MARKED "SD". SEE STD. PLAN 303.

APPROVED:

CITY ENGINEER

REVISION DATE: May 2008

CITY OF HUNTINGTON BEACH

DEPARTMENT OF PUBLIC WORKS

CURB INLET CATCH BASIN AND LOCAL DEPRESSION

STANDARD PLAN 301

1 of 2

GENERAL NOTES:

1. SEE STD. PLAN 309 FOR WALL & FLOOR REINFORCEMENT & WALL THICKNESS.
2. OUTLET MAY BE MADE IN ANY DIRECTION.
3. ALL EXPOSED CONCRETE SURFACE SHALL CONFORM IN GRADE, FINISH & COLOR TO ALL ADJOINING CURB & WALK.
4. PIPE INLETS & OUTLETS SHALL BE AT BOTTOM OF BASIN UNLESS OTHERWISE SPECIFIED.
5. CURB OPENING CATCH BASIN WITH GRATING MAY BE CONSTRUCTED IN LIEU OF CURB OPENING ONLY.
   A. CONSTRUCT PER A.P.W.A. STD. 301-2.
   B. FRAME AS SHOWN ON A.P.W.A. STD. 311-2 SHALL BE MODIFIED TO INCREASE HEIGHT OF ANGLE IRON ADJACENT TO CURB, FROM 4" TO 5.5".

APPROVED:

CITY ENGINEER

REVISION DATE: May 2008

CITY OF HUNTINGTON BEACH

DEPARTMENT OF PUBLIC WORKS

CURB INLET CATCH BASIN AND LOCAL DEPRESSION

STANDARD PLAN 301

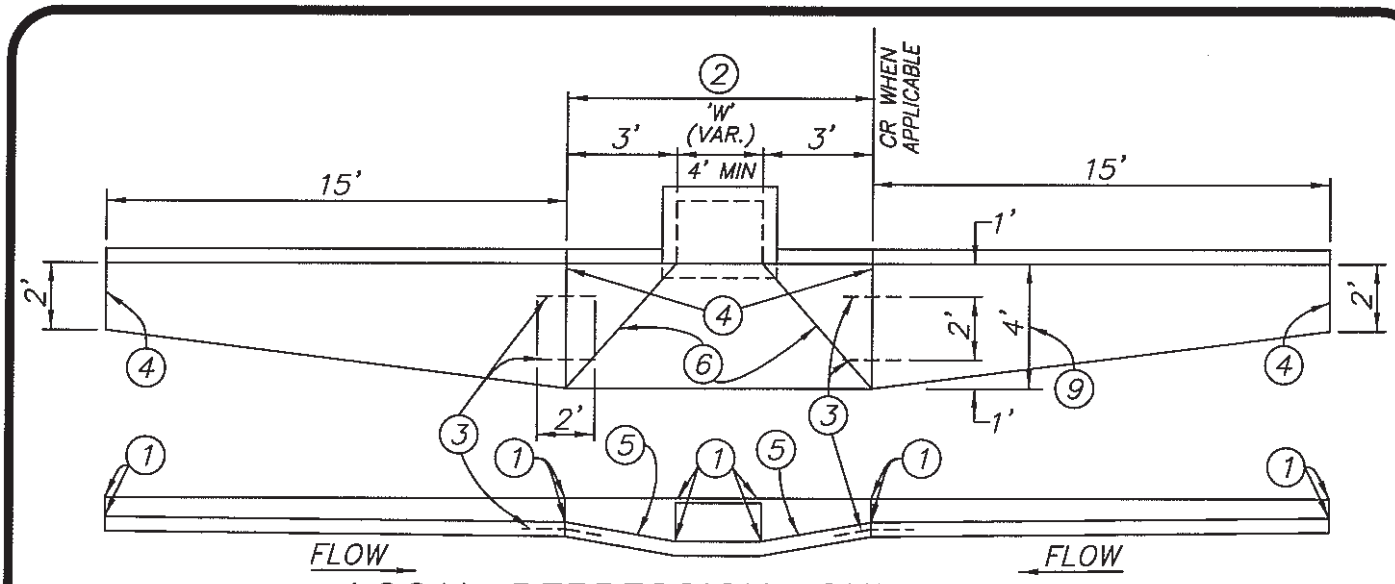

LOCAL DEPRESSION, SUMP COND.

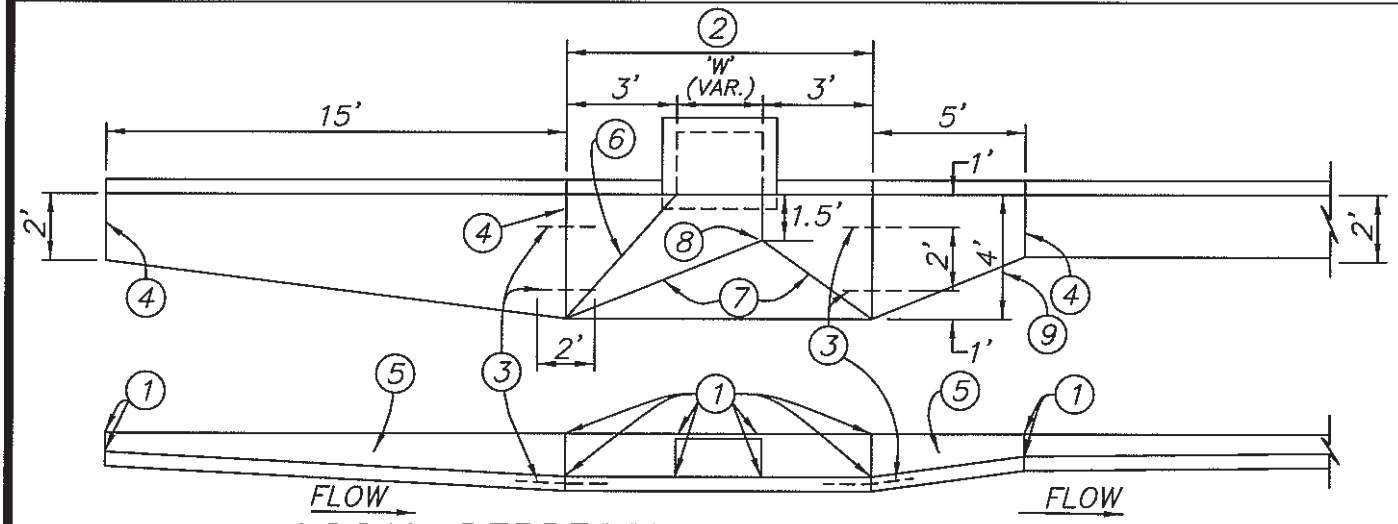

LOCAL DEPRESSION, INTERCEPT COND.

(FLOW–BY)

NOTES:

1. INDICATE TOP OF CURB AND FLOW LINE ELEVATIONS ON PLANS.
2. SEE STD. PLAN 301 FOR CATCH BASIN DETAILS.
3. INSTALL 2 – 1/2" DIA. SMOOTH BARS, 2' LONG, PER TYPICAL DIMENSIONS ABOVE.
4. PROVIDE WEAKENED PLANE OR QUICK JOINT.
5. CURB HEIGHT VARIES.
6. STRAIGHT GRADE FLOW LINE.
7. STRAIGHT GRADE RIDGE.
8. ELEVATION = FL ELEVATION + 2".
9. REDUCE TO 2' UPON APPROVAL OF THE CITY ENGINEER WHERE BIKE LANES ARE PRESENT.

APPROVED:

CITY ENGINEER

REVISION DATE: May 2008

CITY OF HUNTINGTON BEACH

DEPARTMENT OF PUBLIC WORKS

APRON TRANSITION – CATCH BASIN

STANDARD PLAN 302

1 of 1

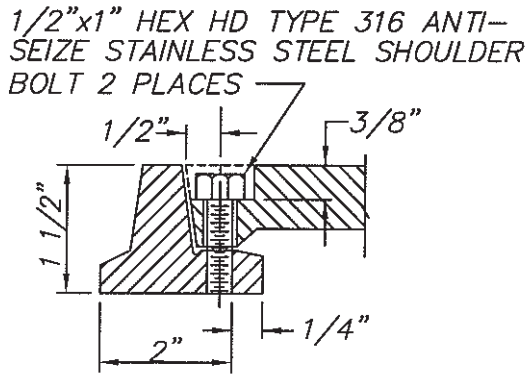

CATCH BASIN LOCKING DETAIL
(REQUIRED ON PRESSURE MANHOLES)

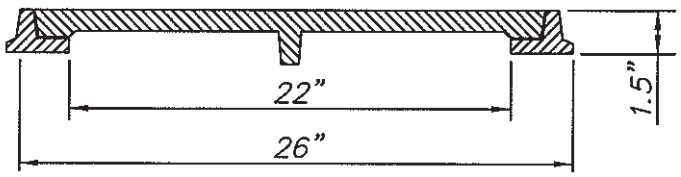

SECTION A–A

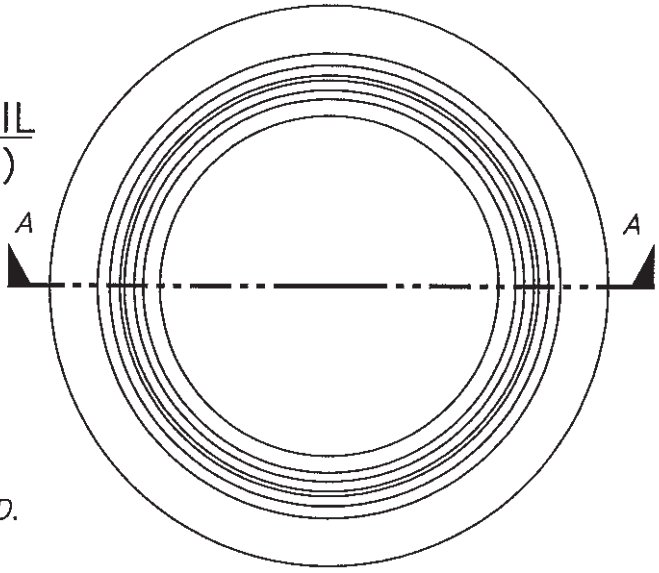

PLAN OF FRAME

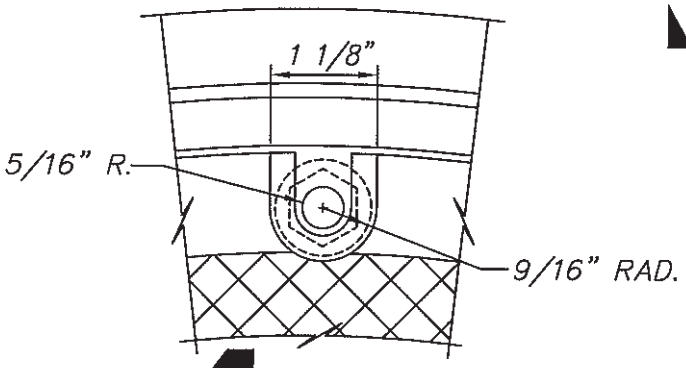

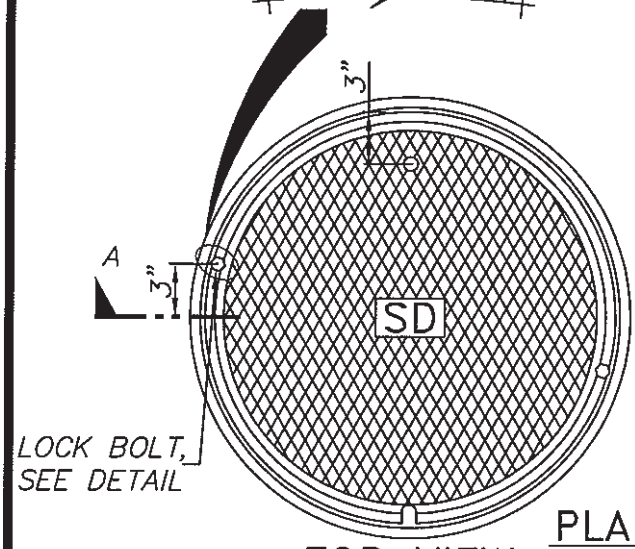

TOP VIEW

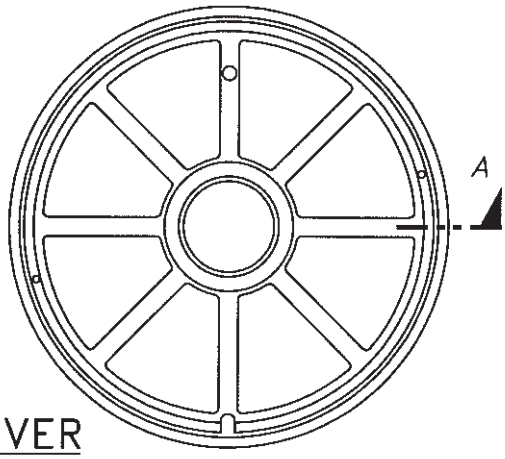

BOTTOM VIEW

PLAN OF COVER

GENERAL NOTES:

1. FRAME & COVER SHALL BE A GOOD FIT & NOT RATTLE.
2. FRAME & COVER SHALL BE ALHAMBRA A–1530–B OR APPROVED EQUAL. WEIGHT 130 LBS.
3. FRAME AND COVER SHALL BE GALVANIZED.

APPROVED:

CITY ENGINEER

REVISION DATE: May 2008

CITY OF HUNTINGTON BEACH

DEPARTMENT OF PUBLIC WORKS

CATCH BASIN
FRAME AND COVER

STANDARD PLAN
303
1 of 1

TABLE "A"

'D' PIPE DIA.	'F'
60" OR LESS	9"
63" TO 69"	10.5"
72" TO 78"	12"
84"	13"

REFER TO STD. PLAN 304, SHEET 2 of 2 FOR SECTIONS

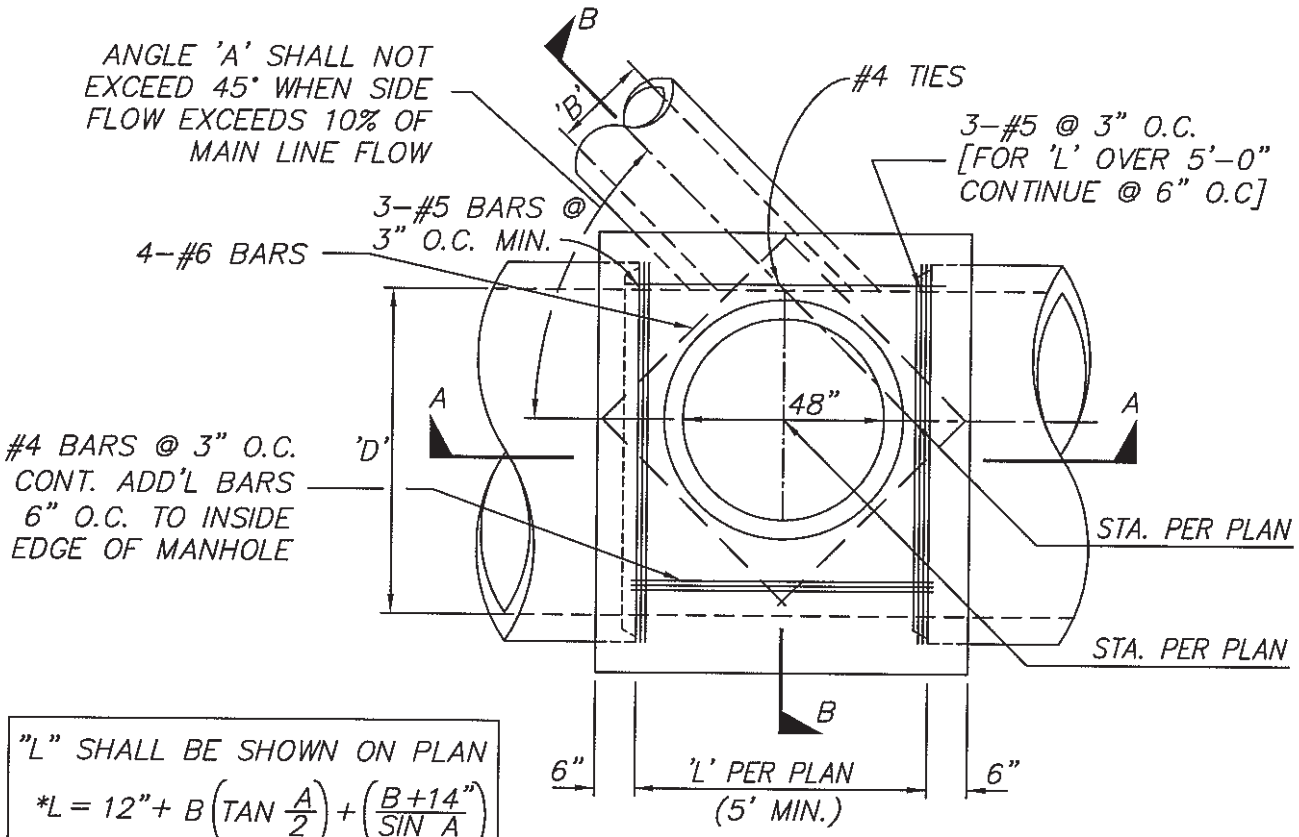

"L" SHALL BE SHOWN ON PLAN

$$*L = 12" + B\left(\text{TAN}\ \frac{A}{2}\right) + \left(\frac{B + 14"}{\text{SIN}\ A}\right)$$

*ROUND OFF TO THE NEXT HIGHER FOOT

PLAN

(SHAFT NOT SHOWN)

GENERAL NOTES:

1. THIS STRUCTURE MAY BE USED FOR MAINLINE PIPES UP TO 84" DIA. AND SIDE INLETS UP TO AN OUTSIDE DIA. OF NO MORE THAN 1/2 THE INSIDE DIA. OF THE AVERAGE OF THE MAIN LINE PIPES.
2. CONCRETE SHALL BE 560-C-3250. FOR REINFORCED CONC. MANHOLE SHAFT SEE STD. PLAN 306.
3. FOR MAINLINES SMALLER THAN 48" THE SHAFT SHALL BE CENTERED ON PIPE AXIS AND SHELVES CONSTRUCTED PER DETAIL ON STD. PLAN 304, SHT. 2 of 2.
4. DIMENSION 'F' SHALL BE BASED ON THE LARGEST MAIN LINE I.D. AS SHOWN ON TABLE "A".
5. OMIT CONE WHEN PIPE COVER IS LESS THAN 4'. USE FLAT TOP SECTION.

APPROVED:

CITY ENGINEER

REVISION DATE: MAY 2008

CITY OF HUNTINGTON BEACH

DEPARTMENT OF PUBLIC WORKS

JUNCTION STRUCTURE - TYPE "A"

STANDARD PLAN 304

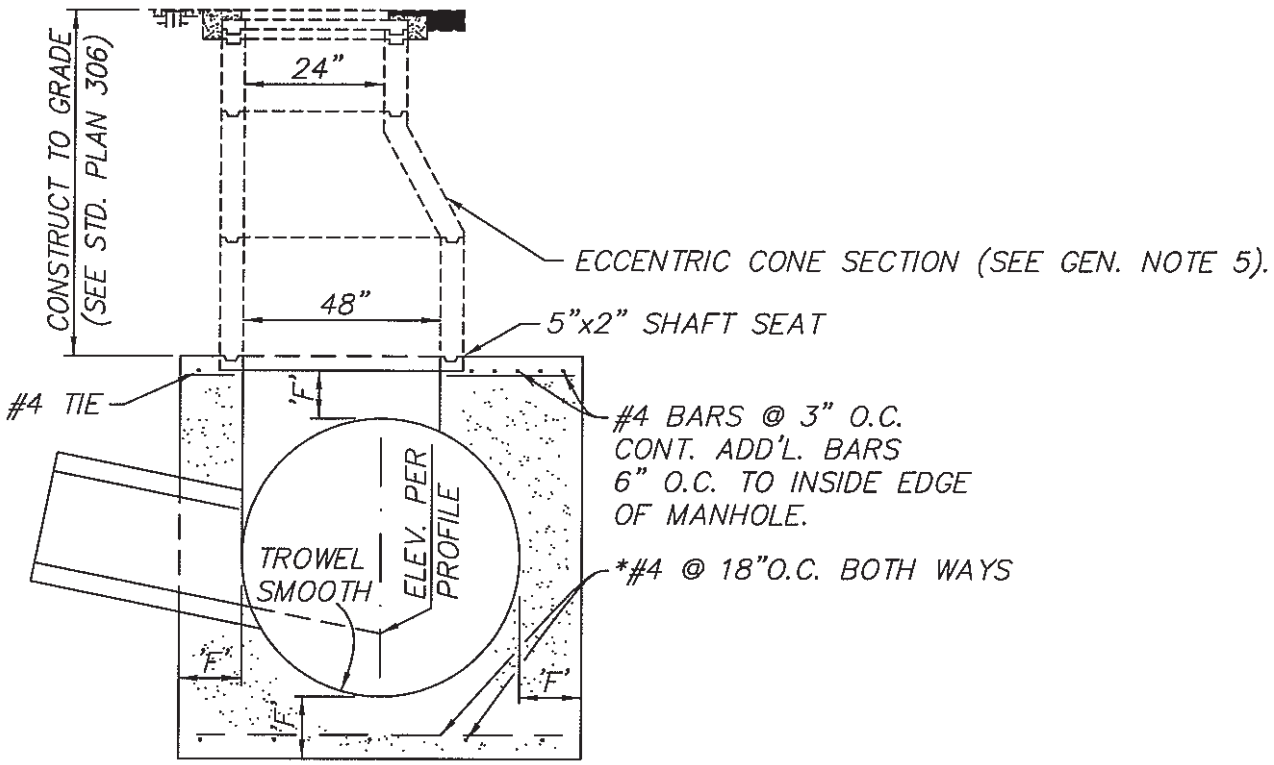

SECTION B–B

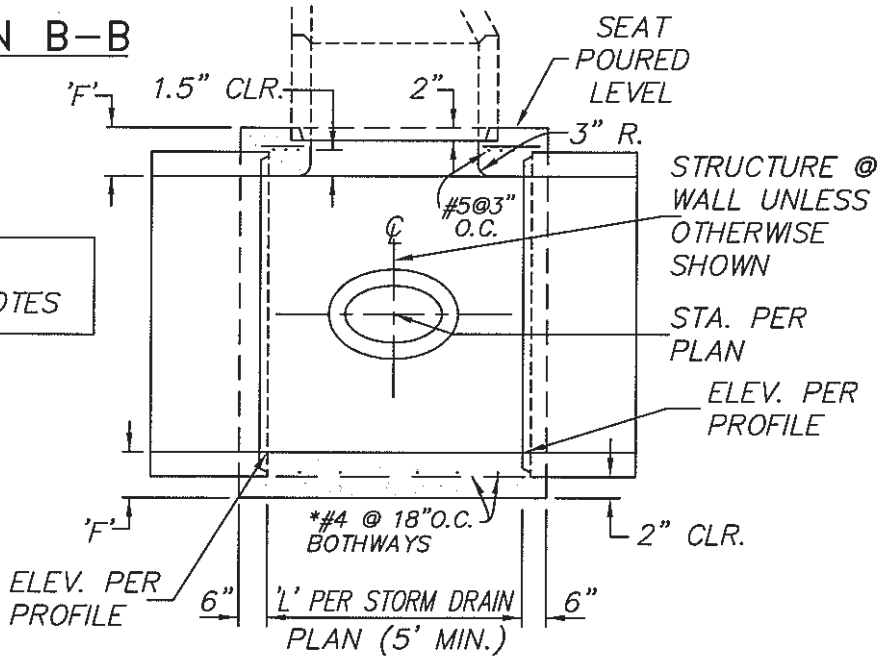

SECTION A–A

REFER TO STD. PLAN 304,
SHEET 1 of 2 FOR GENERAL NOTES

* MAY BE OMITTED FOR
R.C.P. 48" I.D. OR LESS.

APPROVED:

CITY ENGINEER

REVISION DATE: MAY 2008

CITY OF HUNTINGTON BEACH

DEPARTMENT OF PUBLIC WORKS

JUNCTION STRUCTURE – TYPE "A"

STANDARD PLAN
304
2 of 2

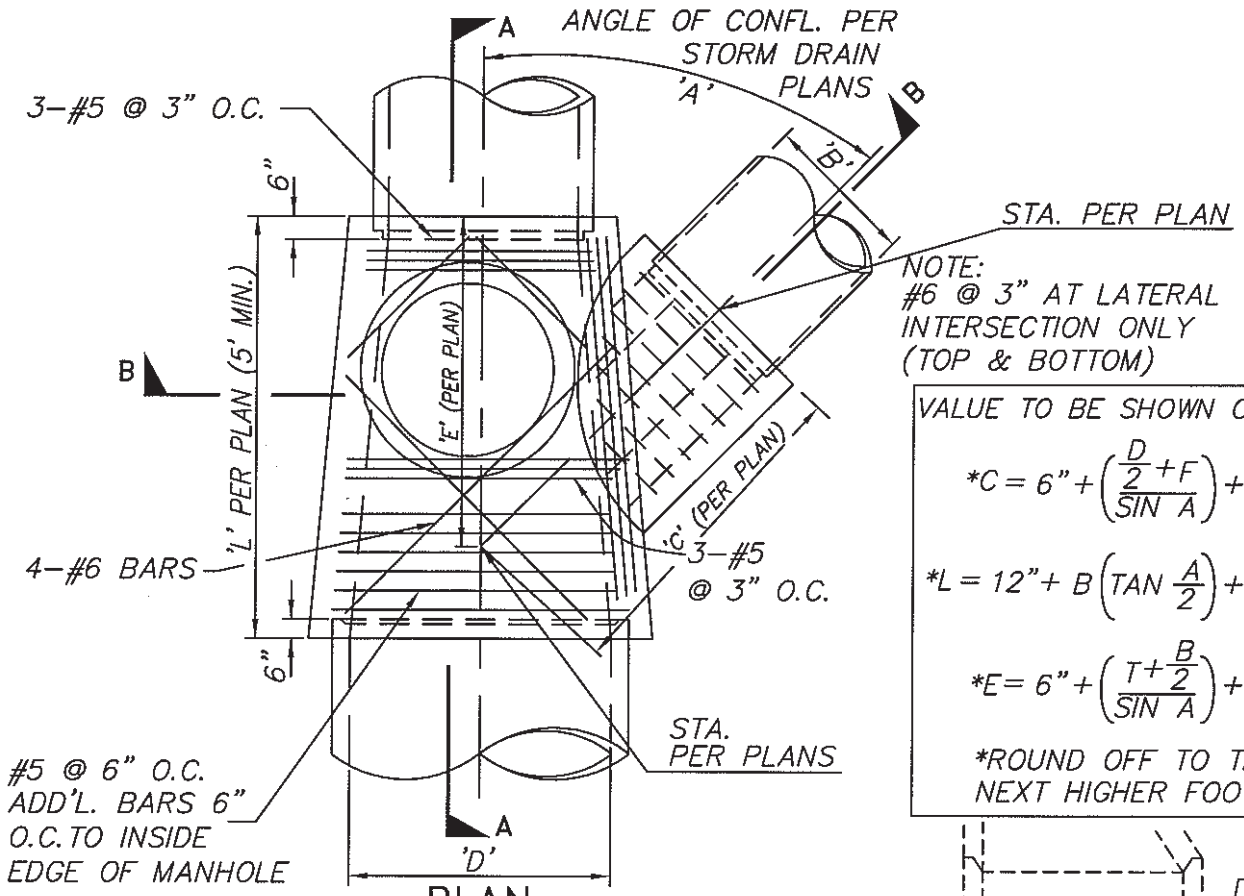

PLAN

VALUE TO BE SHOWN ON PLANS

$$*C = 6" + \left(\frac{\frac{D}{2}+F}{SIN\ A}\right) + \left(\frac{\frac{B}{2}+T}{TAN\ A}\right)$$

$$*L = 12" + B\left(TAN\ \frac{A}{2}\right) + \left(\frac{B+2T}{SIN\ A}\right)$$

$$*E = 6" + \left(\frac{T+\frac{B}{2}}{SIN\ A}\right) + \left(\frac{\frac{D}{2}+F}{TAN\ A}\right)$$

*ROUND OFF TO THE NEXT HIGHER FOOT

GENERAL NOTES:

1. THIS STRUCTURE MAYBE USED FOR MAINLINE PIPES UP TO 84" DIA. AND ONE SIDE INLET OF AN INSIDE DIA. UP TO THE AVERAGE INSIDE DIA. OF THE MAIN LINE.
2. CONCRETE SHALL BE 560–C–3250. FOR REINFORCED CONC. MANHOLE SHAFT SEE STD. PLAN 306.
3. FOR MAINLINES SMALLER THAN 48" THE SHAFT SHALL BE CENTERED ON PIPE AXIS AND SHELVES CONSTRUCTED PER DETAIL ON STD. PLAN 304, SHT. 2 of 2.
4. DIMENSIONS 'F' SHALL BE BASED ON THE LARGEST MAIN LINE I.D. AS SHOWN ON STD. PLAN 305, SHEET 2 of 2, TABLE "A".
5. DIMENSION 'T' SHALL BE BASED ON THE INSIDE DIA. OF THE LATERAL AS SHOWN ON STD. PLAN 305, SHEET 2 of 2, TABLE "B".

* MAY BE OMITTED FOR R.C.P. 48" I.D. OR LESS.

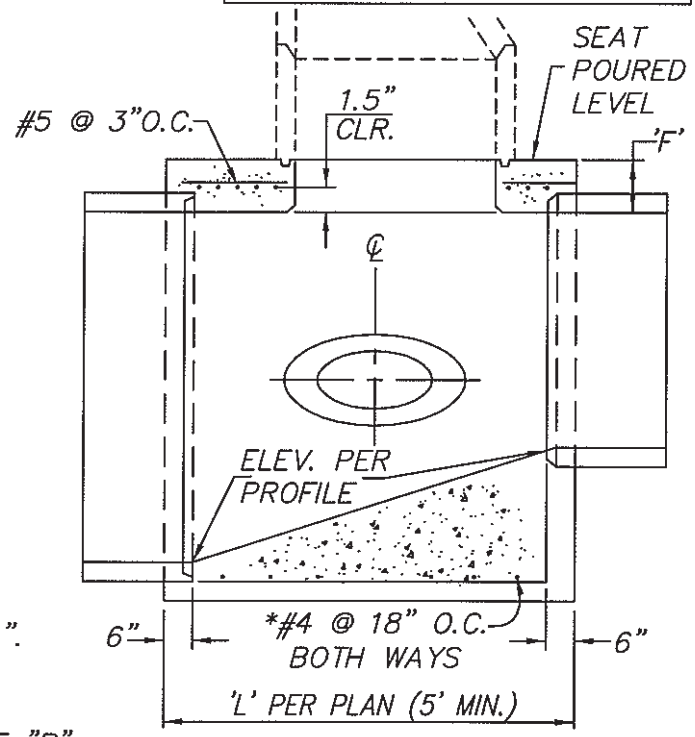

SECTION A–A

APPROVED:

CITY ENGINEER

REVISION DATE: May 2008

CITY OF HUNTINGTON BEACH

DEPARTMENT OF PUBLIC WORKS

JUNCTION STRUCTURE TYPE "B"

STANDARD PLAN 305

1 of 2

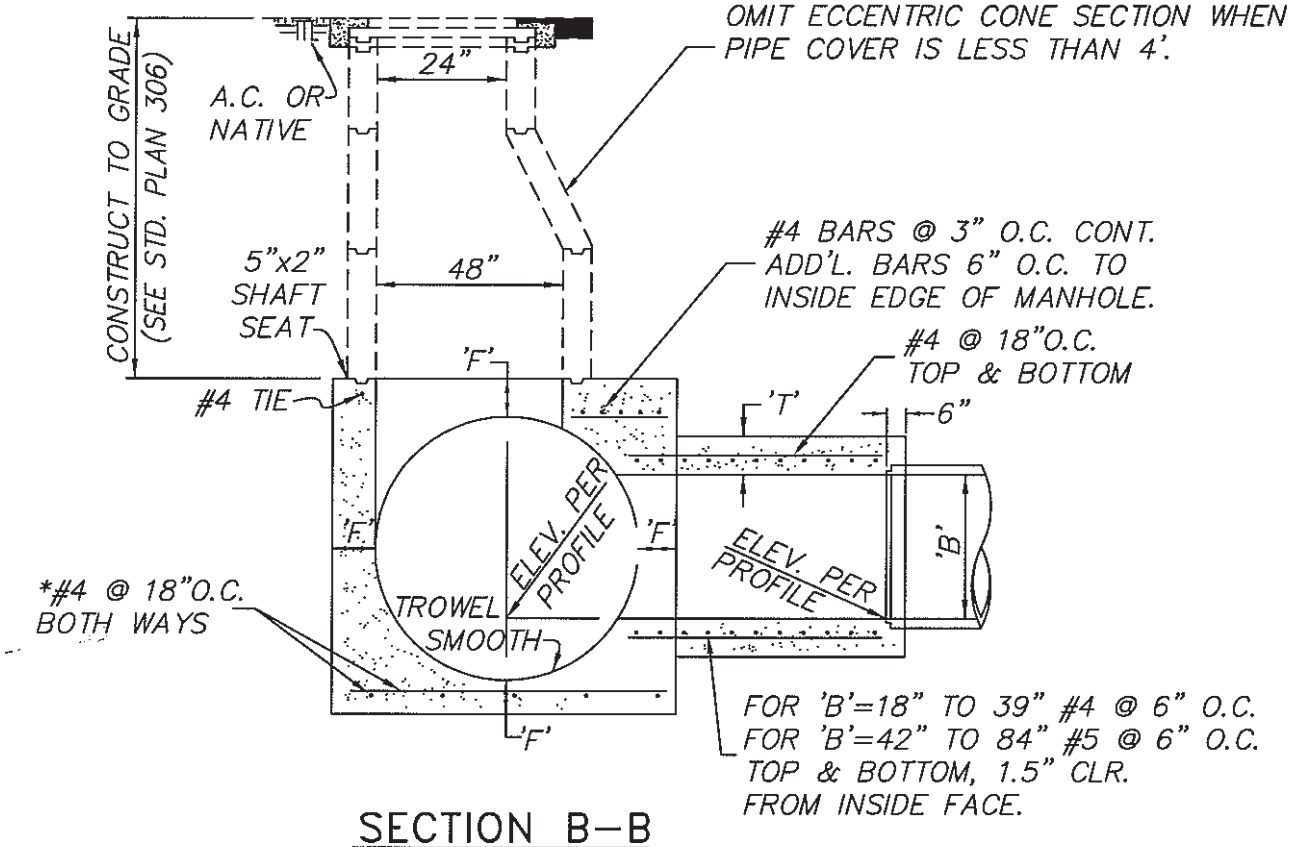

SECTION B–B

TABLE "A"

PIPE DIA.	'F'
60" OR LESS	9"
63" TO 69"	10.5"
72" TO 78"	12"
84"	13"

REFER TO STD. PLAN 305, SHEET 1 of 2 FOR GENERAL NOTES

TABLE "B"

LATERAL DIA. "B"	'T'
18" TO 21"	5"
24" TO 30"	6"
33" TO 39"	7"
42" TO 48"	8"
51" TO 54"	9"
57" TO 63"	10"
63" TO 72"	11"
75" TO 84"	12.5"

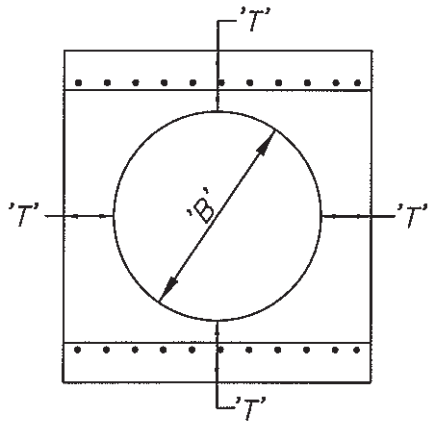

* MAY BE OMITTED FOR R.C.P. 48" I.D. OR LESS.

APPROVED:

CITY ENGINEER

REVISION DATE: MAY 2008

CITY OF HUNTINGTON BEACH

DEPARTMENT OF PUBLIC WORKS

JUNCTION STRUCTURE – TYPE "B"

STANDARD PLAN 305

2 of 2

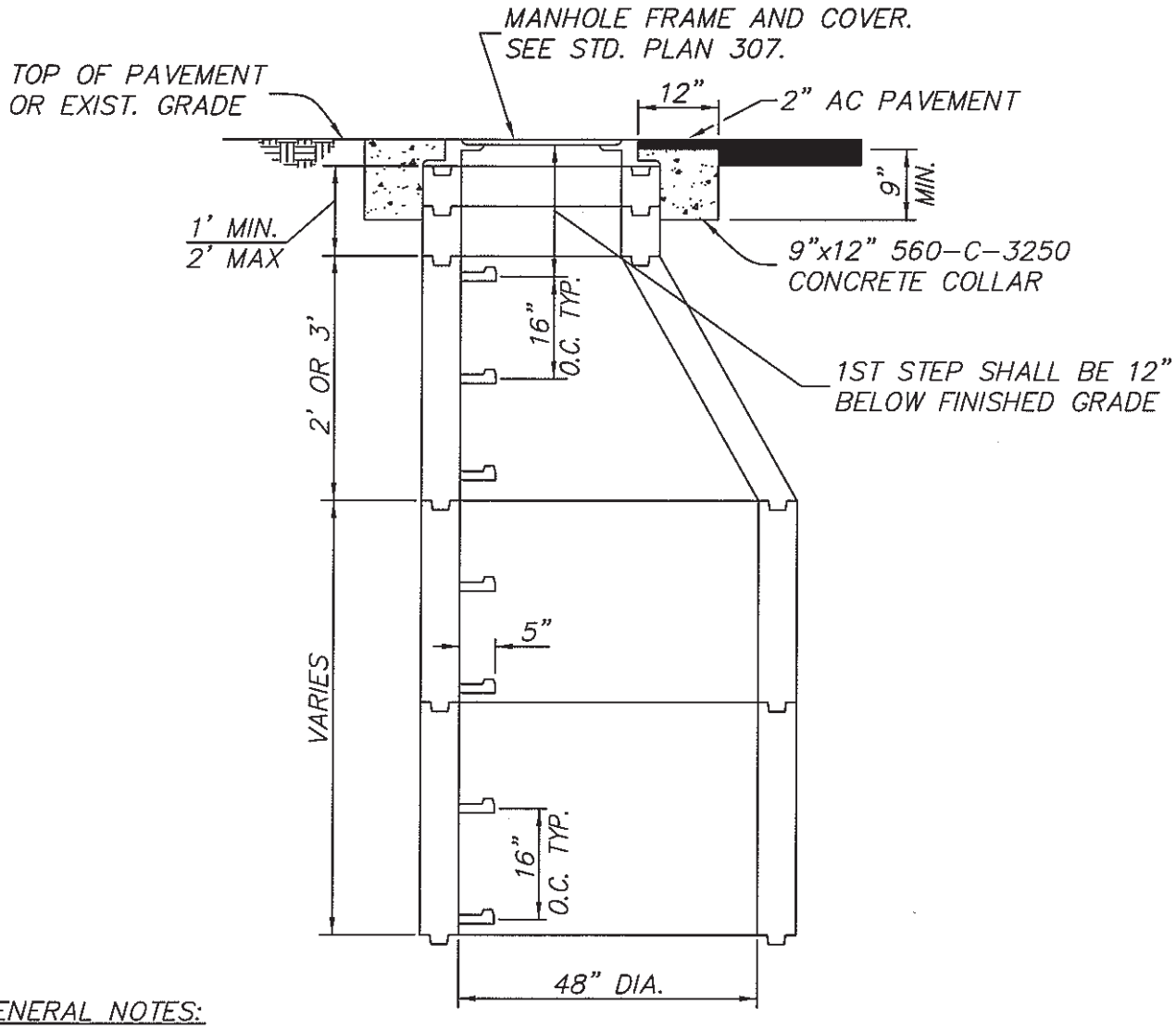

GENERAL NOTES:

1. APPROVED MANHOLE ADAPTORS REQ'D. FOR PLASTIC PIPE.
2. INSTALL MANHOLE WITH STRAIGHT SIDE DOWNSTREAM.
3. TYPE OF STEP-STEEL REINFORCED CO-POLYMER POLYPROPYLENE MANHOLE STEP TYPE PS2-PFS.
4. GROUT ALL JOINTS AND VOIDS SMOOTH AND WATER TIGHT, INSIDE AND OUT.
5. FORM KEY IN BASE AND SET M.H. IN GROUT AFTER BASE HAS SET (MIN. 24 HOURS).
6. ALL OPENINGS TO BE CONST. INTO EXISTING M.H. SHALL BE BY CORE DRILLING.
7. MANHOLE BASE SHALL BE POURED ON UNDISTURBED SOIL.
8. CONSTRUCTION SHALL BE IN ACCORDANCE WITH STANDARD SPECIFICATIONS.
9. THE MANHOLE PIPES AND GRADE RING SHALL BE ARRANGED IN ORDER OF LONGER TO SHORTER LENGTHS FROM BOTTOM TO TOP.
10. MANHOLE DETAILS SHALL BE SUBMITTED TO THE ENGINEER FOR APPROVAL.
11. MANHOLE SHALL MEET OR EXCEED THE REQUIREMENTS OF A.S.T.M. C-478 SPECIFICATIONS WHERE APPLICABLE.

APPROVED:

CITY ENGINEER

REVISION DATE: MAY 2008

CITY OF HUNTINGTON BEACH

DEPARTMENT OF PUBLIC WORKS

48" REINFORCED CONCRETE MANHOLE

STANDARD PLAN 306

1 of 1

NO.	'A'	'B'	'C'
A–1170	22.5"	33.5"	6"
A–1480	34.5"	43.5"	4.75"

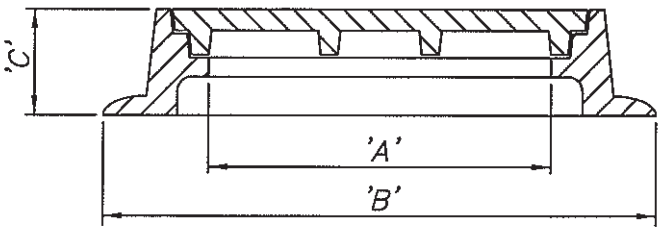

SECTION A–A

GENERAL NOTES:

1. 24" COVER & FRAME ALHAMBRA NO. A–1170 OR APPROVED EQUAL. WEIGHT 470 LBS.
2. 36" COVER & FRAME ALHAMBRA NO. A–1480 OR APPROVED EQUAL. WEIGHT 610 LBS.
3. FRAME & COVER SHALL BE A GOOD FIT & NOT RATTLE.

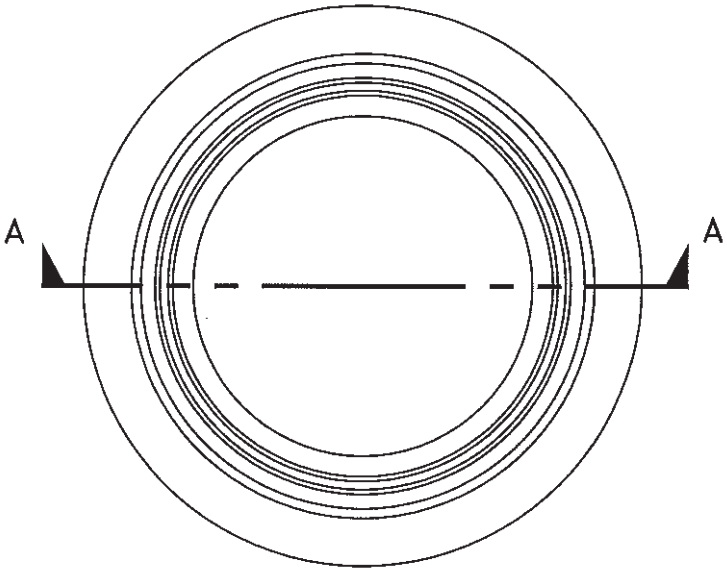

PLAN OF FRAME

NOTE: APPROVED EQUALS TO THE ALHAMBRA A–1170:
NORFOLK – NC–170
SOUTHBAY – SBF1170 OR A22
L.B. IRON – X–115A

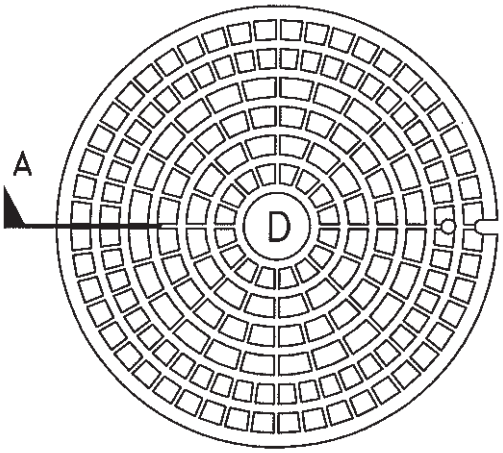

TOP VIEW

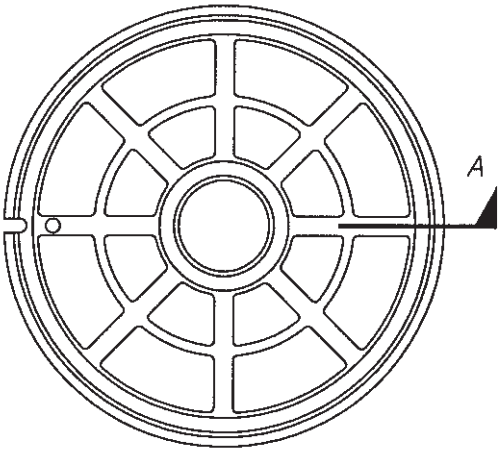

BOTTOM VIEW

PLAN OF COVER

APPROVED:

CITY ENGINEER

REVISION DATE: MAY 2008

CITY OF HUNTINGTON BEACH

DEPARTMENT OF PUBLIC WORKS

STANDARD STORM DRAIN MANHOLE COVER AND FRAME

STANDARD PLAN 307

1 of 1

BEDDING "A"
CRUSHED ROCK
GRADATION

SIEVE SIZE	% PASSING SIEVES
1"	100
3/4"	90–100
1/2"	30–60
3/8"	0–20
NO. 4	0–5

ASTM C131 TEST
GRADING–B

'W'=6" FOR 60" DIAMETER OR LESS
10" FOR 63" TO 108" DIAMETER
12" FOR 108" DIAMETER OR LARGER

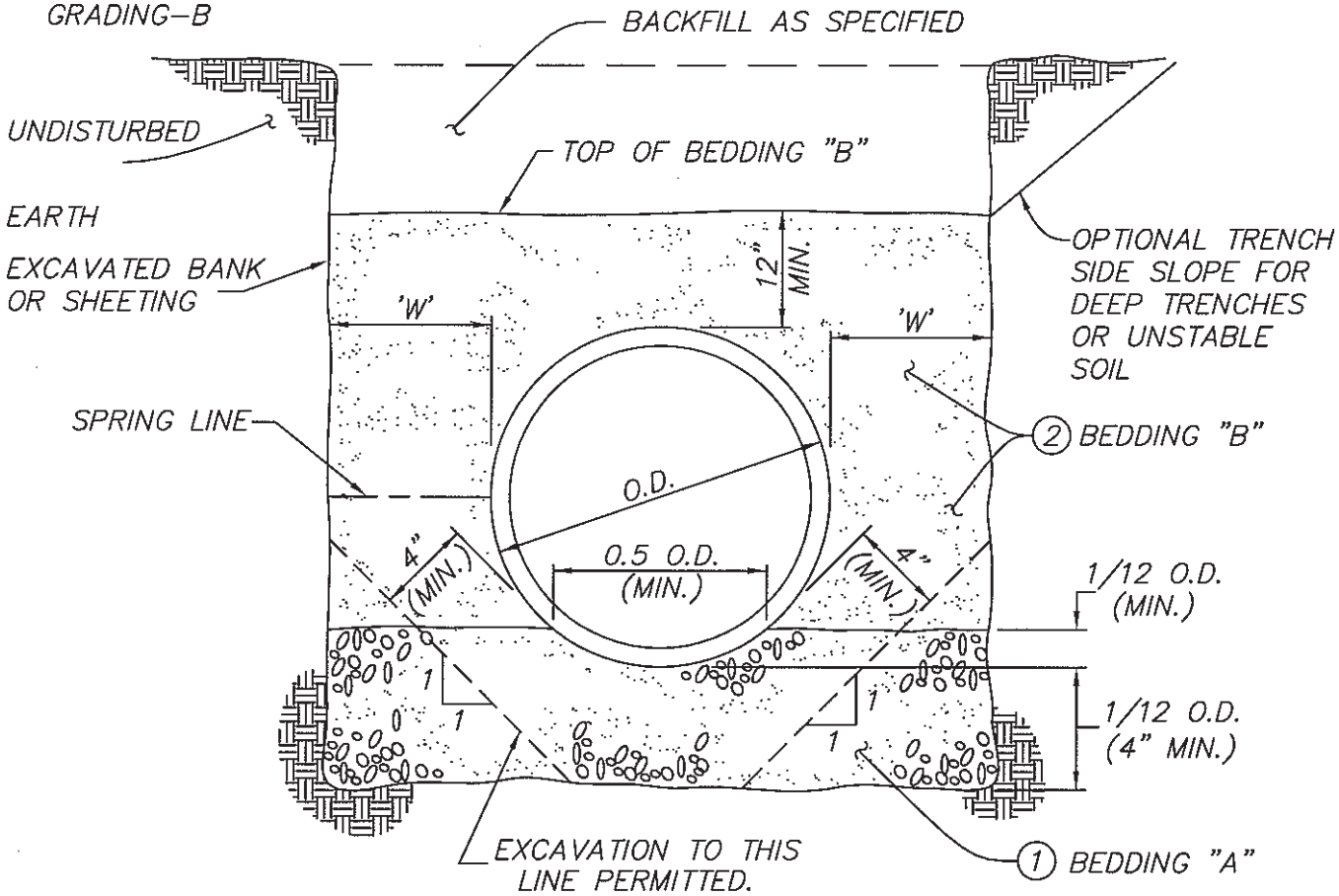

NOTES:

1. BEDDING "A" SHALL BE SAND (SAND EQUIVALENT NOT LESS THAN 30) OR CRUSHED ROCK PER GRADATION TABLE HEREON.
2. BEDDING "B" SHALL BE COMPOSED OF SAND OR OTHER GRANULAR MATERIAL (SAND EQUIVALENT OF NOT LESS THAN 30) AND SHALL BE COMPACTED TO A RELATIVE COMPACTION OF NOT LESS THAN 90% WITHIN 3' FROM FINISH SURFACE, AND 85% COMPACTION BELOW 3'.

APPROVED:

CITY ENGINEER

REVISION DATE: March 21, 1994

CITY OF HUNTINGTON BEACH

DEPARTMENT OF PUBLIC WORKS

REINFORCED CONCRETE
PIPE BEDDING DETAIL

STANDARD PLAN
308
1 of 1

GENERAL NOTES:

1. SEE STD. PLAN 309, SHEET 2 of 2, FOR ADDITIONAL GENERAL NOTES.
2. #4 BARS MAY BE USED IN LIEU OF #3 BARS PER STD. PLAN 309, SHEET 2 of 2, TABLE "A".

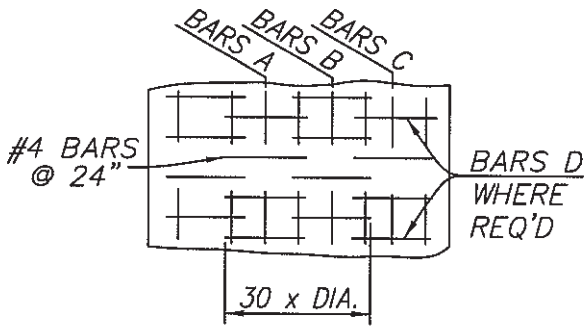

FLOOR REINFORCEMENT – SECTION 2

'W' OF C.B.	'V' (FT.) FROM	'V' (FT.) TO	'T' (IN)	FRONT WALL STEEL HORIZ.	FRONT WALL STEEL VERT.	REAR & END WALLS & FLOOR STEEL EACH WAY
7'	10'	12'	10"	#4 @ 10"	#4 @ 10"	#4 @ 10"
TO 14'	2.5'	4'	6"	#3 @ 6"	#3 @ 6"	#4 @ 6"
TO 14'	4.1'	8'	8"	#4 @ 12"	#4 @ 12"	#3 @ 6"
TO 14'	8.1'	10'	10"	#4 @ 8"	#4 @ 12"	#4 @ 10"
TO 14'	10.1'	12'	10"	#4 @ 6"	#4 @ 12"	#4 @ 10"

WALL AND FLOOR STEEL

CATCH BASIN REINFORCEMENT–"W" TO 14' (INCL.)

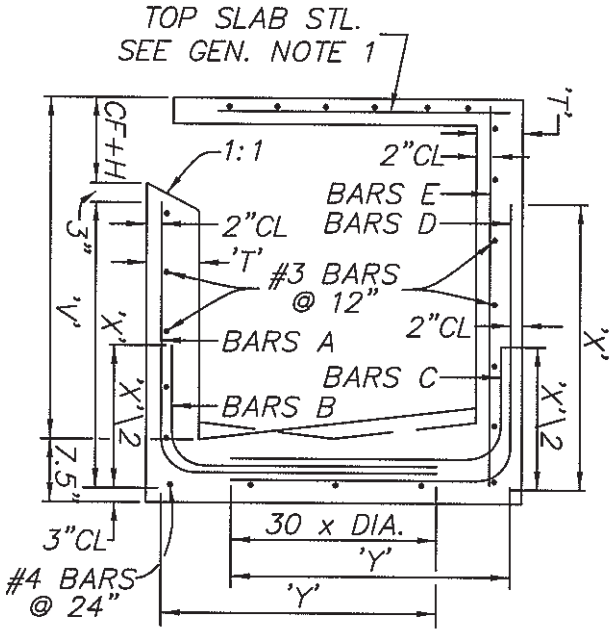

SECTION 2

'V' (FT.) FROM	'V' (FT.) TO	'T' (IN)	FRONT WALL STEEL BARS A & B	REAR WALL STEEL BARS C	REAR WALL STEEL BARS D	REAR WALL STEEL BARS E	END WALL STEEL HORIZ. & VERT.
2.5'	4'	6"	#3 @ 24"	#3 @ 12"	--	#4 @ 24"	#3 @ 18"
4.1'	5'	8"	#3 @ 20"	#3 @ 12"	--	#4 @ 24"	#3 @ 14"
5.1'	6'	8"	#3 @ 12"	#3 @ 10.5"	--	#4 @ 24"	#3 @ 14"
6.1'	7'	8"	#4 @ 17"	#3 @ 8.5"	--	#4 @ 24"	#3 @ 14"
7.1'	8'	8"	#4 @ 13"	#3 @ 6.5"	--	#4 @ 24"	#3 @ 14"
8.1'	9'	10"	#4 @ 15"	#3 @ 7.5"	--	#4 @ 20"	#3 @ 11"
9.1'	10'	10"	#4 @ 12"	#4 @ 12"	--	#4 @ 20"	#3 @ 11"
10.1'	11'	10"	#5 @ 15"	--	#4 @ 11"	#4 @ 18"	#3 @ 11"
11.1'	12'	10"	#6 @ 18"	--	#4 @ 9"	#4 @ 13"	#3 @ 11"
	'X'=('V'+'T')(CF+H+4.5)				'Y'= $\left(\frac{B+2'T'}{2}\right)$ + 15 x DIA.–2"		

WALL AND FLOOR STEEL

CATCH BASIN REINFORCEMENT–"W" GREATER THAN 14'

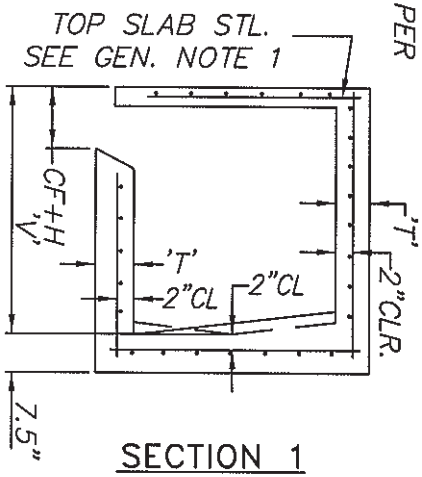

SECTION 1

APPROVED:

CITY ENGINEER

REVISION DATE: March 21, 1994

CITY OF HUNTINGTON BEACH

DEPARTMENT OF PUBLIC WORKS

CATCH BASIN REINFORCEMENT

STANDARD PLAN 309

1 of 2

GENERAL NOTES:

1. TOP SLAB REINFORCEMENT. FOR DETAILING OF REQUIRED STEEL, SEE CATCH BASIN STD. PLAN 301.

2. ALL CATCH BASINS CONSTRUCTED ON STREETS DESIGNATED AS STATE HIGHWAYS SHALL BE PER CALTRANS STANDARD PLANS, CURRENT EDITION.

3. STEEL REINFORCEMENT SHALL BE A615, STEEL TO CONCRETE SURFACE, END CLEARANCE, SHALL BE 1 1/2". VALLEY TYPE INVERT, SHOWN BY DASHED LINE IN SECTION, IS REQUIRED WHEN CONNECTOR PIPE IS ALIGNED TO END WALL OF A CATCH BASIN. FOR THE DESIGN OF CATCH BASINS WITH A 'V'-DEPTH EXCEEDING 12', SEE THE REQUIRED STRUCTURAL PLANS. #4 BARS MAY BE USED IN LIEU OF #3 BARS AS FOLLOWS:

TABLE "A"

TABLE VALUE	ALTERNATE	TABLE VALUE	ALTERNATE
#3 @ 2"	#4 @ 2"	--	--
#3 @ 2"	#4 @ 10"	#3 @ 12"	#4 @ 18"
#3 @ 6.5"	#4 @ 12"	#3 @ 14"	#4 @ 24"
#3 @ 7.5"	#4 @ 14"	#3 @ 18"	#4 @ 24"
#3 @ 8.5"	#4 @ 16"	#3 @ 20"	#4 @ 24"
#3 @ 10.5"	#4 @ 18"	#3 @ 24"	#4 @ 24"
#3 @ 11"	#4 @ 18"		

APPROVED:

CITY ENGINEER

REVISION DATE: May 2008

CITY OF HUNTINGTON BEACH

DEPARTMENT OF PUBLIC WORKS

CATCH BASIN REINFORCEMENT

STANDARD PLAN 309

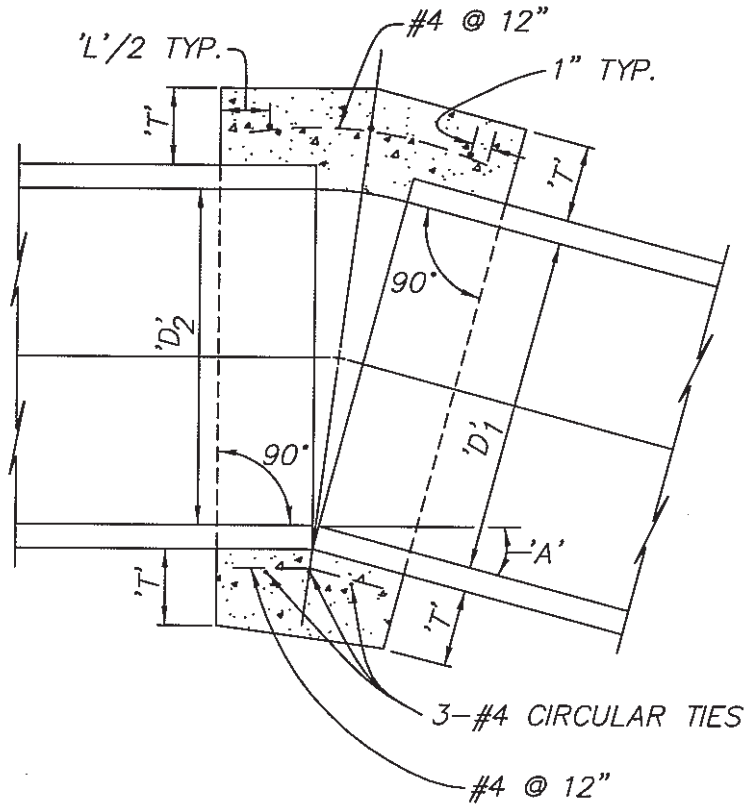

'D'	'L'	'T'
12"	1.0'	4"
18"	1.0'	5"
24"	1.0'	6"
36"	1.5'	8"
48"	1.5'	10"
57"	1.5'	10"
60"	1.75'	11"
66"	1.75'	11"

GENERAL NOTES:

1. A CONCRETE COLLAR IS REQUIRED WHERE THE CHANGE IN GRADE EXCEEDS 0.10 FT. PER FT.
2. WHERE PIPES OF DIFFERENT DIAMETERS ARE JOINED WITH A CONCRETE COLLAR, 'L' AND 'T' SHALL BE THOSE OF THE LARGER PIPE. 'D'='D'_1 OR 'D'_2, WHICHEVER IS GREATER.
3. FOR 'D' LARGER THAN 66" A SPECIAL COLLAR DETAIL IS REQUIRED.
4. FOR A PIPE SIZE NOT LISTED USE NEXT SIZE LARGER.
5. OMIT REINFORCING ON PIPES 24" AND LESS IN DIAMETER AND ON ALL PIPES WHERE ANGLE 'A' IS LESS THAN (145/'D' (INCHES)).
6. WHERE REINFORCING IS REQUIRED, THE DIAMETER OF THE CIRCLE TIES SHALL BE 'D' + (2 X WALL THICKNESS) + 8".
7. WHEN 'D'_1 IS EQUAL TO OR LESS THAN 'D'_2, JOIN INVERTS AND WHEN 'D'_1 IS GREATER THAN 'D'_2, JOIN SOFFITS.
8. PIPE MAY BE CORRUGATED METAL PIPE, CONCRETE PIPE, OR REINFORCED CONCRETE PIPE.
9. NOT TO BE USED FOR A SIZE CHANGE ON THE MAINLINE.

APPROVED:

CITY ENGINEER

REVISION DATE: March 21, 1994

CITY OF HUNTINGTON BEACH

DEPARTMENT OF PUBLIC WORKS

CONCRETE COLLAR

STANDARD PLAN 310

1 of 1

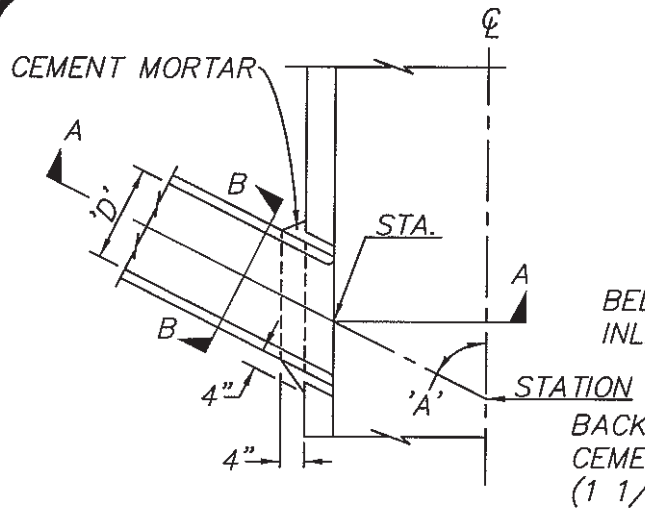

PLAN – CASE 1

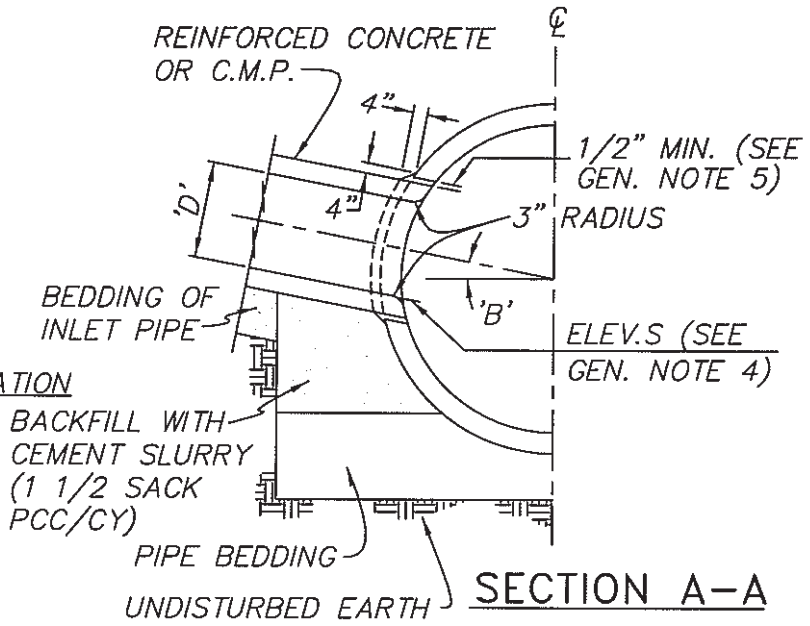

SECTION A–A

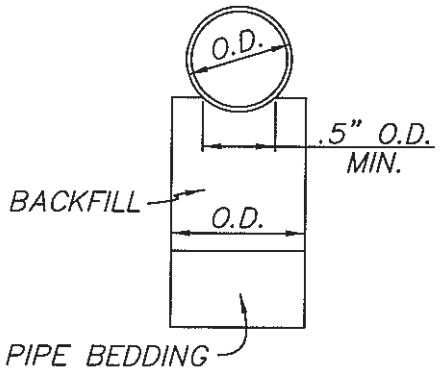

SECTION B–B

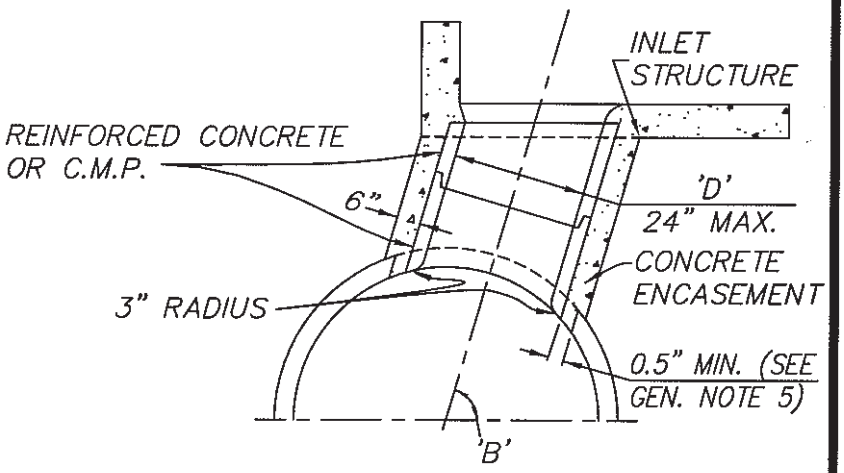

CASE 2

GENERAL NOTES:

1. ALL CORRUGATED PIPE AND FITTINGS SHALL BE GALVANIZED.
2. ANGLE A SHALL BE SHOWN ON PLANS AND SHALL BE BETWEEN 45° AND 90° AND SHALL BE 24" OR LESS.
3. IN NO CASE SHALL THE OUTSIDE DIAMETER OF THE INLET PIPE EXCEED 1/2 THE INSIDE DIAMETER OF THE MAIN STORM DRAIN.
4. IF ANGLE 'B' IS 45° OR LESS, USE CASE 1. IF ANGLE 'B' IS GREATER THAN 45°, USE CASE 2.
5. THE DIAMETER OF THE OPENING INTO THE MAIN STORM DRAIN SHALL BE THE OUTSIDE DIAMETER OF THE INLET PIPE PLUS 1" MINIMUM OR 3" MAXIMUM.

APPROVED:

CITY ENGINEER

REVISION DATE: March 21, 1994

CITY OF HUNTINGTON BEACH

DEPARTMENT OF PUBLIC WORKS

JUNCTION STRUCTURE – TYPE "C"

STANDARD PLAN 311

1 of 1

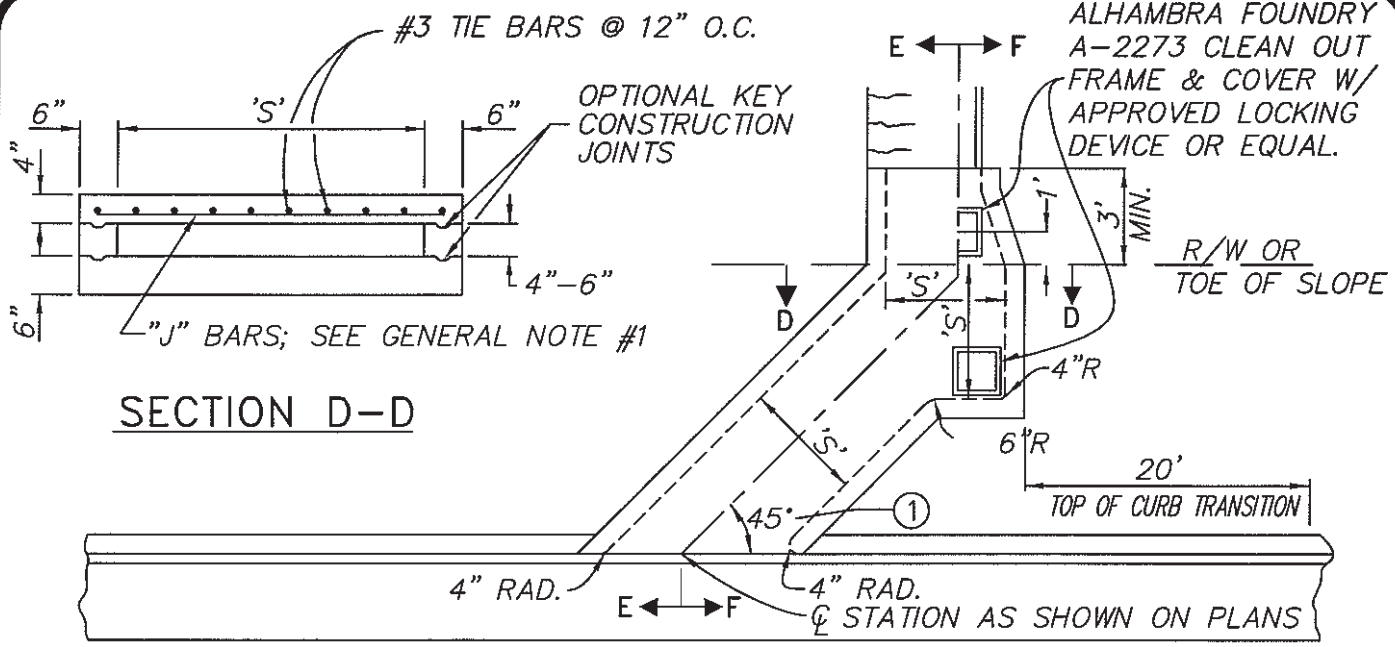

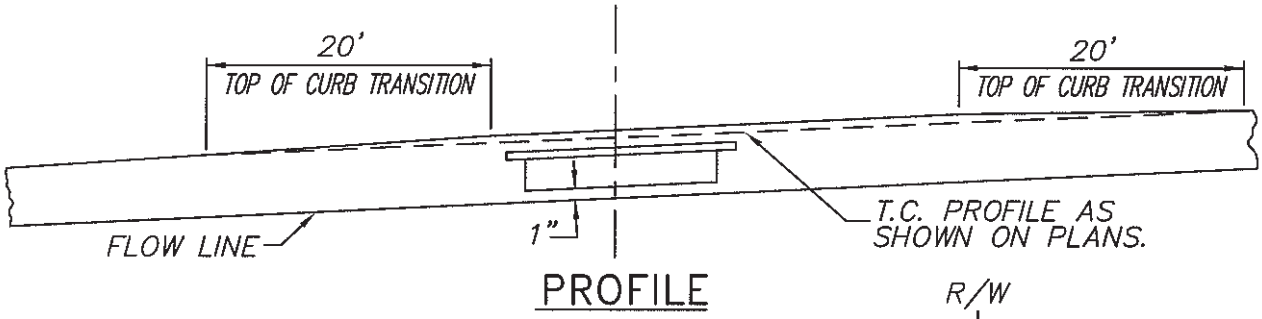

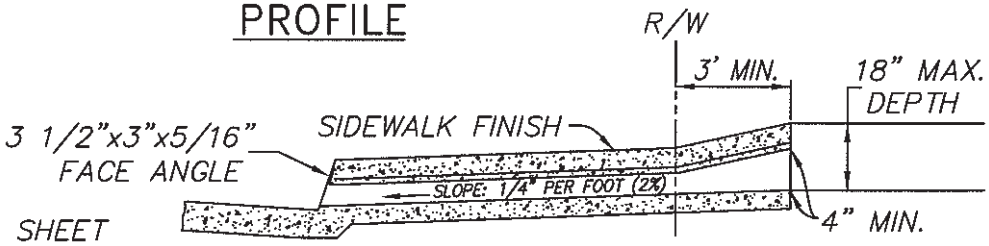

GENERAL NOTES:

1. SEE STD. PLAN 312 SHEET 4 of 4 FOR DETAILS AND NOTES.
2. SPAN 'S' AND HEIGHT OF OPENING AND CURB FACE AT CULVERT SHALL BE NOTED ON PLANS.

NOTE:

(1) UNLESS OTHERWISE APPROVED BY THE CITY ENGINEER.

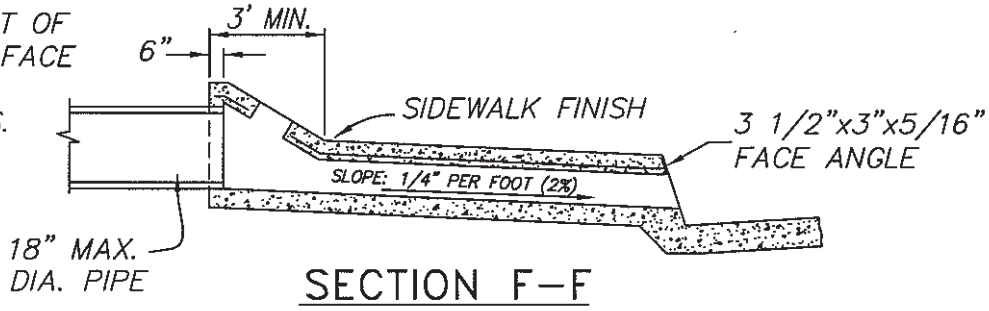

APPROVED:

CITY ENGINEER

REVISION DATE: May 2008

CITY OF HUNTINGTON BEACH

DEPARTMENT OF PUBLIC WORKS

PARKWAY CULVERT – TYPE "A"

STANDARD PLAN 312

1 of 4

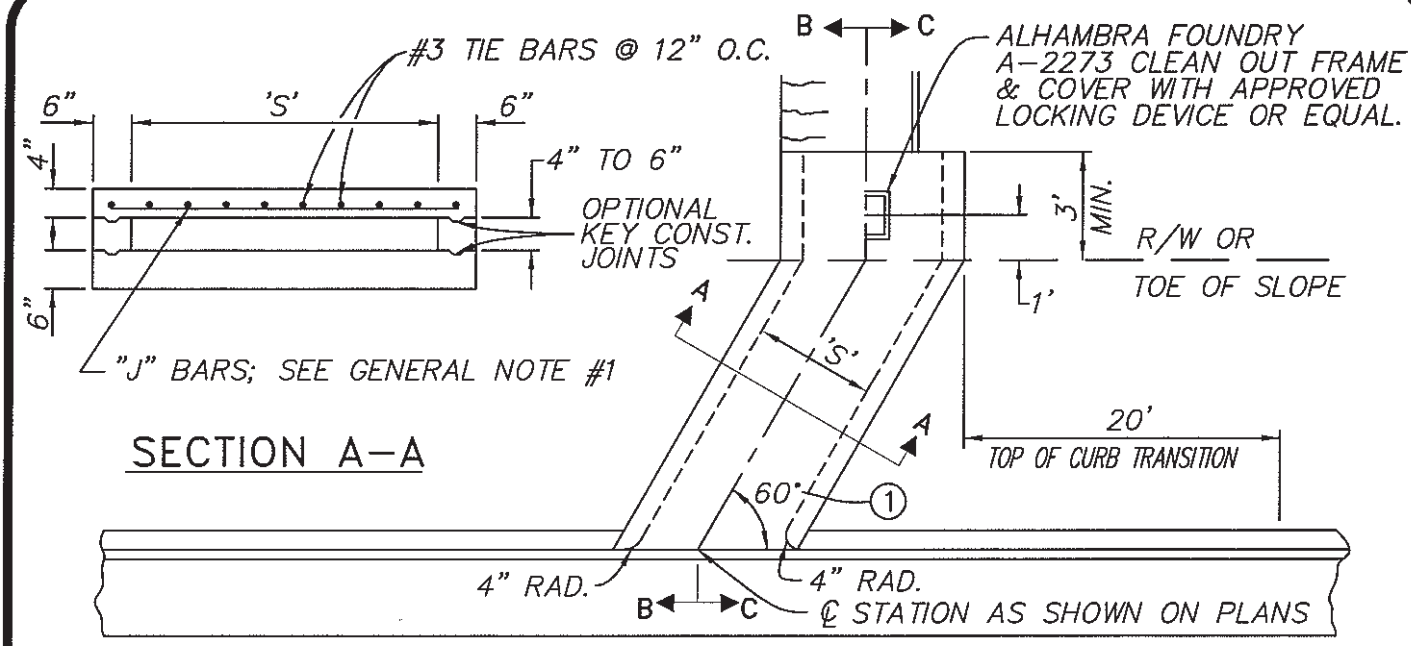

SECTION A-A

PLAN

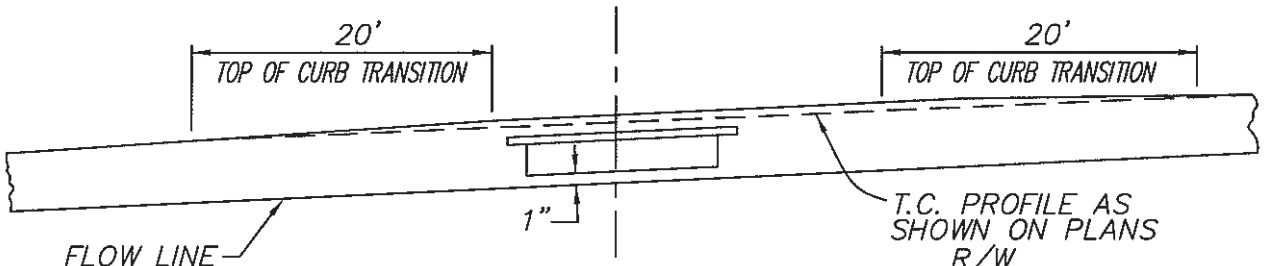

PROFILE

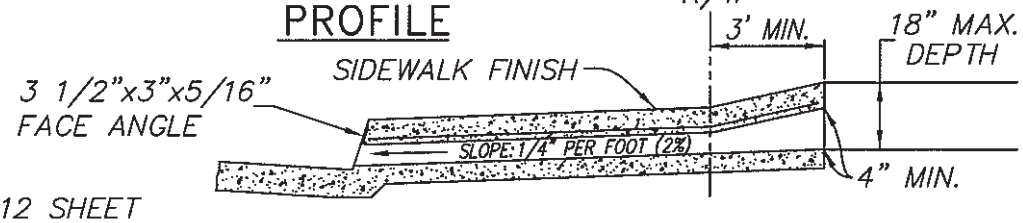

SECTION B-B

GENERAL NOTES:

1. SEE STD. PLAN 312 SHEET 4 of 4 FOR DETAILS AND NOTES.
2. SPAN 'S' AND HEIGHT OF OPENING AND CURB FACE AT CULVERT SHALL BE NOTED ON PLANS.

NOTE:

(1) UNLESS OTHERWISE APPROVED BY THE CITY ENGINEER.

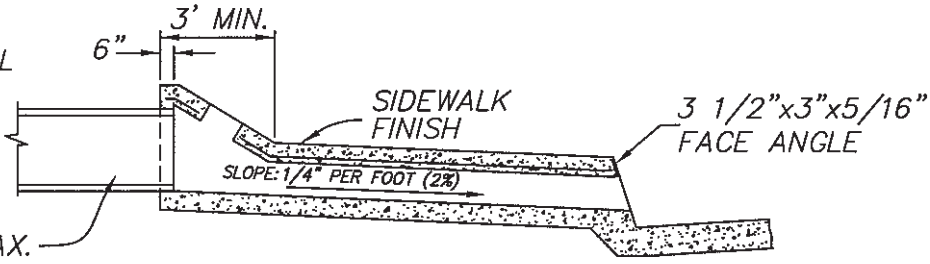

SECTION C-C

APPROVED:

CITY ENGINEER

REVISION DATE: May 2008

CITY OF HUNTINGTON BEACH

DEPARTMENT OF PUBLIC WORKS

PARKWAY CULVERT TYPE "B"

STANDARD PLAN 312

2 of 4

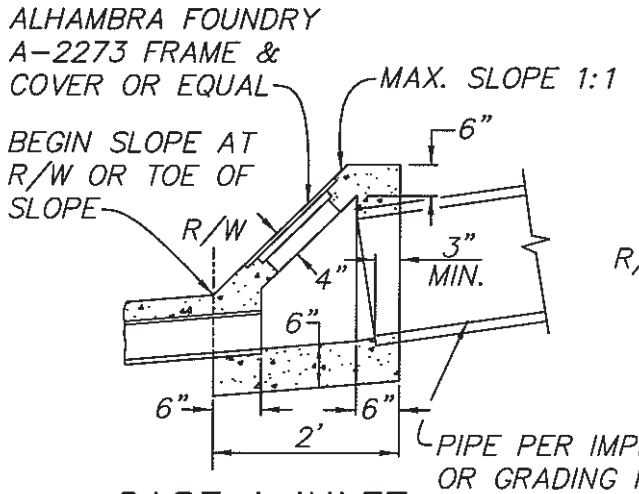

CASE I INLET

TRANSITION STRUCTURE SECTION

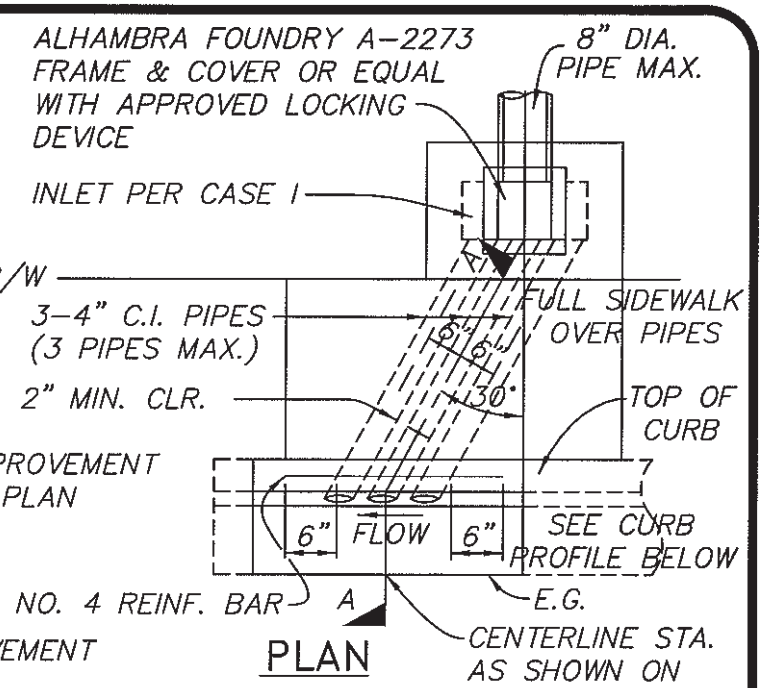

PLAN

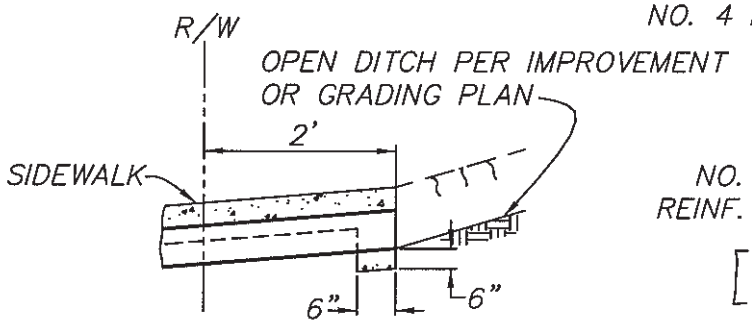

CASE II INLET

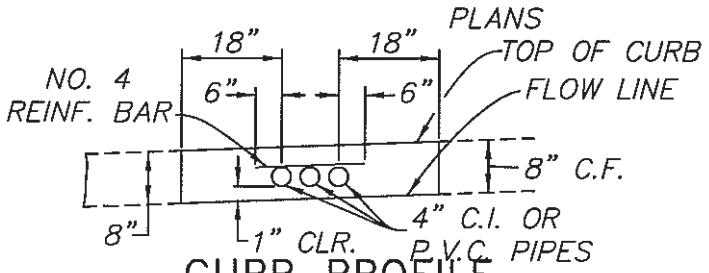

CURB PROFILE

8" NORMAL CURB FACE

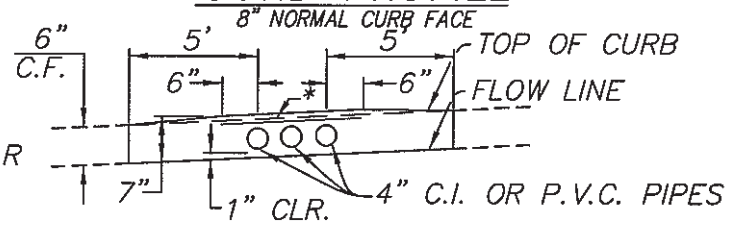

* NORMAL T.C. LINE AS SHOWN ON PROFILE

CURB PROFILE

6" NORMAL CURB FACE

GENERAL NOTES:

1. SEE STD. PLAN 312 SHEET 4 of 4 FOR DETAILS AND NOTES.
2. ALHAMBRA FOUNDRY A-470 RECTANGULAR CAST IRON PIPE MAY BE SUBSTITUTED AT THE CONTRACTOR'S OPTION OR AS SPECIFIED ON THE PLANS.
3. CAST IRON FACILITIES SHALL HAVE A BITUMINOUS COATING CONFORMING TO AASTHO DESIGNATION M190.
4. P.V.C. PIPES SHALL BE SCHEDULE 40.

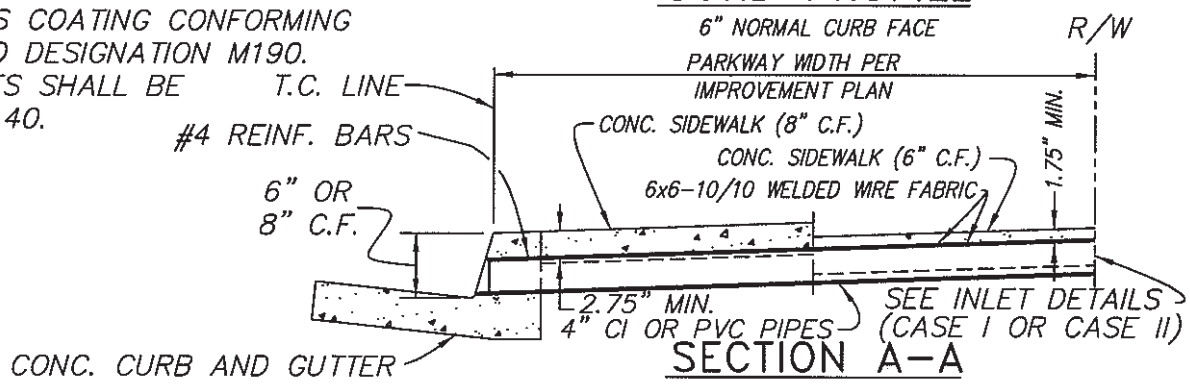

SECTION A-A

APPROVED:

CITY ENGINEER

REVISION DATE: May 2008

CITY OF HUNTINGTON BEACH

DEPARTMENT OF PUBLIC WORKS

PARKWAY CULVERT
TYPE "C"

STANDARD PLAN
312
3 of 4

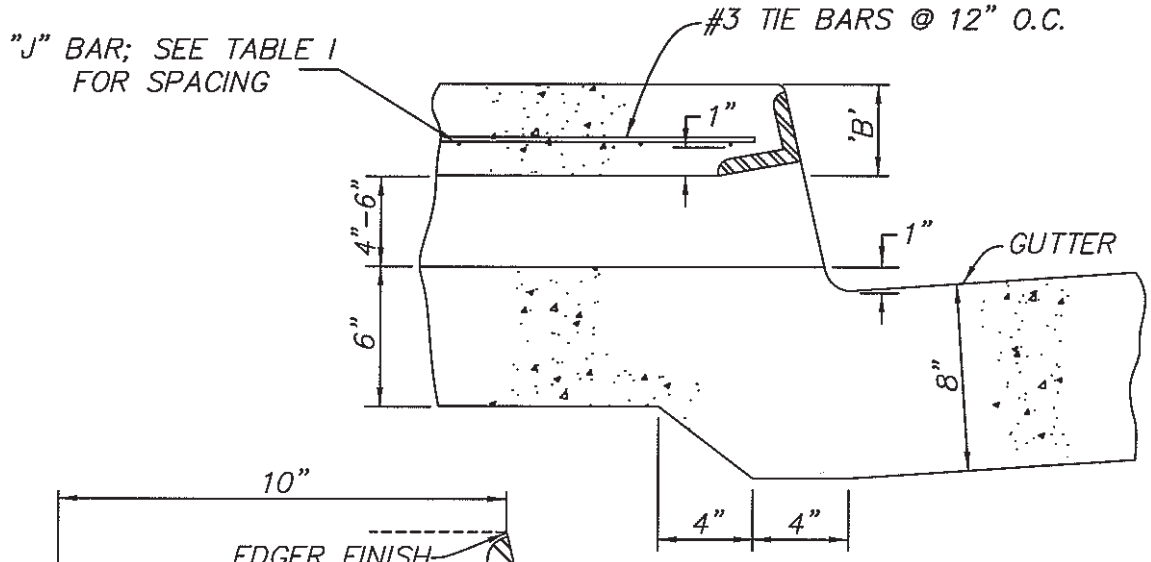

OUTLET DETAIL

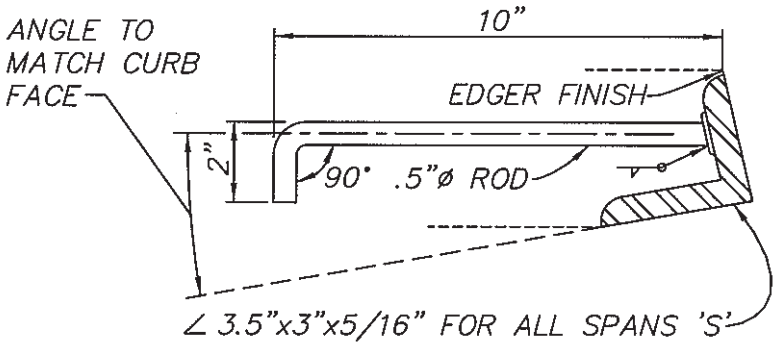

LENGTH OF CURB OPENING	NO. OF ANCHORS
3' OR LESS	2
3'-6" TO 6'-0"	3

FACE ANGLE ANCHOR DETAIL

SPAN 'S'	'B'	STEEL SCHEDULE J-BARS		
		SIZE	SPACING C-C	LENGTH
2'-0"	3"	#3	7"	2'-9"
2'-6"	"	"	"	3'-3"
3'-0"	"	"	"	3'-9"
3'-6"	"	"	6"	4'-3"
4'-0"	"	"	5"	4'-9"
4'-6"	4"	"	6.5"	5'-3"
5'-0"	"	"	5"	5'-9"
5'-6"	"	"	4"	6'-3"
6'-0"	"	"	3.5"	6'-9"

TABLE I

GENERAL NOTES:

1. USE PARKWAY CULVERT – TYPE "A" WHEN INLET VELOCITIES WILL BE 10 FPS OR GREATER.
2. USE PARKWAY CULVERT – TYPE "B" WHEN INLET VELOCITIES WILL BE LESS THAN 10 FPS.
3. USE PARKWAY CULVERT – TYPE "C" WHEN INLET VELOCITIES ARE LESS THAN 5 FPS.
4. FLOOR OF PARKWAY CULVERT SHALL HAVE A STEEL TROWEL FINISH.
5. ALL EXPOSED METAL SHALL BE GALVANIZED AFTER FABRICATION.
6. HEIGHT OF CURB OPENING FOR TYPES "A" & "B" PARKWAY CULVERT WILL VARY WITH TYPE OF CURB.
7. SPAN 'S' AND HEIGHT OF CURB OPENING WILL BE DETERMINED FROM THE REQUIRED HYDRAULIC CAPACITY AND LIMITED TO THE DIMENSION IN TABLE I.
8. REINFORCING STEEL SHALL BE 1" CLEAR TO INSIDE OF CULVERT UNLESS OTHERWISE SHOWN.

APPROVED:

CITY ENGINEER

REVISION DATE: March 21, 1994

CITY OF HUNTINGTON BEACH

DEPARTMENT OF PUBLIC WORKS

PARKWAY CULVERT DETAILS AND NOTES

STANDARD PLAN 312

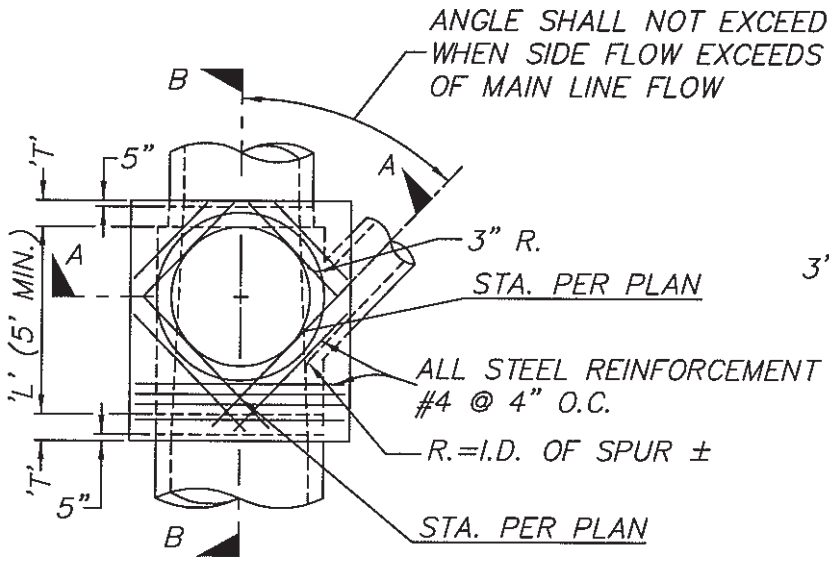

PLAN

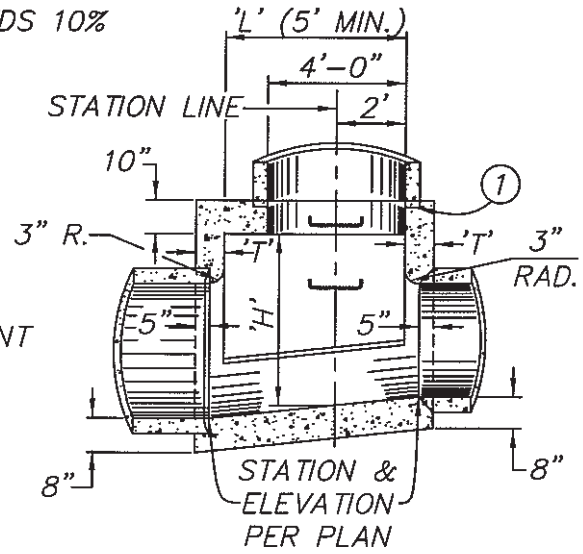

SECTION B-B

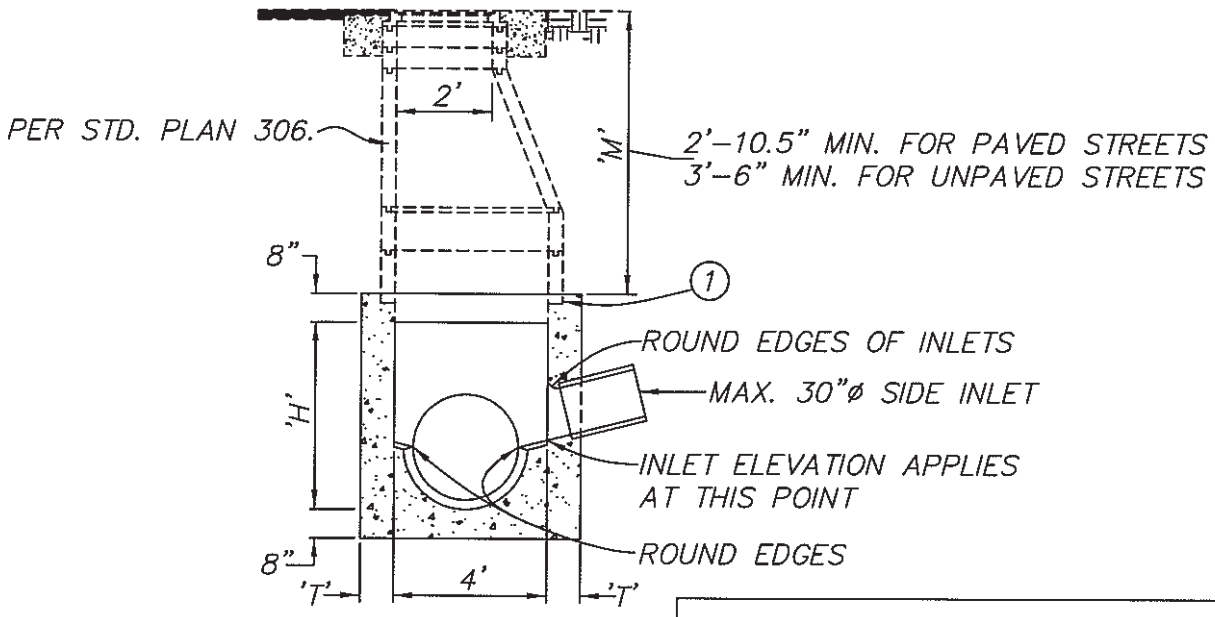

SECTION A-A

REFER TO STD. PLAN 313, SHEET 2 of 2 FOR GENERAL NOTES

NOTE:

(1) 2" DEEP SEAT TO CORRESPOND TO MANHOLE SHAFT, GROUT BETWEEN SHAFT AND SEAL.

APPROVED:

CITY ENGINEER

REVISION DATE: MAY 2008

CITY OF HUNTINGTON BEACH

DEPARTMENT OF PUBLIC WORKS

JUNCTION STRUCTURE – TYPE "D"

STANDARD PLAN 313

1 of 2

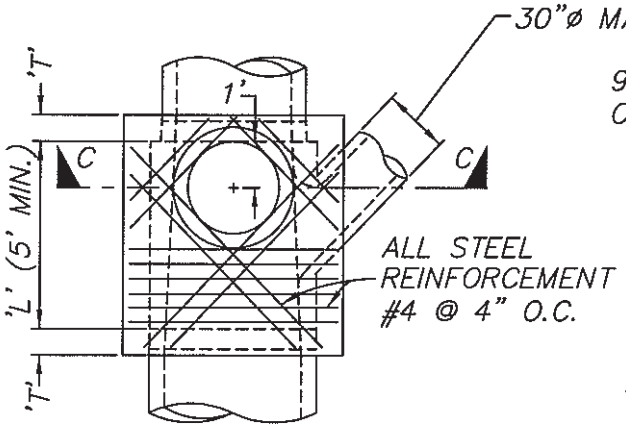

DETAIL N

(SHAFT NOT SHOWN)
SEE GENERAL NOTE 3.

	MAX.	MIN.
FOR PAVED STREETS	11"	8 1/2"
FOR UNPAVED STREETS	16"	15"

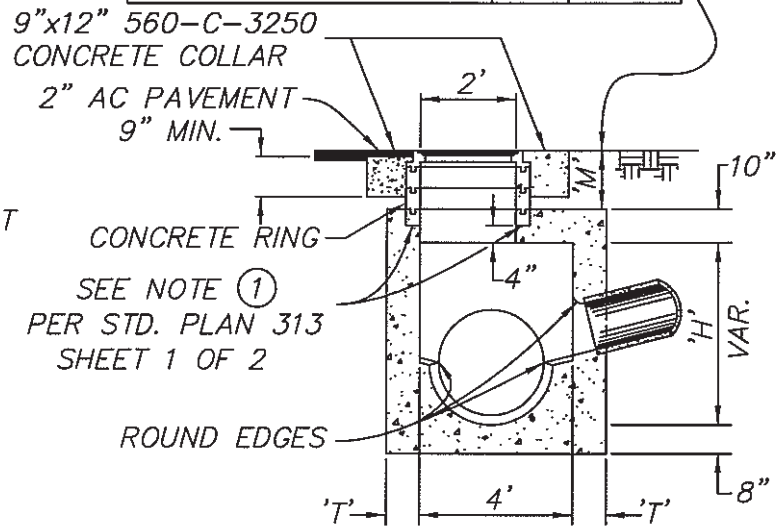

SECTION C-C

GENERAL NOTES:

1. HEIGHT-'H' (IN SECTION A-A AND SECTION B-B) SHALL BE NOT LESS THAN 4'-0", BUT MAY BE INCREASED AT OPTION OF THE ENGINEER PROVIDED THAT THE VALUE OF 'M' SHALL BE NOT LESS THAN THE MINIMUM SPECIFIED AND THAT THE REDUCER SHALL BE USED FOR 'H' (IN SECTION C-C). SEE NOTE 4.
2. LENGTH-'L' MAY BE INCREASED A MAX. OF ONE FOOT AT EACH END TO MEET PIPE ENDS. CONTINUE #4 AT 4" O.C.
3. SHAFT SHALL BE CONSTRUCTED PER SECTION C-C AND DETAIL N WHEN DEPTH 'M' FROM STREET GRADE TO TOP OF BOX IS LESS THAN 2'-10.5" FOR PAVED STREETS OR 3'-6" FOR UNPAVED STREETS.
4. DEPTH-'M' MAY BE REDUCED TO A MINIMUM 6" WHEN LARGER VALUES OF 'M' WOULD REDUCE 'H' (IN SECTION C-C) TO 3'-6" OR LESS.
5. 'T' SHALL BE 8" FOR VALUES OF 'H' LESS THAN OR EQUAL TO 8'. 'T' SHALL BE 10". FOR VALUES OF 'H' GREATER THAN 8'.
6. STEPS SHALL BE STEEL REINFORCED CO-POLYMER POLYPROPYLENE M.H. STEPS TYPE PS2-PFS.
7. REINFORCED STEEL SHALL BE #4 BARS, DEFORMED, STRAIGHT BARS 1.5" CLEAR FROM FACE OF CONCRETE.
8. STATIONS OF MANHOLES SHOWN ON IMPROVEMENT PLAN APPLY AT CENTER LINE OF SHAFT.
9. FLOOR OF MANHOLE SHALL BE STEEL-TROWELED.
10. RINGS, REDUCER, AND PIPE FOR ACCESS SHAFT SHALL BE SEATED IN 1:2 MORTAR AND NEATLY POINTED OR WIPED INSIDE SHAFT.
11. LEDGE SHALL BE SLOPED AT 2" PER FOOT.
12. USE JUNCTION STRUCTURE TYPE "D" FOR OUTLET PIPE DIAMETER OF 42" OR LESS, AND INLET DIAMETER OF 30" OR LESS.

APPROVED:

CITY ENGINEER

REVISION DATE: MAY 2008

CITY OF HUNTINGTON BEACH

DEPARTMENT OF PUBLIC WORKS

JUNCTION STRUCTURE - TYPE "D"

STANDARD PLAN 313

2 of 2

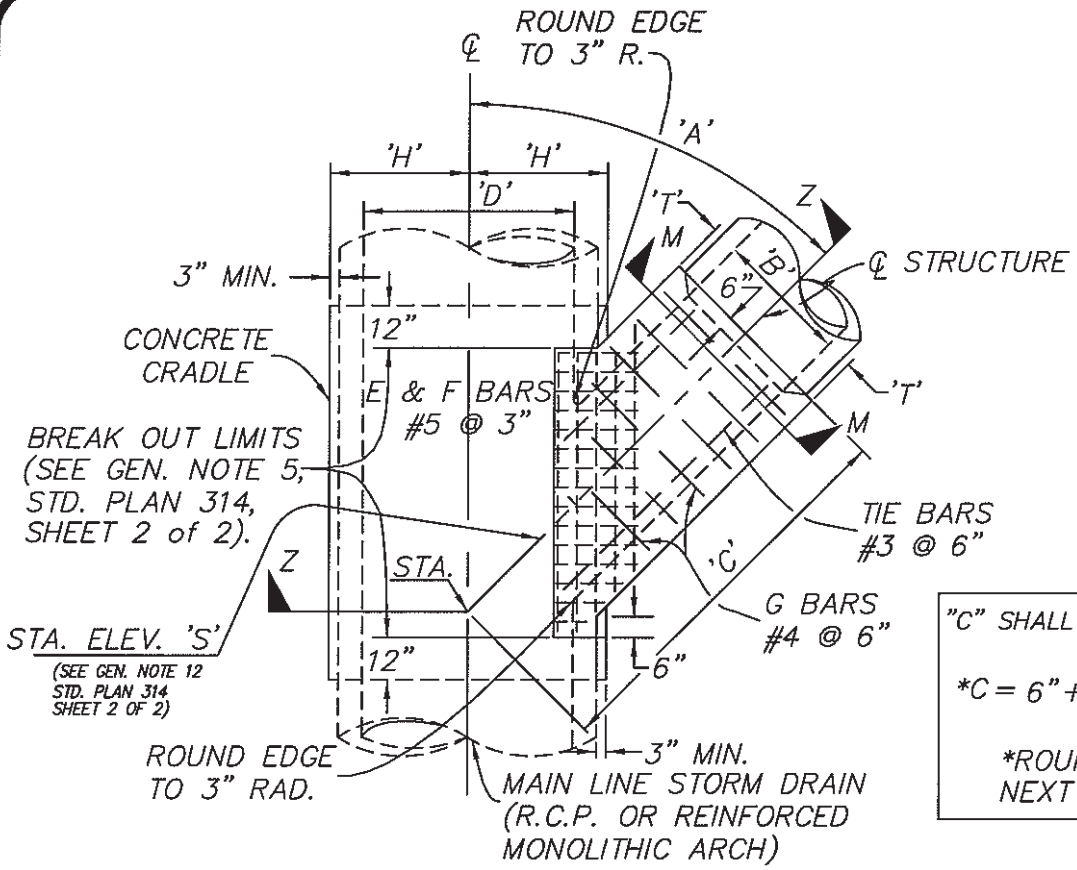

PLAN

"C" SHALL BE SHOWN ON PLANS

$$*C = 6" + \left(\frac{\frac{7}{12}D + 6"}{SIN\ A}\right) + \left(\frac{\frac{B}{2} + T}{TAN\ A}\right)$$

*ROUND OFF TO THE NEXT HIGHER FOOT

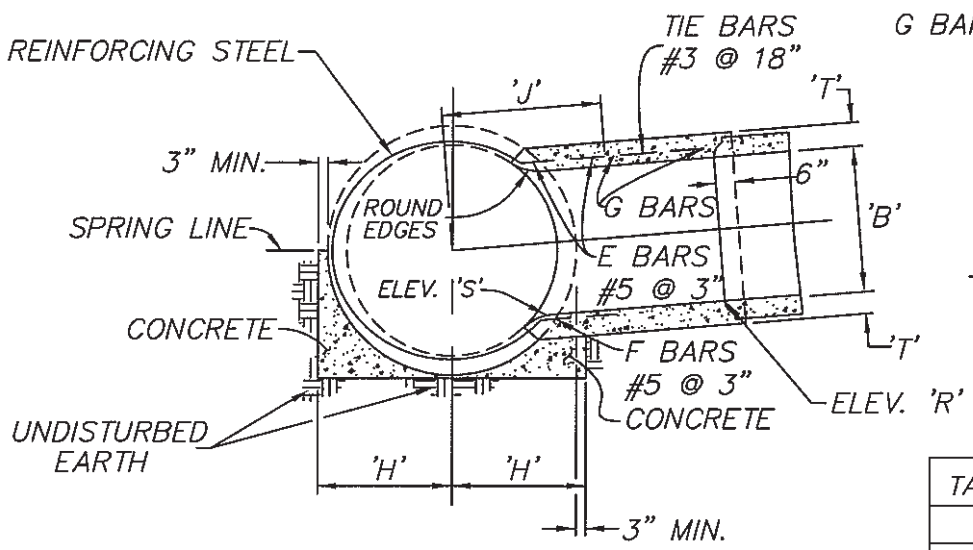

SECTION Z–Z

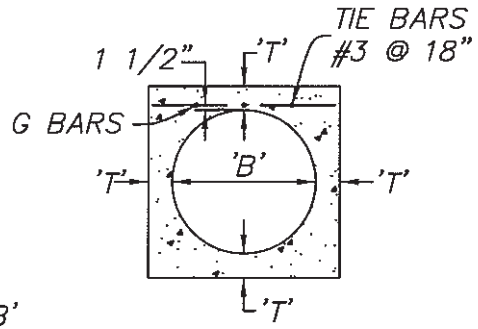

SECTION M–M

TABLE OF VALUES FOR 'T'	
'B'	'T'
18" TO 21"	6"
24" TO 39"	7"

APPROVED:

CITY ENGINEER

REVISION DATE: MAY 2008

CITY OF HUNTINGTON BEACH

DEPARTMENT OF PUBLIC WORKS

JUNCTION STRUCTURE TYPE "E"

STANDARD PLAN 314

1 of 2

GENERAL NOTES:

1. JUNCTION STRUCTURE TYPE "E" SHALL BE USED ONLY WHEN SUFFICIENT MEANS OF ACCESS IS AVAILABLE FOR STORM DRAIN MAINTENANCE.
2. JUNCTION STRUCTURE TYPE "E" IS TO BE USED WHEN O.D. OF 'B' IS GREATER THAN 1/2 THE I.D. AT 'D' OR 'B' IS LARGER THAN 24". 'B' SHALL NOT EXCEED 3/4 OF 'D' OR 39". WHERE 'B' IS LESS THAN 24", USE J.S. TYPE "E" OR J.S. TYPE "C". WHERE 'B' EXCEEDS 3/4 'D' OR 39", USE JUNCTION STRUCTURE TYPE "B" WITHOUT MANHOLE.
3. VALUES OF 'A', 'B', 'C', AND 'D' ARE SHOWN ON PROJECT DRAWINGS. ELEVATION 'R' AND ELEVATION 'S' ARE SHOWN WHEN REQUIRED PER NOTE 12.
4. ELEVATION 'S' APPLIES AT INSIDE WALL OF STRUCTURE.
5. BREAKOUT LIMITS SHALL BE DETERMINED AS FOLLOWS:
   UPSTREAM LIMIT – THE INTERSECTION OF THE OUTSIDE OF THE SPUR WALL WITH THE MAIN LINE PIPE WALL.
   DOWNSTREAM LIMIT – 6" DOWNSTREAM OF THE INTERSECTION OF THE OUTSIDE OF THE SPUR WALL WITH THE MAIN LINE PIPE WALL.
   THE OPENING SHALL BE RECTANGULAR AND CUT SQUARE TO THE PIPE SURFACE WITHOUT DAMAGING THE REINFORCING STEEL. PROVIDE A CONCRETE ENCASEMENT 1' ABOVE THE TOP OF THE MAIN LINE PIPE TO THE LIMITS OF THE CONCRETE CRADLE IF A JOINT IN THE MAIN LINE PIPE FALLS WITHIN THE LIMITS OF THE CRADLE.
6. THE TRANSVERSE REINFORCEMENT IN PIPE SHALL BE CUT AT CENTER OF OPENING AND BENT INTO TOP AND BOTTOM SLABS OF SPUR.
7. THE MAIN LINE PIPE SHALL BE CRADLED AND ENCASED IN 1:3:5 MIX CONCRETE, EXTENDING LONGITUDINALLY 12" BEYOND THE LIMITS OF BREAKOUT (SEE NOTE 5); AND TRANSVERSELY A DISTANCE OF H ON EACH SIDE OF THE CENTERLINE OF PIPE. H=1/2 O.D. OF PIPE + 3" MIN. CRADLE MAY BE OMITTED ON SIDE OPPOSITE LATERAL INLET WHEN CONSTRUCTED IN CONNECTION WITH EXISTING STORM DRAIN.
8. REINFORCING STEEL SHALL BE PLACED 1 1/2" CLEAR FROM FACE OF CONCRETE, UNLESS OTHERWISE SHOWN.
9. E AND F BARS SHALL BE CARRIED TO A POINT NOT LESS THAN J DISTANCE FROM CENTERLINE. 'J'=7/12 D + 6".
10. FLOOR OF STRUCTURE SHALL BE STEEL TROWELED TO SPRING LINE.
11. WHEN JUNCTION STRUCTURE TYPE "E" IS SPECIFIED WITH REINFORCED MONOLITHIC ARCH STORM DRAIN VALUE 'D' SHALL REFER TO THE CLEAR SPAN OF THE ARCH. REINFORCING STEEL SHALL BE CUT AND BENT INTO JUNCTION STRUCTURE IN THE SAME MANNER AS FOR PIPE. CONCRETE CRADLE UNDER REINFORCED MONOLITHIC ARCH IS NOT REQUIRED.
12. SIDE INLET PIPE SHALL ENTER MAIN LINE RADIALLY WHEN ELEVATIONS 'R' AND 'S' ARE NOT SHOWN ON PROJECT DRAWINGS. WHEN SIDE INLET PIPE ENTERS MAIN LINE OTHER THAN RADIALLY, ELEVATION 'S' SHALL BE SHOWN ON PROJECT DRAWINGS AND SIDE INLET PIPE SHALL BE LAID ON A STRAIGHT GRADE FROM ELEVATION 'S' TO CATCH BASIN OR GRADE BREAK IN LINE. ELEVATION 'R' SHALL BE SHOWN ON PROJECT DRAWINGS ONLY WHEN STUB IS TO BE PROVIDED IN MAIN LINE FOR FUTURE SIDE INLET PIPE.
13. STATIONS SPECIFIED ON DRAWINGS APPLY AT THE INTERSECTION OF CENTERLINES OF MAIN LINE AND LATERALS, EXCEPT THAT STATIONS FOR CATCH BASIN CONNECTOR PIPE APPLY AT INSIDE OF STRUCTURE.
14. CONCRETE SHALL BE 560–C–3250.

APPROVED:

CITY ENGINEER

REVISION DATE: March 21, 1994

CITY OF HUNTINGTON BEACH

DEPARTMENT OF PUBLIC WORKS

JUNCTION STRUCTURE TYPE "E"

STANDARD PLAN 314

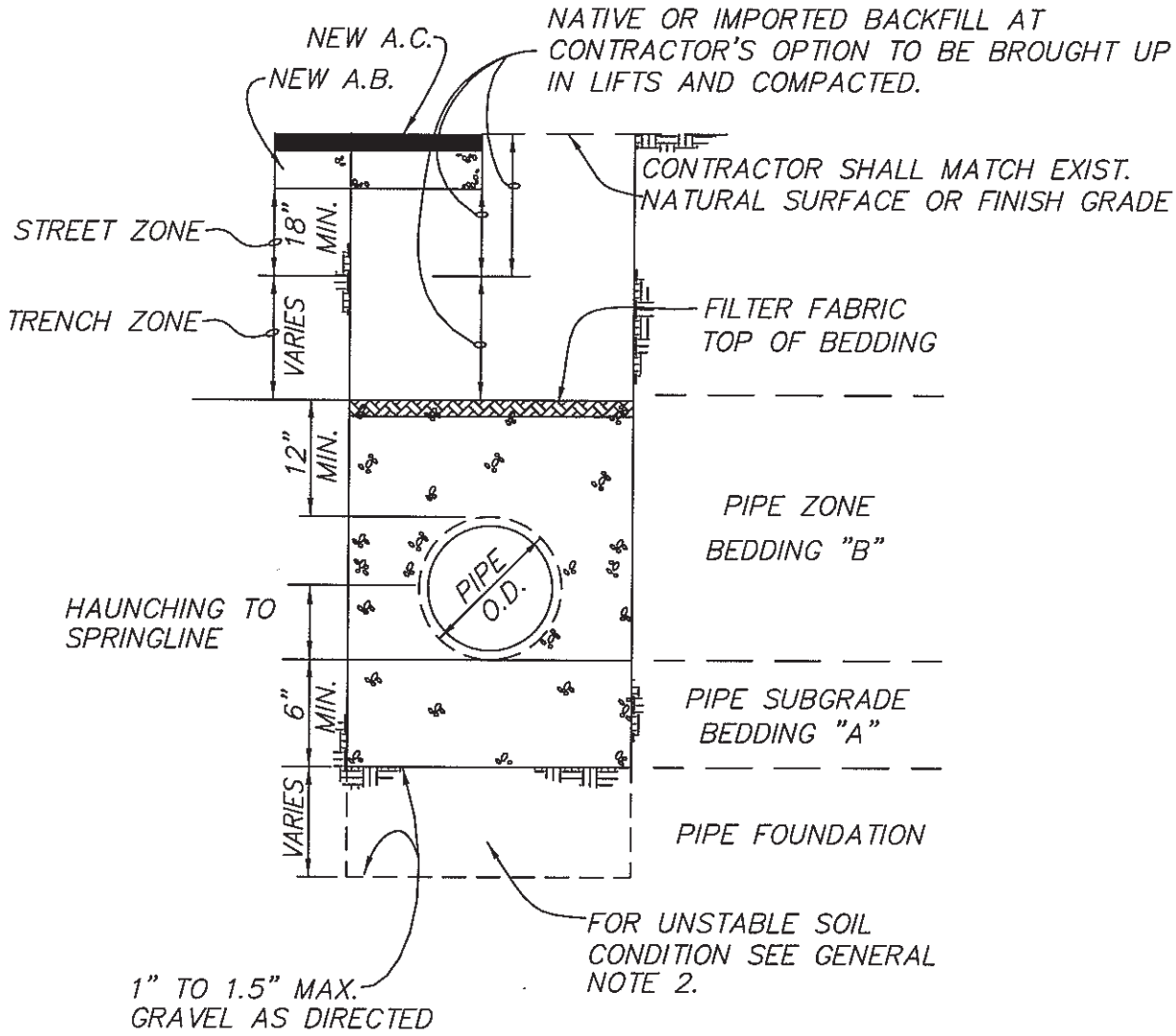

GENERAL NOTES:

1. BEDDING "A" SHALL BE 3/4" MAX. CRUSHED ROCK.
2. TRENCH WIDTH AND BEDDING "B", SHALL BE PER STD. PLAN 315 , SHT. 2 OF 2.
3. IF UNSTABLE SOIL IS ENCOUNTERED, CITY PUBLIC WORKS INSPECTOR WILL DETERMINE DEPTH OF REMOVAL AND SIZE OF FOUNDATION ROCK.
4. 2 SACK SLURRY CEMENT BACKFILL SHALL BE USED WHERE COVER IS UNDER 4'

APPROVED:

CITY ENGINEER

REVISION DATE: May 2008

CITY OF HUNTINGTON BEACH

DEPARTMENT OF PUBLIC WORKS

H.D.P.E. PIPE BEDDING DETAILS

STANDARD PLAN 315

TRENCH WIDTH & BEDDING "B" REQUIREMENTS:

OPTION 1

SAND COMPACTED TO A RELATIVE COMPACTION OF NOT LESS THAN 90%.

PIPE DIAMETER	TRENCH WIDTH
18" TO 36"	O.D.+36"
39" TO 48"	O.D.+48"

OPTION 2

3/4" MAX. CRUSHED ROCK COMPACTED TO A RELATIVE COMPACTION OF NOT LESS THAN 90%.

PIPE DIAMETER	TRENCH WIDTH
18" TO 36"	O.D.+24"
39" TO 48"	O.D.+36"

OPTION 3

SLURRY OR CLSM, 1 SACK CEMENT

PIPE DIAMETER	TRENCH WIDTH
18" TO 48"	O.D.+10"

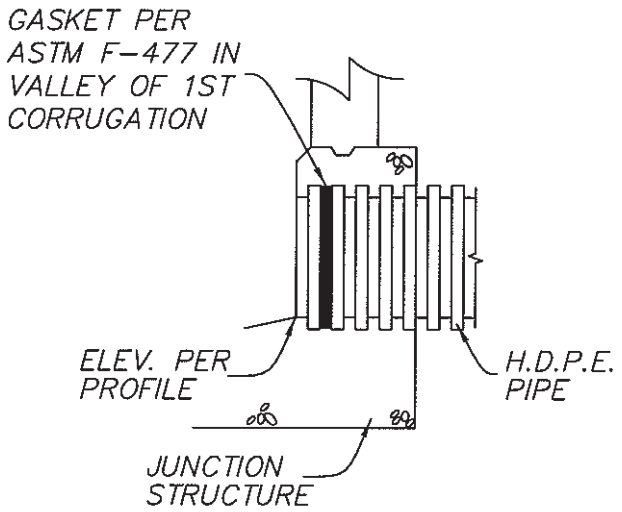

MANHOLE CONNECTION DETAILS

APPROVED:

CITY ENGINEER

REVISION DATE: MAY 2008

CITY OF HUNTINGTON BEACH

DEPARTMENT OF PUBLIC WORKS

H.D.P.E. PIPE BEDDING DETAILS

STANDARD PLAN 315

SECTION

400

APPLICABLE FOR INTERSECTIONS WHERE EITHER ROADWAY HAS A SPEED LIMIT OF 30MPH OR MORE.
HIGHWAY GOTHIC SERIES C FONT SHALL BE USED WITH THIS DESIGN LAYOUT.

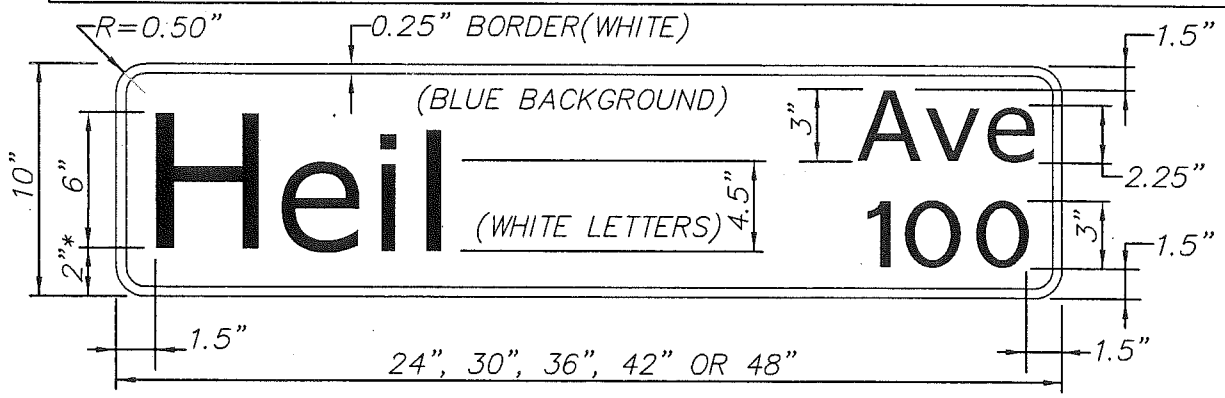

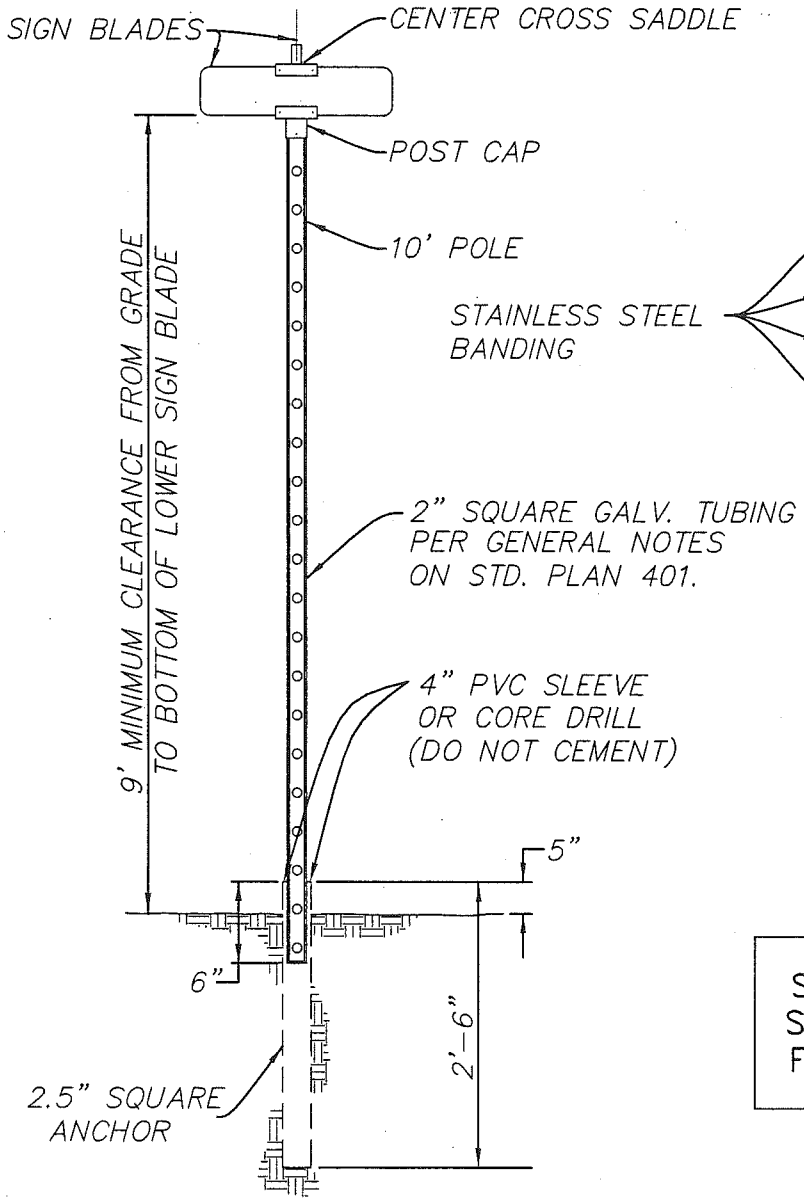

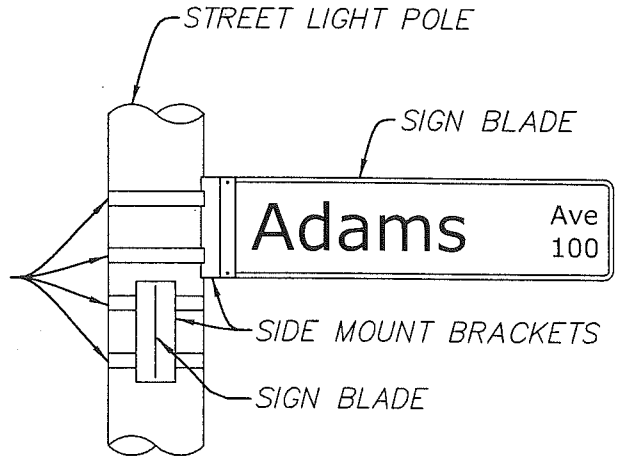

ALTERNATE MOUNTING

SEE STD. PLAN 401, SHEETS 4 & 5 of 5, FOR GENERAL NOTES.

*=3" WHERE STREET NAME CONTAINS A LOWER CASE g,j,p,q, OR y.

APPROVED:

TRANSPORTATION MANAGER

REVISION DATE: 4/14/2016

CITY OF HUNTINGTON BEACH

DEPARTMENT OF PUBLIC WORKS

STREET SIGN ASSEMBLY
30 MPH OR MORE

STANDARD PLAN
401
1 of 5

APPLICABLE FOR INTERSECTIONS OF TWO ROADWAYS WHERE BOTH HAVE A SPEED LIMIT OF 25MPH OR LESS.
HIGHWAY GOTHIC SERIES D FONT SHALL BE USED WITH THIS DESIGN LAYOUT.

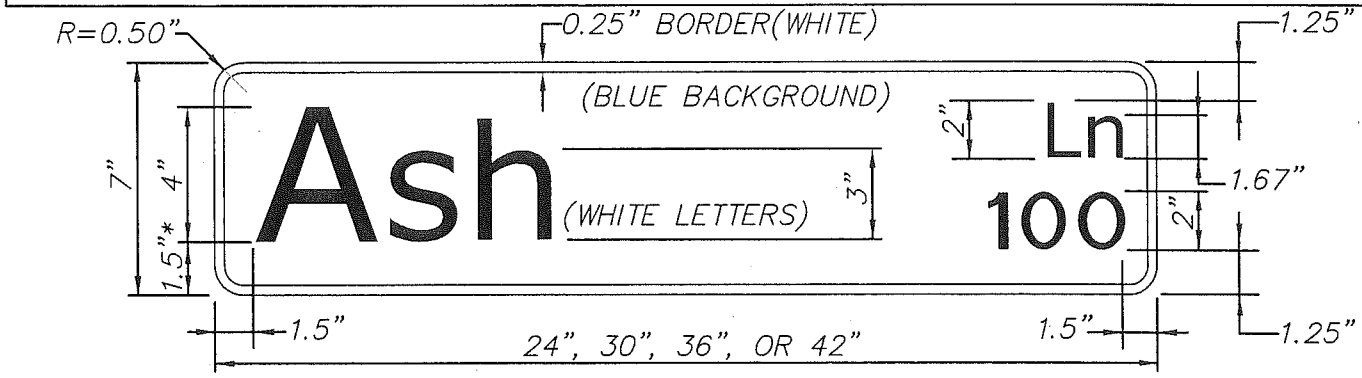

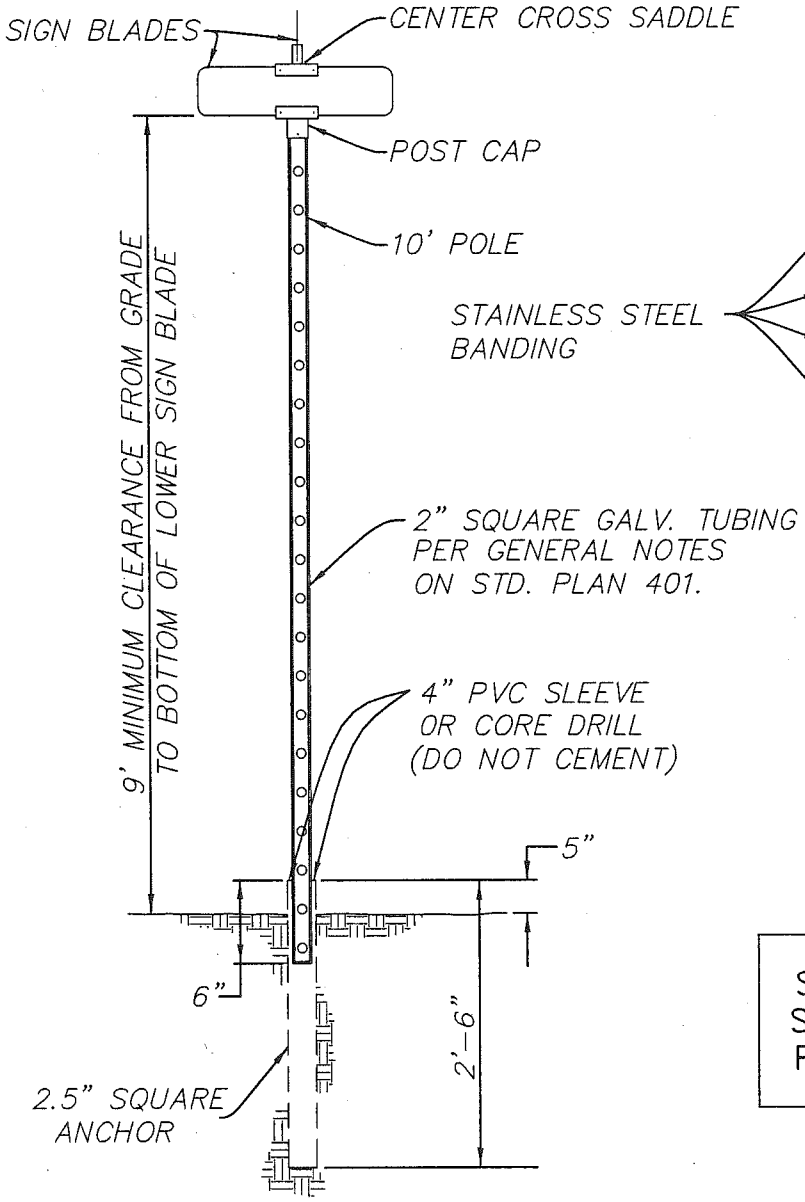

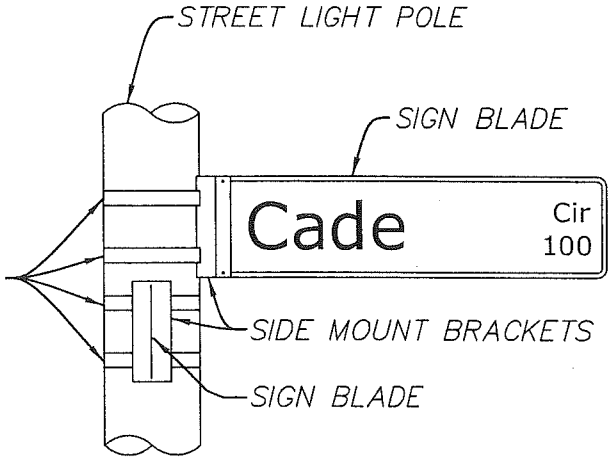

ALTERNATE MOUNTING

SEE STD. PLAN 401, SHEETS 4 & 5 of 5, FOR GENERAL NOTES.

*=2" WHERE STREET NAME CONTAINS A LOWER CASE g,j,p,q,OR y.

APPROVED:

TRANSPORTATION MANAGER

REVISION DATE: 4/14/2016

CITY OF HUNTINGTON BEACH

DEPARTMENT OF PUBLIC WORKS

STREET SIGN ASSEMBLY
25MPH OR LESS

STANDARD PLAN
401
2 of 5

SEE STD. PLAN 401, SHEETS 4 & 5 of 5, FOR GENERAL NOTES.

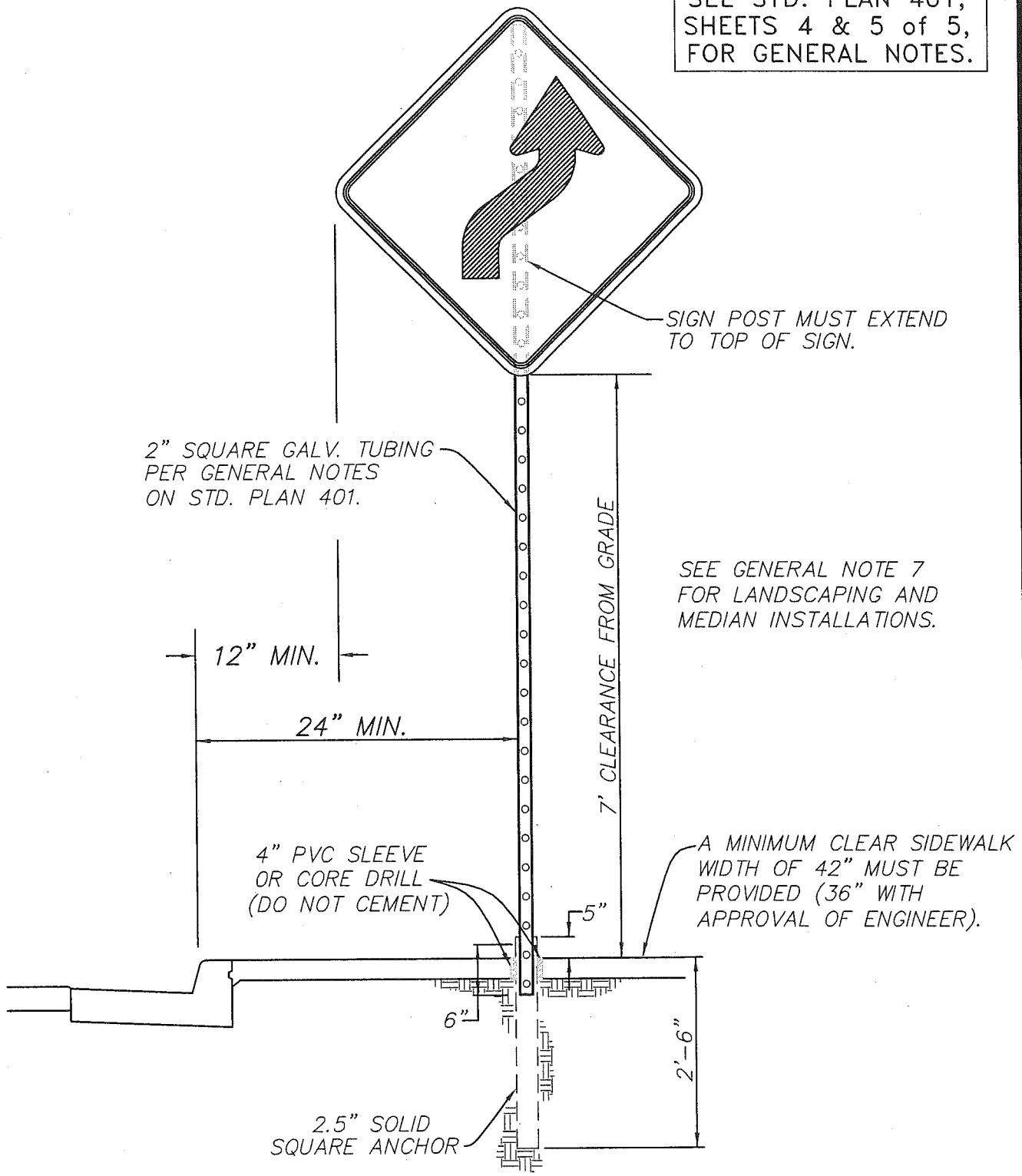

APPROVED:

TRANSPORTATION MANAGER

REVISION DATE: 4/14/2016

CITY OF HUNTINGTON BEACH

DEPARTMENT OF PUBLIC WORKS

STREET SIGN ASSEMBLY

STANDARD PLAN 401

3 of 5

GENERAL NOTES:

1. DESIGN
EACH FOUR-WAY UNIT SHALL CONSIST OF TWO DOUBLE-FACED SIGNS WITH STREET NAMES MOUNTED AT RIGHT ANGLES TO EACH OTHER AND PERPENDICULAR TO CORRESPONDING STREETS. LOCATIONS SHALL BE AS SHOWN ON THE PLAN.

2. BRACKET ASSEMBLIES
POST CAP SHALL BE MADE TO MOUNT ON 2" GALVANIZED SQUARE TUBING, CAST IN ONE PIECE. BANDING MATERIAL SHALL BE STAINLESS STEEL STRAPPING. POST CAP AND CENTER CROSS SADDLE SHALL BE ONE PIECE DIE CAST ALUMINUM. SIDE MOUNT BRACKET SHALL BE EXTRUDED ALUMINUM, ONE PIECE.
ALL SETS OF BRACKETS SHALL BE TAPPED AND DRILLED FOR 10-EACH 5/16" DIA. ZINC DICHROMATE PLATED ALLEN-TYPE SET SCREWS, HAVING SELF-LOCKING SAWTOOTH ENDS. ALL BOLTS SHALL HAVE FIBER WASHERS NEXT TO SIGN FACE AND METAL WASHERS NEXT TO BACKING NUT.

3. SIGN POST MATERIAL
SIGN POST SHALL BE 12 GAUGE, 2" GALVANIZED SQUARE TUBING WITH 3/8" HOLES ON ALL 4 SIDES, 1" O.C. (UNISTRUT, TELSPAR, OR APPROVED EQUAL). ANCHOR SHALL BE ONE PIECE, 7 GAUGE, 2.5" SQUARE TUBING (ONE SIZE LARGER), GALVANIZED AFTER FABRICATION, STEEL POSTS SHALL CONFORM TO THE STANDARD SPECIFICATIONS FOR HOT ROLLED CARBON SHEET STEEL, COMMERCIAL QUALITY, ASTM DES A-569-72, (IN LINE GALVANIZED ZINC COATING) AND HAVE A CROSS-LINKED POLYURETHANE ACRYLIC EXTERIOR COATING.

4. SIGN BLANK MATERIAL
SIGN BLANKS SHALL BE EXTRUDED FROM 6063T-4 ALUMINUM ALLOY (STREET NAME SIGNS SHALL BE SHEET ALUMINUM 0.125" GAUGE MINIMUM AND ROADWAY SIGNS SHALL BE ALUMINUM 0.80" GAUGE MINIMUM).

5. SIGN FINISH
SIGN FACES SHALL BE HIGH INTENSITY PRISMATIC SHEETING CONFORMING TO ASTM TYPE III OR GREATER (3M HIGH INTENSITY PRISMATIC SHEETING SERIES 3900 OR APPROVED EQUIVALENT).

SIGN FACES SHALL INCLUDE ANTI-GRAFFITI FILM (3M 1160, NIPPON F-CAL CLEAR EF-40801 OR APPROVED EQUIVALENT).

6. LETTERING
STREET NAME SIGNS ON ARTERIAL ROADWAYS SHALL BE UPPER AND LOWER CASE WITH 6" UPPER CASE AND 4 1/2" LOWER CASE. EACH NAME SHALL BE INDIVIDUALLY LAID OUT TO FIT A 24", 30" 36", 42" OR 48" LENGTH SIGN.

STREET NAME SIGN LETTERING FOR NON-ARTERIAL ROADWAYS SHALL BE 4"

FOR NUMERICAL STREETS THE SUFFIX SHALL LOWER CASE (I.E. 12th).

THE STREET NAME SIGN FONT FOR ROADWAYS WITH A SPEED LIMIT OF 30MPH OR MORE SHALL BE HIGHWAY GOTHIC, SERIES C, UPPER AND LOWER. THE STREET NAME FONT FOR ROADWAYS 25 MPH OR LESS SHALL BE HIGHWAY GOTHIC, SERIES D, UPPER AND LOWER. THE FONT FOR ALL OTHER ROADWAY SIGNS SHALL BE OF THE ROUNDED TYPE CONFORMING WITH THE STANDARD ALPHABET FOR THE STATE OF CALIFORNIA HIGHWAY SIGNS.

APPROVED: TRANSPORTATION MANAGER REVISION DATE: 4/14/2016	CITY OF HUNTINGTON BEACH DEPARTMENT OF PUBLIC WORKS STREET SIGN ASSEMBLY	STANDARD PLAN 401 4 of 5

GENERAL NOTES: (CONT.)

7. SIGN POST ANCHOR

ROADSIDE SIGNS:	DRIVE SIGN POST ANCHOR INTO GROUND APPROXIMATELY 25" (DEPENDING ON LOCAL SOIL CONDITIONS).
MEDIAN SIGNS: (STAMPED CONC)	SET SIGN POST ANCHOR INTO GROUND APPROXIMATELY 6" BELOW FINISHED SURFACE. TOP OF ANCHOR SHOULD PROTRUDE APPROXIMATELY 5" ABOVE FINISHED SURFACE.
(LANDSCAPED)	DRIVE SIGN POST ANCHOR INTO GROUND APPROXIMATELY 1'-6", LEAVING APPROXIMATELY 5" EXPOSED ABOVE GROUND FOR CONNECTION (RIVETED).
SIGN POST ANCHOR	INSERT SIGN POST AND RIVET IN PLACE WITH TWO (2) 3/8" UNIVERSAL HEAD DRIVE RIVETS, ONE PLACED FACING DIRECTION OF TRAVEL AND ONE FACING THE CURB.
SIGNS	ALL SIGNS SHALL CONFORM TO THE LATEST STATE OF CALIFORNIA MANUAL ON TRAFFIC CONTROL DEVICES (CALIFORNIA MUTCD) SIGN SPECIFICATIONS, CALTRANS STANDARD PLANS AND CALTRANS STANDARD SPECIFICATIONS. SIGN SIZE SHALL BE THE STANDARD SIZE SHOWN IN THE SIGN SPECIFICATIONS UNLESS OTHERWISE SHOWN ON THE PLANS.

APPROVED:

TRANSPORTATION MANAGER

REVISION DATE: 4/14/2016

CITY OF HUNTINGTON BEACH

DEPARTMENT OF PUBLIC WORKS

STREET SIGN ASSEMBLY

STANDARD PLAN 401

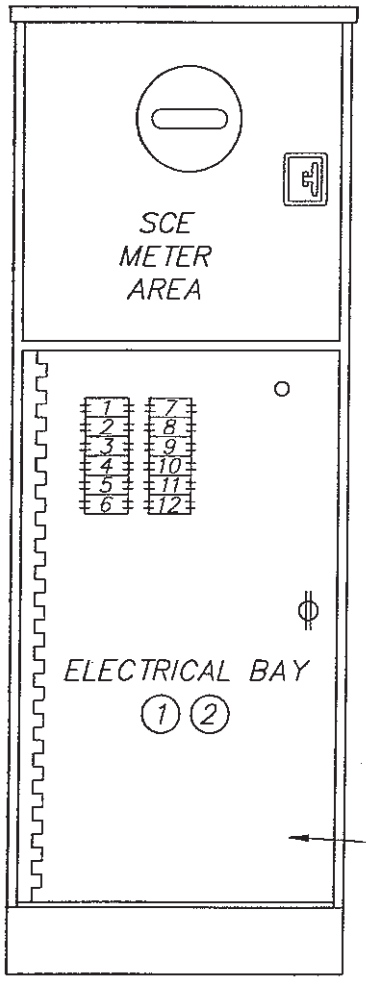

INTERIOR VIEW

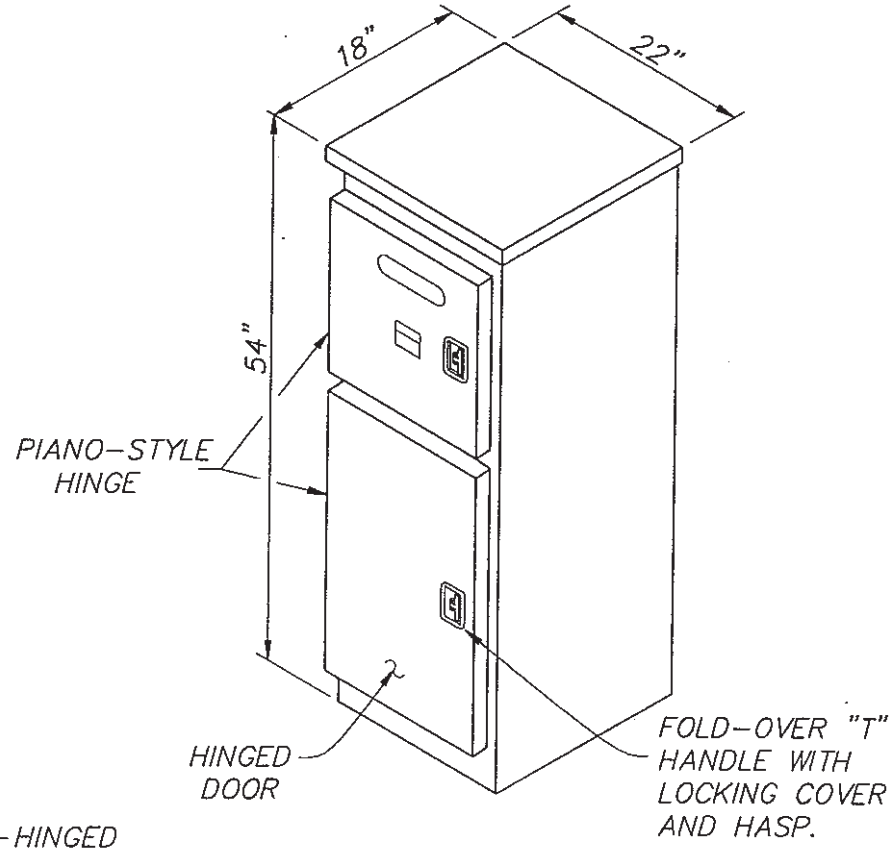

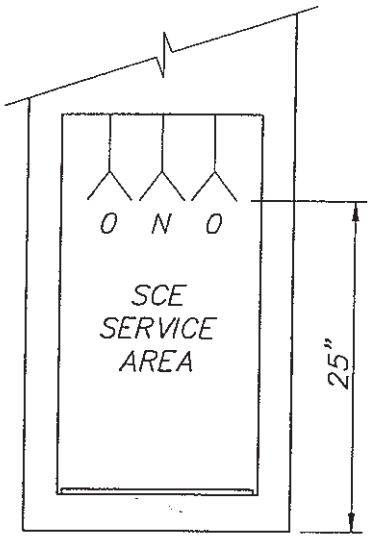

REAR LANDING DETAIL,
COVER REMOVED

NOTES:

1. SEE STD. PLAN 402, SHT. 2 of 6, FOR STREET, PARK AND PARKING LOT LIGHTING ELEC. CIRCUITRY.
2. SEE STD. PLAN 402, SHT. 3 of 6, FOR TRAFFIC SIGNAL AND SAFETY LIGHTING ELEC. CIRCUITRY.

GENERAL NOTES:

1. CITY-OWNED TRAFFIC SIGNAL SERVICE SHALL USE MEYERS ELECTRICAL PRODUCTS CATALOG NO. MEUGI-M125C/TS/WTB.
2. A 5/8" O.D.x10' STAINLESS STEEL GROUND ROD SHALL BE INSTALLED IN THE "CUSTOMER SIDE" OF THE ELECTRICAL BAY.
3. SERVICE PEDESTAL FOUNDATION SHALL CONFORM TO CALTRANS STD. PLAN ES-2E (JULY, 1992 ED.).

APPROVED: DATE: March 15, 1994

TRAFFIC ENGINEER

REVISION DATE: March 1994

CITY OF HUNTINGTON BEACH

DEPARTMENT OF PUBLIC WORKS

SINGLE METER UNDERGROUND SERVICE PEDESTAL

STANDARD PLAN 402

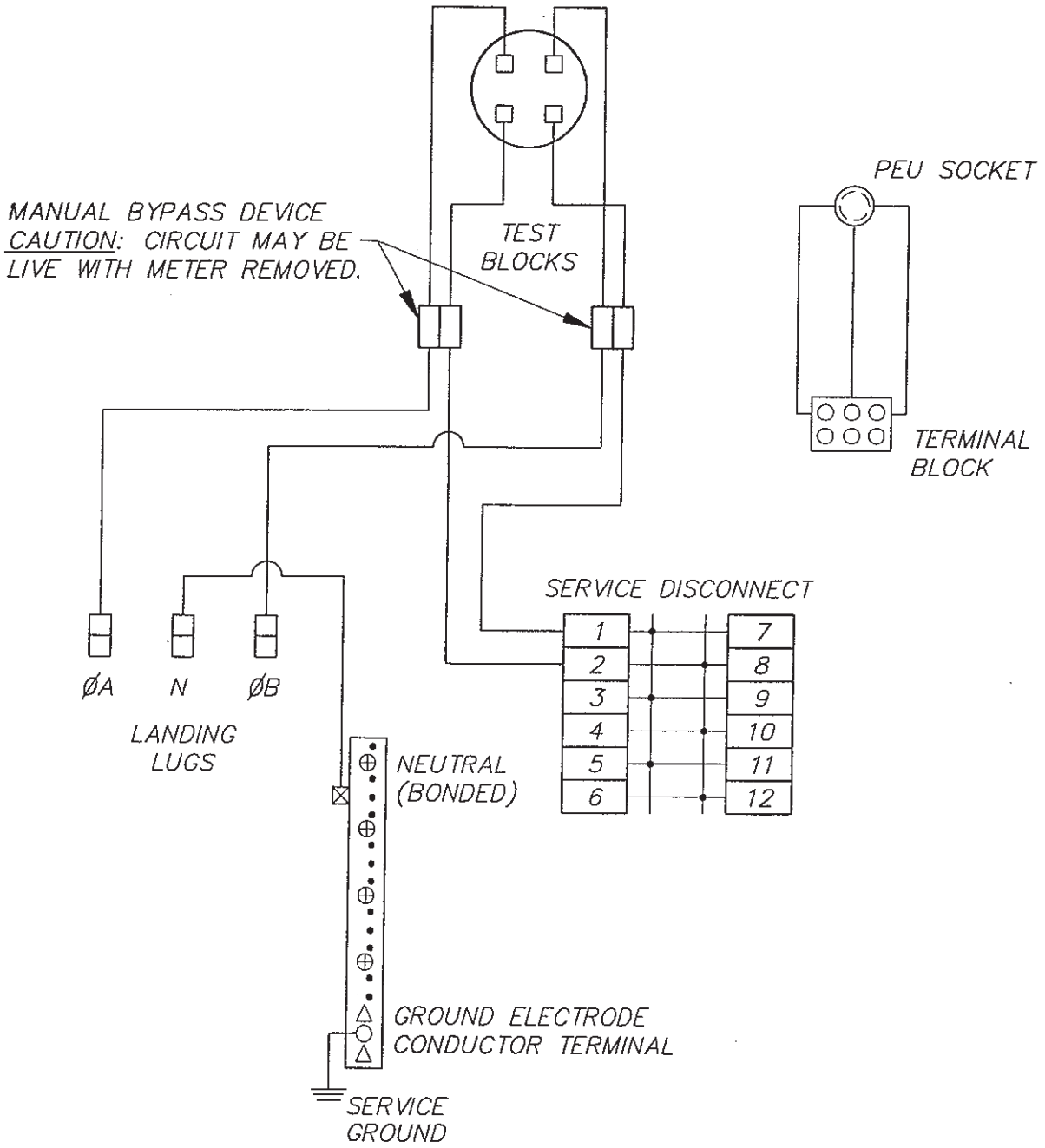

GENERAL NOTES:

1. SERVICE PEDESTAL SHALL INCLUDE A TYPE V PHOTO-ELECTRIC CONTROL UNIT PER SECTION 86-6.07A OF THE JULY, 1992 CALTRANS STD. SPECIFICATIONS.
2. INTERMEDIATE HANDLE TRIP POSITION TO RESTORE POWER TURN TO FULL OFF THEN ON.

STREET, PARK AND PARKING LOT LIGHTING

CATALOGUE NO.: MEUGI-M100C/WTB

APPROVED: DATE: March 15, 1994

TRAFFIC ENGINEER

REVISION DATE: March 1994

CITY OF HUNTINGTON BEACH

DEPARTMENT OF PUBLIC WORKS

SINGLE METER UNDERGROUND SERVICE PEDESTAL ELEC. CIRCUITRY

STANDARD PLAN 402

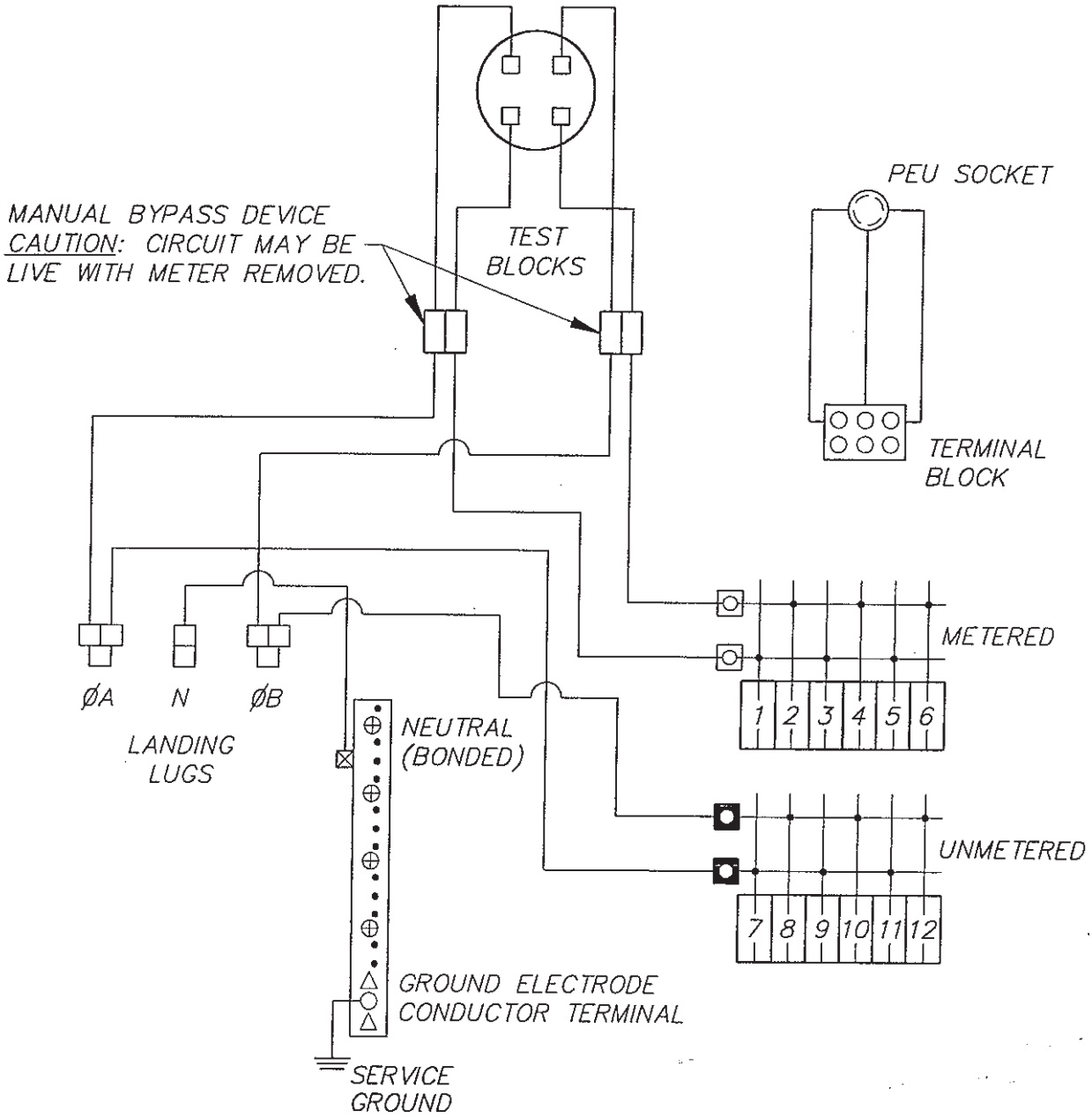

GENERAL NOTES:

1. SERVICE PEDESTAL SHALL INCLUDE A TYPE V PHOTO-ELECTRIC CONTROL UNIT PER SECTION 86-6.07A OF THE JULY, 1992 CALTRANS STD. SPECIFICATIONS.
2. INTERMEDIATE HANDLE TRIP POSITION TO RESTORE POWER TURN TO FULL OFF THEN ON.
3. METERED SECTION SUPPLIED WITH 100 AMP MAIN.
4. SIGNAL BREAKER SHALL BE SINGLE POLE 50 AMP.
5. SHALL HAVE 30 AMP 2 POLE LIGHTING CONTACTOR CONNECTED FOR SAFETY LIGHT.
6. TEST SWITCH SHALL BE INSTALLED & WIRED FOR BYPASS TO TEST SAFETY LIGHTS.
7. 1 EACH 30 AMP SINGLE POLE BREAKER ON UNMETERED BUSS FOR SAFETY LIGHTS.

TRAFFIC SIGNAL AND SAFETY LIGHTING

CATALOGUE NO.: MEUGI-M125C/TS/WTB

APPROVED: DATE: March 15, 1994

TRAFFIC ENGINEER

REVISION DATE: March 1994

CITY OF HUNTINGTON BEACH

DEPARTMENT OF PUBLIC WORKS

SINGLE METER UNDERGROUND SERVICE PEDESTAL ELEC. CIRCUITRY

STANDARD PLAN 402

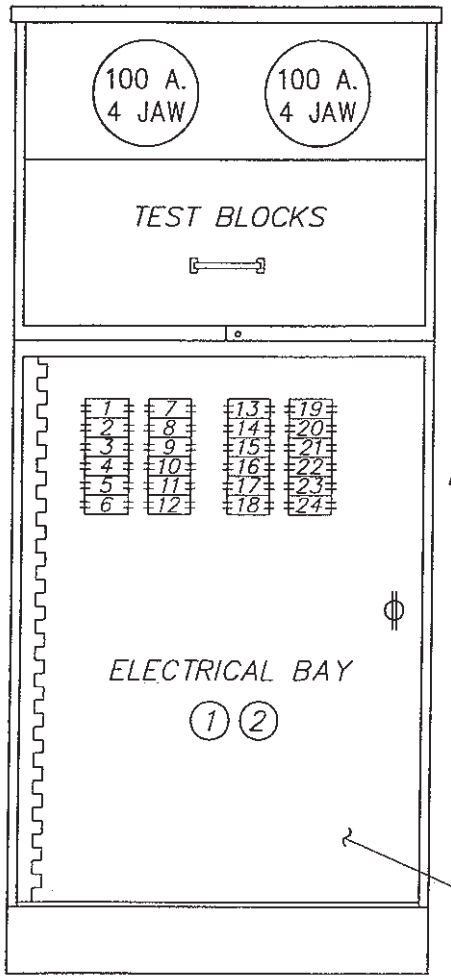

INTERIOR VIEW

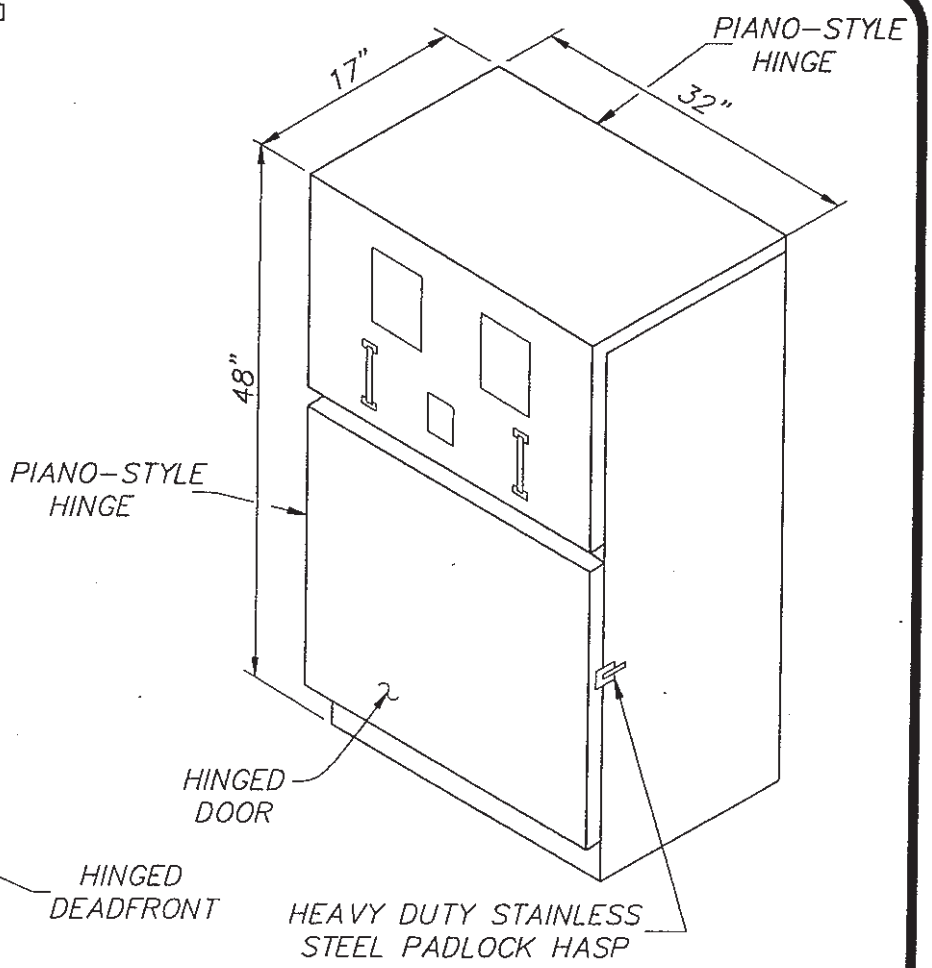

NOTES:

1. SEE STD. PLAN 402, SHT. 5 of 6, FOR STREET LIGHTING AND ELECTRICAL POWER ELEC. CIRCUITRY.
2. SEE STD. PLAN 402, SHT. 6 of 6, FOR TRAFFIC SIGNAL, SAFETY AND STREET LIGHTING ELEC. CIRCUITRY.

GENERAL NOTES:

1. CITY-OWNED STREET LIGHTING, PARK LIGHTING OR PARKING LOT LIGHTING SERVICE SHALL USE MEYERS ELECTRIC PRODUCTS CATALOG NO. MEUGSD-M100/M100W/TB-SCE.
2. A 5/8" O.D.x10' STAINLESS STEEL GROUND ROD SHALL BE INSTALLED IN THE "CUSTOMER SIDE" OF THE ELECTRICAL BAY.
3. SERVICE PEDESTAL FOUNDATION SHALL CONFORM TO CALTRANS STD. PLAN ES-2E (JULY, 1992 ED.).

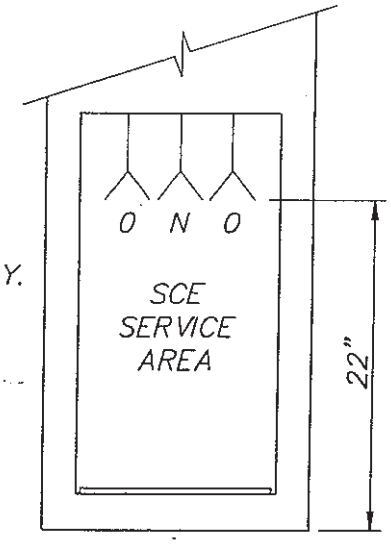

REAR LANDING DETAIL,
COVER REMOVED

APPROVED: DATE: March 15, 1994

TRAFFIC ENGINEER

REVISION DATE: March 1994

CITY OF HUNTINGTON BEACH

DEPARTMENT OF PUBLIC WORKS

DUAL METER UNDERGROUND SERVICE PEDESTAL

STANDARD PLAN 402

4 of 6

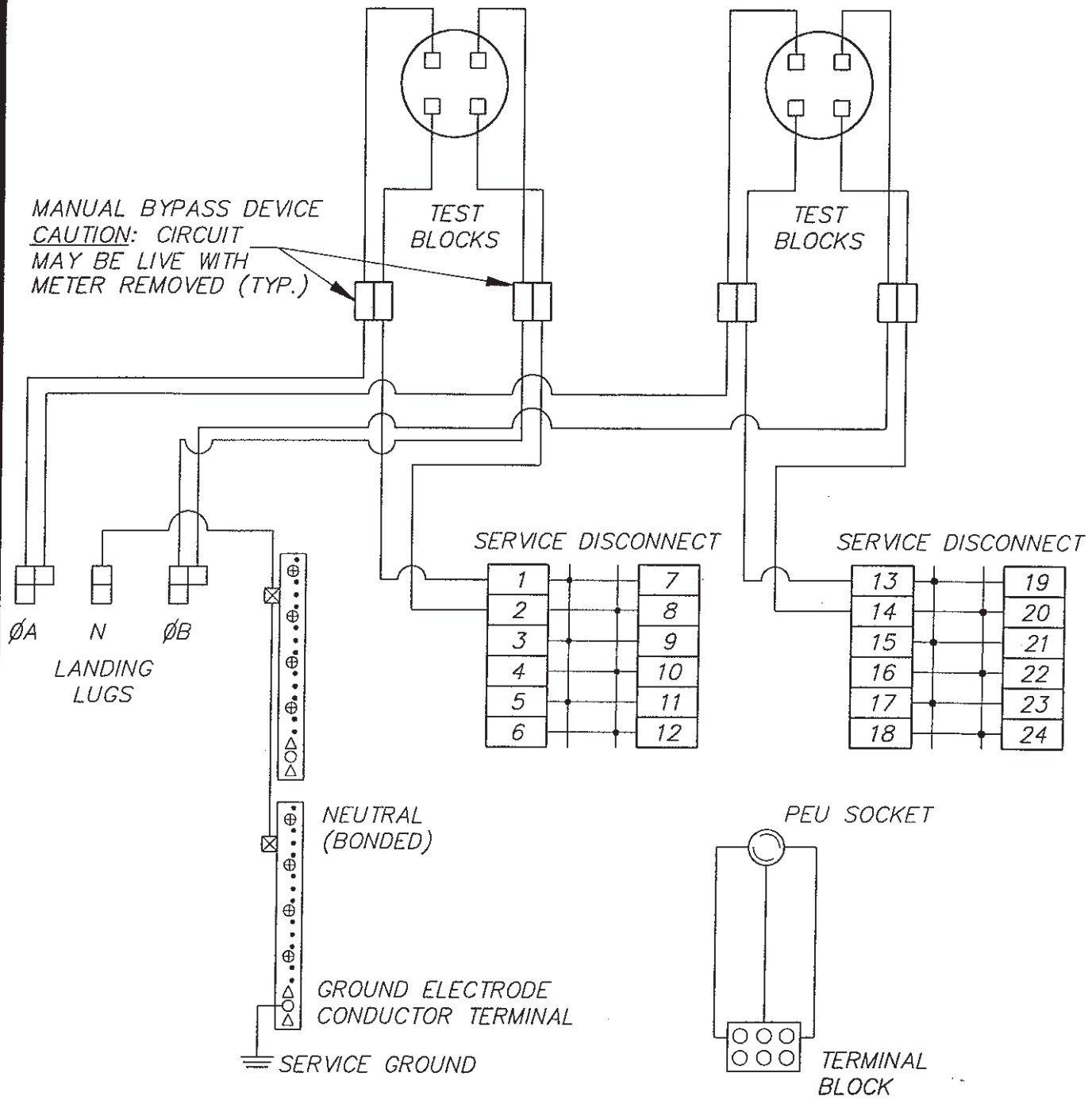

GENERAL NOTES:

1. SERVICE PEDESTAL SHALL INCLUDE A TYPE V PHOTO-ELECTRIC CONTROL UNIT PER SECTION 86-6.07A OF THE JULY, 1992 CALTRANS STD. SPECIFICATIONS.
2. INTERMEDIATE HANDLE TRIP POSITION TO RESTORE POWER TURN TO FULL OFF THEN ON.

STREET LIGHTING AND ELECTRICAL POWER

CATALOGUE NO.: MEUGSD-M100/M100W/TB-SCE

APPROVED: DATE: March 15, 1994

TRAFFIC ENGINEER

REVISION DATE: March 1994

CITY OF HUNTINGTON BEACH

DEPARTMENT OF PUBLIC WORKS

DUAL METER UNDERGROUND SERVICE PEDESTAL ELEC. CIRCUITRY

STANDARD PLAN 402

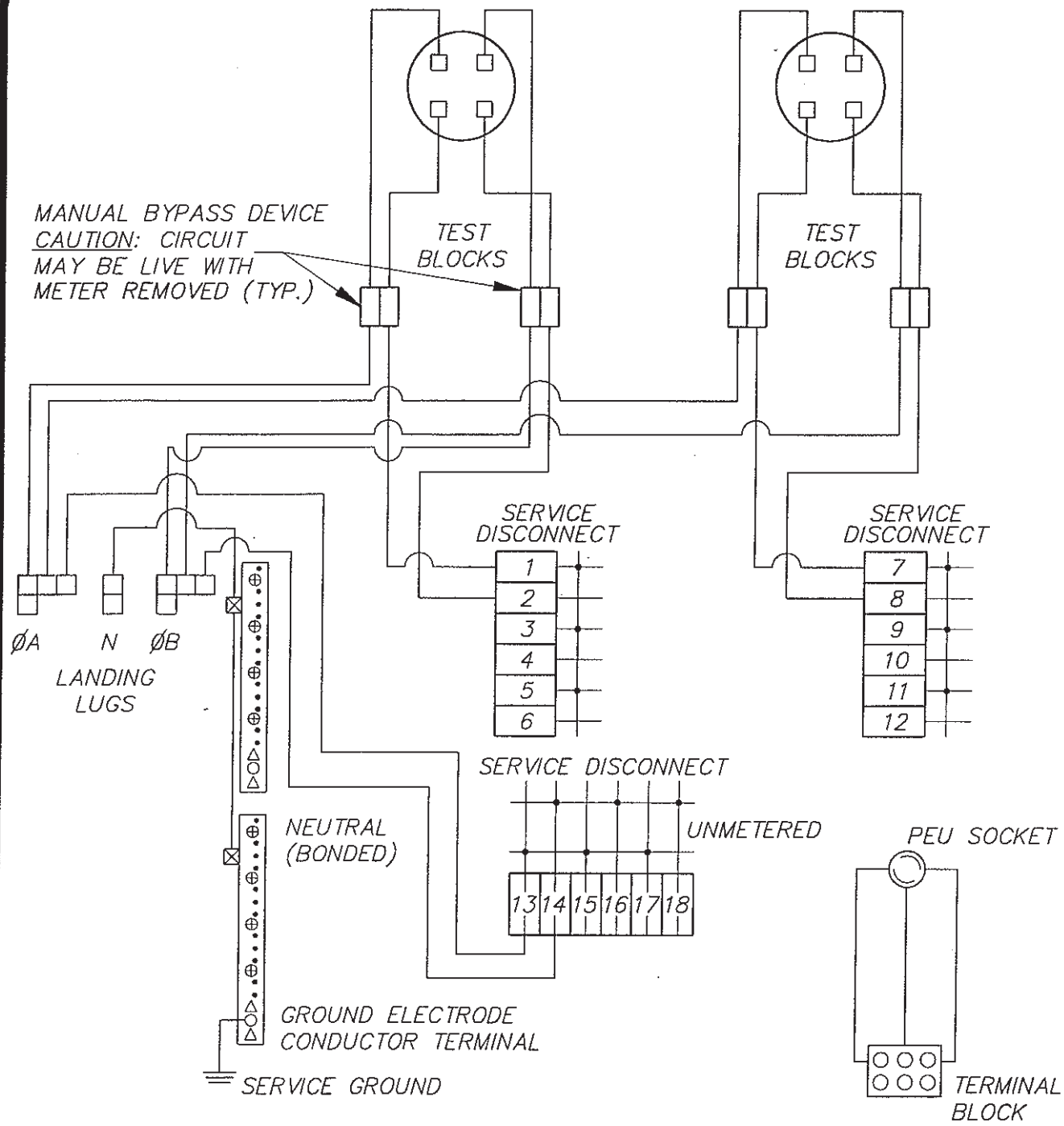

GENERAL NOTES:

1. SERVICE PEDESTAL SHALL INCLUDE A TYPE V PHOTO-ELECTRIC CONTROL UNIT PER SECTION 86-6.07A OF THE JULY, 1992 CALTRANS STD. SPECIFICATIONS.
2. INTERMEDIATE HANDLE TRIP POSITION TO RESTORE POWER TURN TO FULL OFF THEN ON.

TRAFFIC SIGNAL, SAFETY AND STREET LIGHTING

CATALOGUE NO.: MUEGSD-M100/M100W/TB-SCE-MOD

APPROVED: DATE: March 15, 1994

TRAFFIC ENGINEER

REVISION DATE: March 1994

CITY OF HUNTINGTON BEACH

DEPARTMENT OF PUBLIC WORKS

DUAL METER UNDERGROUND SERVICE PEDESTAL ELEC. CIRCUITRY

STANDARD PLAN 402

6 of 6

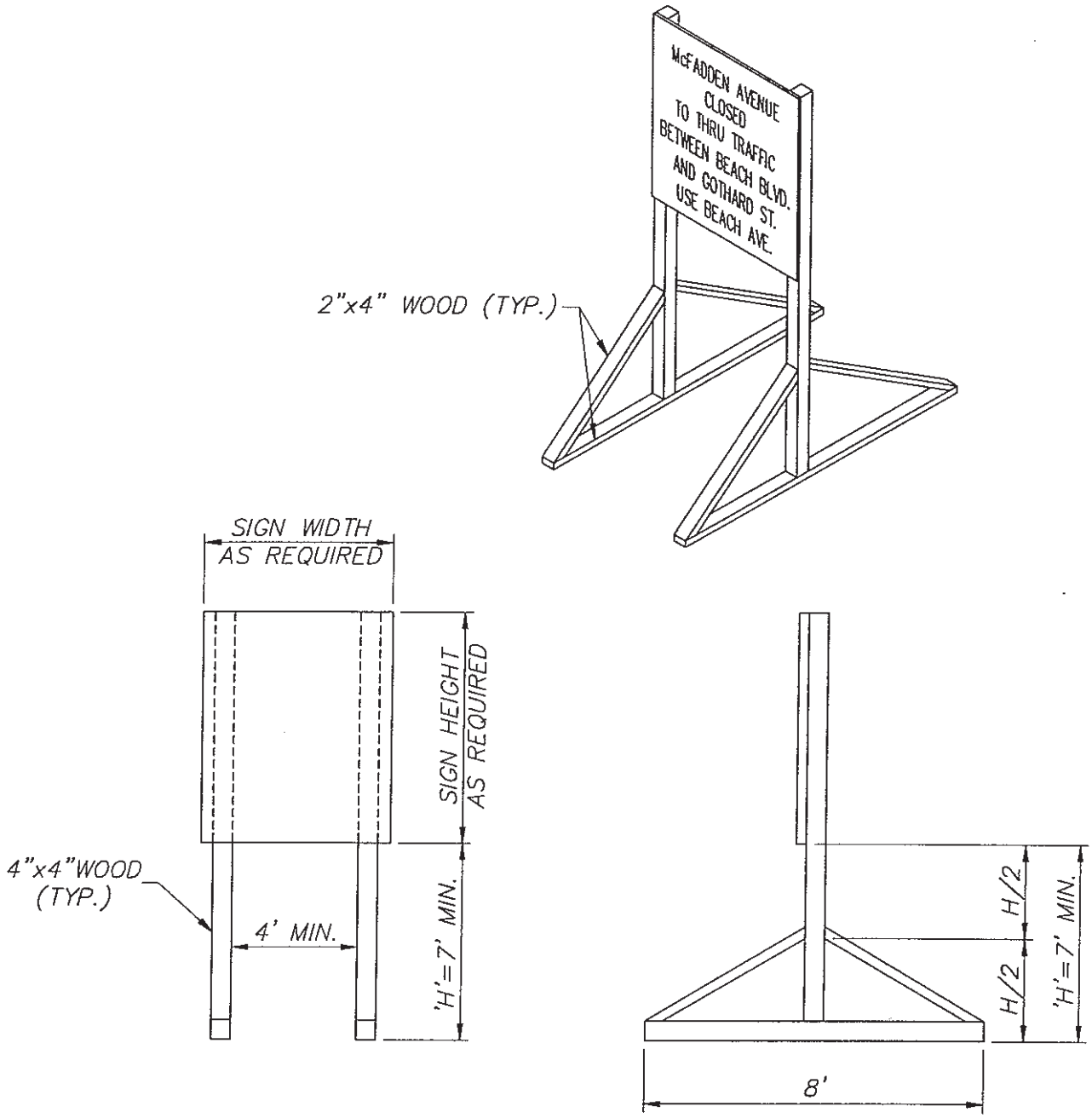

GENERAL NOTES:

1. SANDBAGS SHALL BE APPLIED TO TRESTLE BASE FOR WIND STABILIZATION.

APPROVED: DATE: March 15, 1994

TRAFFIC ENGINEER

REVISION DATE: March 1994

CITY OF HUNTINGTON BEACH

DEPARTMENT OF PUBLIC WORKS

TEMPORARY SIGN
TRESTLE DETAIL

STANDARD PLAN
403

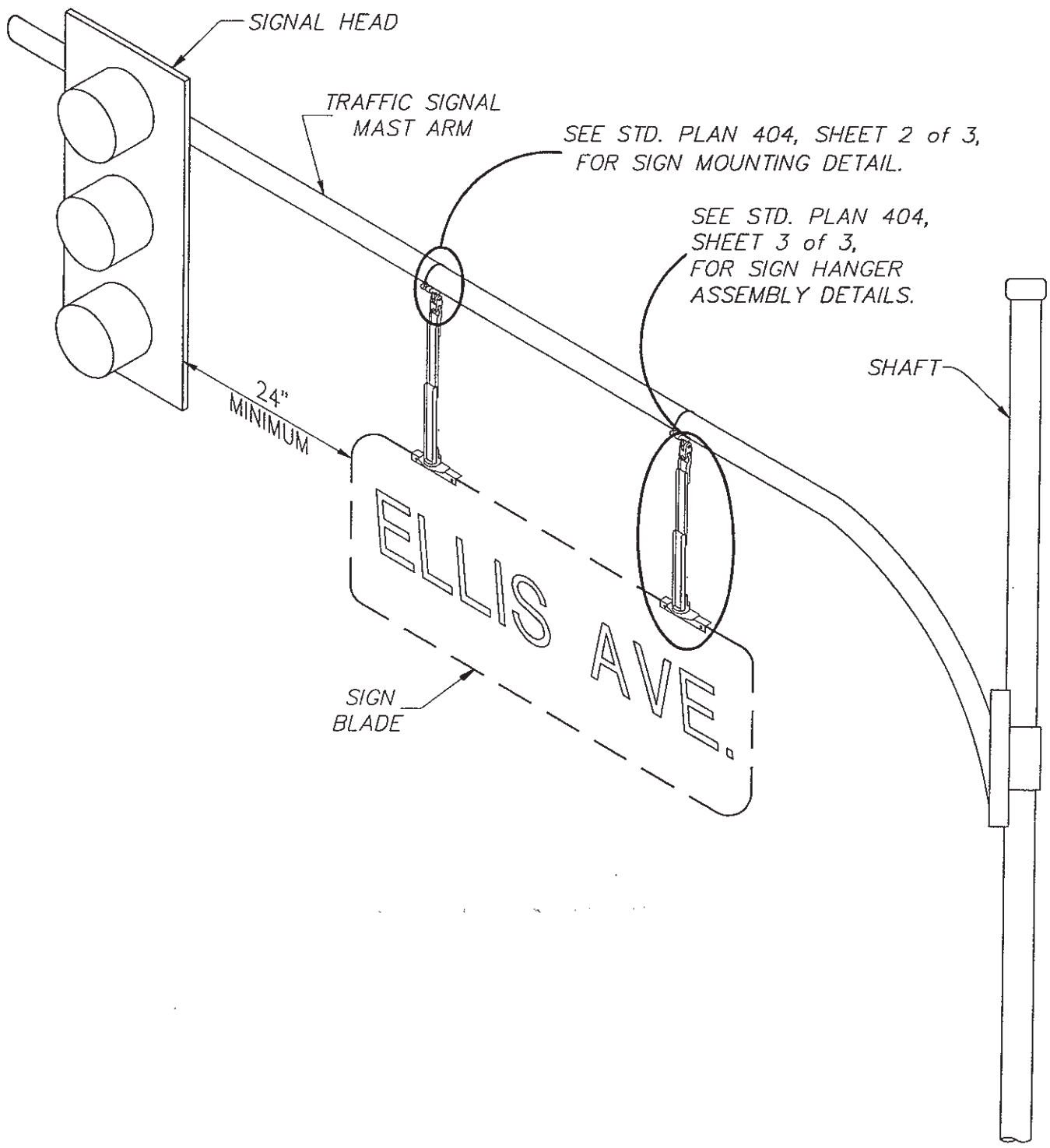

GENERAL NOTES:

1. MASTARM STREET NAME SIGN SHALL CONFORM TO THE CURRENT CITY OF HUNTINGTON BEACH STANDARD SPECIAL PROVISIONS FOR TRAFFIC SIGNAL AND STREET LIGHTING CONSTRUCTION.

APPROVED: DATE: March 15, 1994

TRAFFIC ENGINEER

REVISION DATE: March 1994

CITY OF HUNTINGTON BEACH

DEPARTMENT OF PUBLIC WORKS

NON-ILLUMINATED STREET NAME SIGN

STANDARD PLAN 404

1 of 3

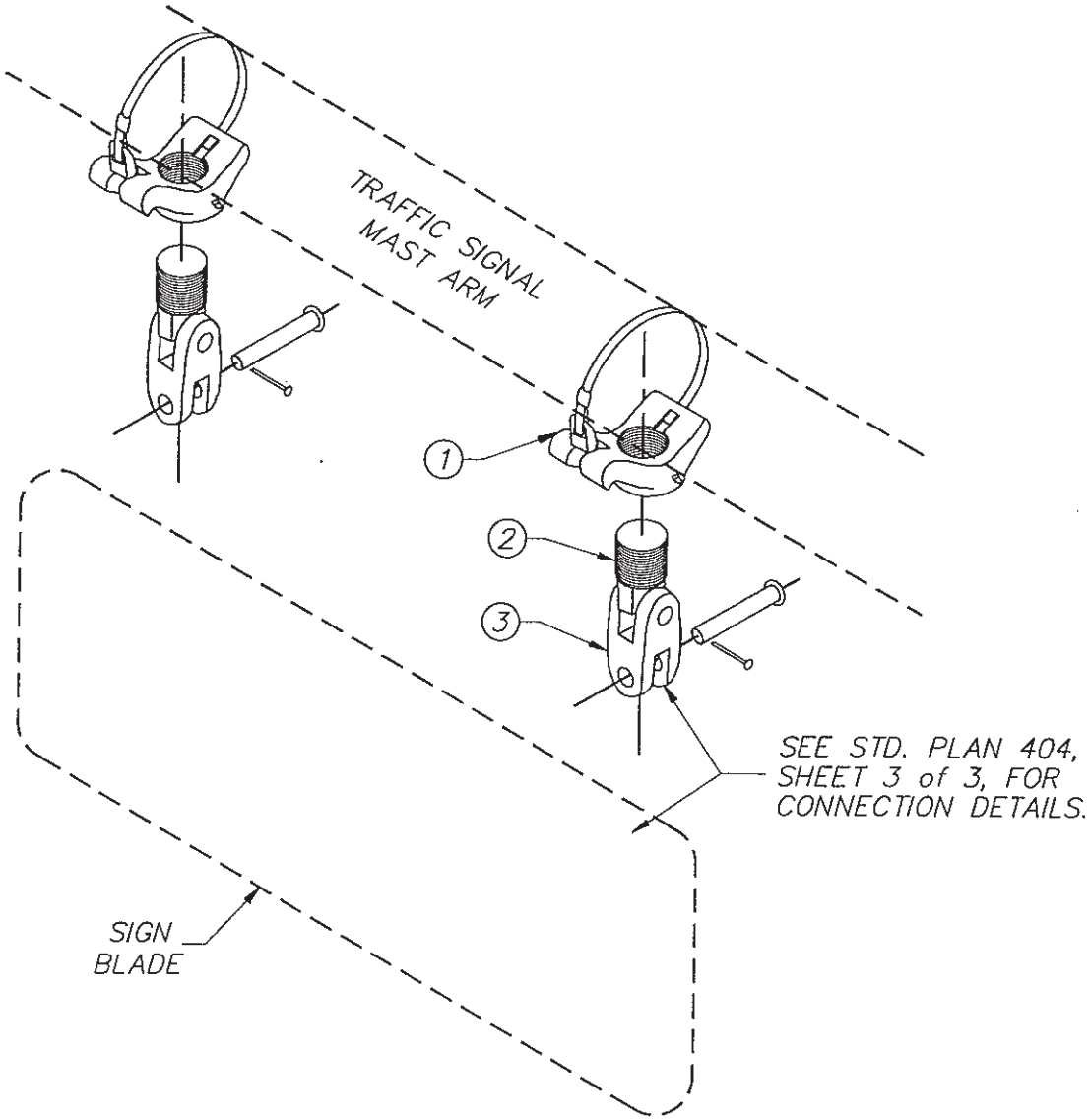

FREE SWINGING MAST ARM SIGN BRACKET ASSEMBLY

GENERAL NOTES:

1. SEE STD. PLAN 404, SHEET 1 of 3, FOR SIGN MOUNTING POSITIONING.

ITEM	PELCO PART NO.	DESCRIPTION	COAT	QTY.
	SP-5165-L	FREE SWINGING MAST ARM SIGN BRACKET ASSEMBLY		1
1	AB-0121-L	ASTRO-MINI-BRACKET (-L=BAND HEIGHT)	A	2
2	SE-0371	SPAN WIRE ADAPTER WITH INSERT	A	2
3	SE-0454	CLEVIS-CLEVIS, 1/2"x1/2" WITH PINS	A	2
4	SE-5043-A	SIGN HANGER ASSEMBLY (SEE STD. PLAN 404, SHT. 3 of 3)		1
5	SE-5046-A	ADJUSTABLE SIGN HANGER ASSY. (SEE STD. PLAN 404, SHT. 3 of 3)		1

APPROVED: DATE: March 15, 1994

TRAFFIC ENGINEER

REVISION DATE: March 1994

CITY OF HUNTINGTON BEACH

DEPARTMENT OF PUBLIC WORKS

NON-ILLUMINATED
STREET NAME SIGN

STANDARD PLAN
404
2 of 3

STANDARD DIMENSIONS		
'W' SIGN	'L' ANGLE	'A' HOLE (CENTER TO CENTER)
18"	15"	13"
24"	21"	19"
30"	27"	25"
36"	33"	31"
42"	39"	37"

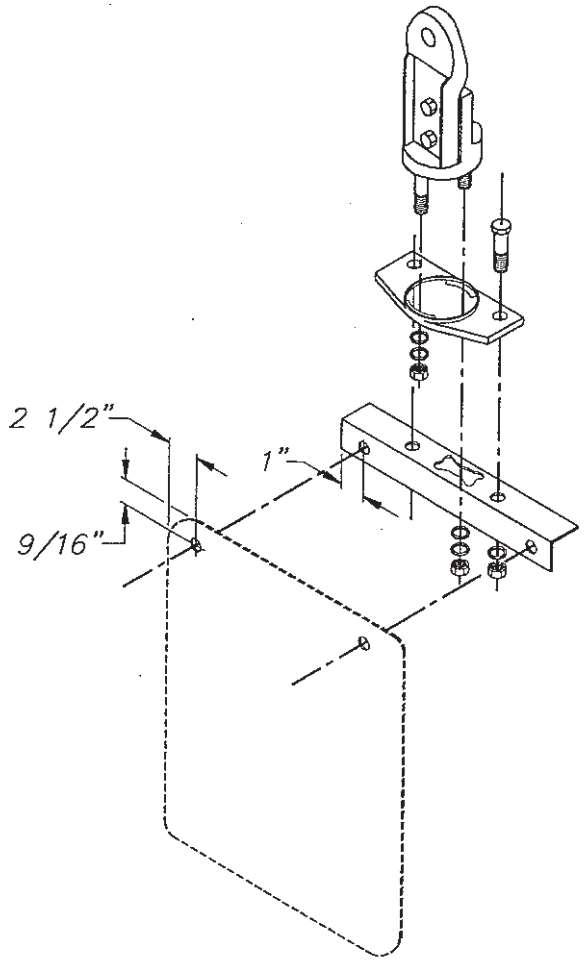

(4) SIGN HANGER ASSEMBLY, SE-5043-A

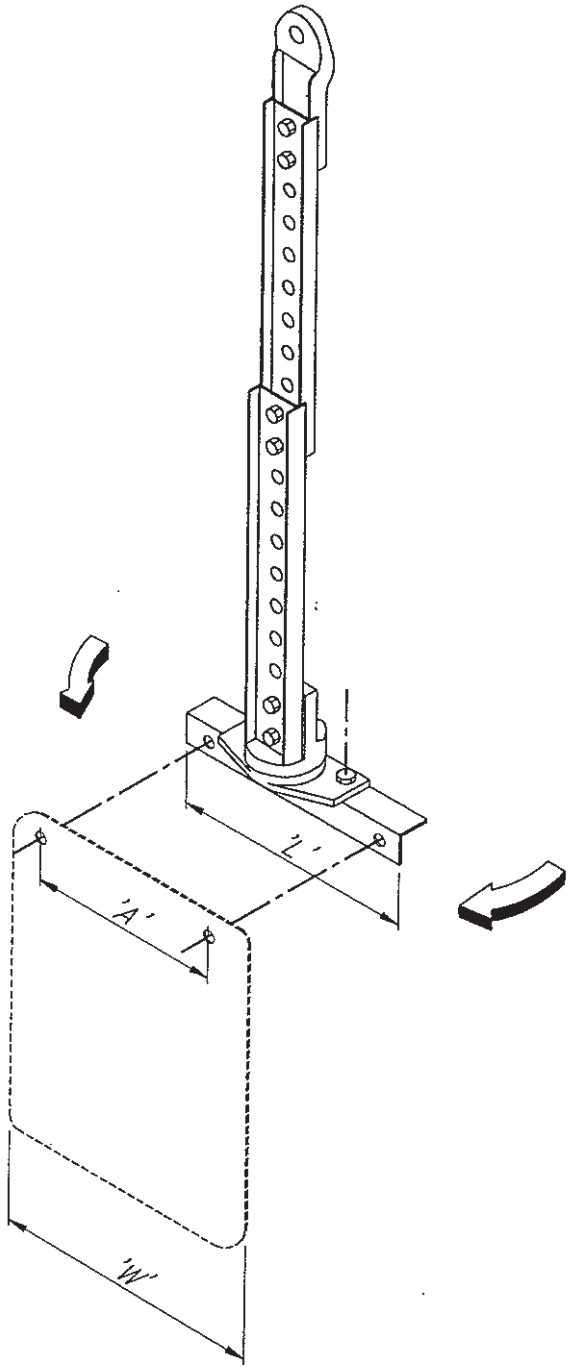

(5) ADJUSTABLE SIGN HANGER ASSY., SE-5046-A

GENERAL NOTES:

1. ONE EACH SIGN HANGER ASSEMBLY ((4)&(5)) ARE REQUIRED PER SIGN INSTALLATION.

APPROVED: DATE: March 15, 1994

TRAFFIC ENGINEER

REVISION DATE: March 1994

CITY OF HUNTINGTON BEACH

DEPARTMENT OF PUBLIC WORKS

NON-ILLUMINATED STREET NAME SIGN

STANDARD PLAN 404

3 of 3

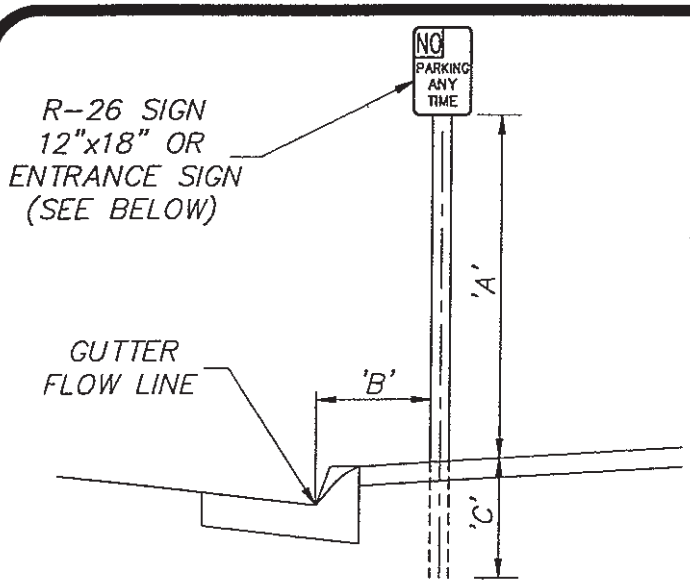

'A' = 7' IN SIDEWALK OR PEDESTRIAN AREAS 5' IN ALL OTHER AREAS.
'B' = 30" WITH STANDARD CURB, 24" WITH ROLLED CURB, TO CENTER OF POST.
'C' = 24" MINIMUM EMBEDMENT.

POST MOUNTED SIGN INSTALLATION

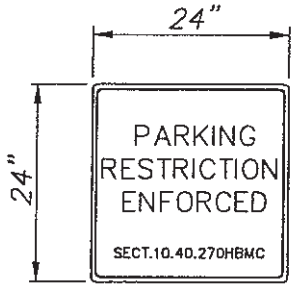

ENTRANCE SIGN

(AVAILABLE FROM PUBLIC WORKS)
REQUIRED AT ALL POINTS OF ENTRY INTO PRIVATE PROPERTY

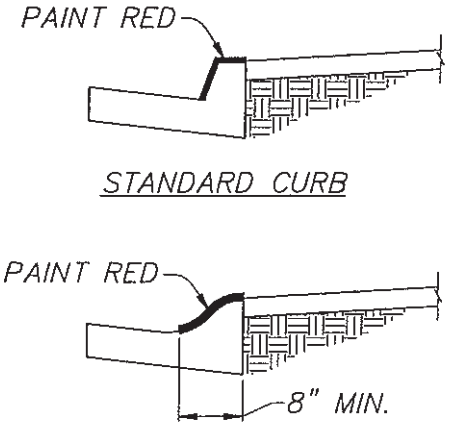

RED CURB INSTALLATION

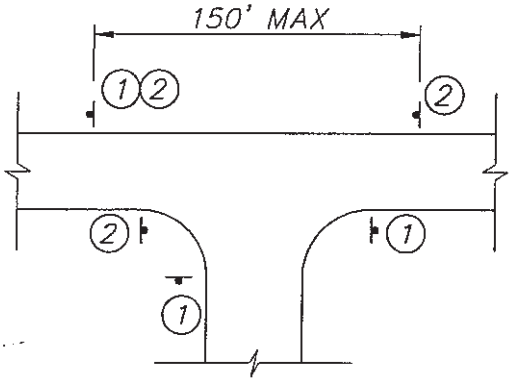

NOTES:

1. ENTRANCE SIGN
2. R26 SIGN

GENERAL NOTES:

1. SIGNS MAY BE MOUNTED ON EXISTING POSTS OR BUILDINGS (TO BE DETERMINED BY TRAFFIC ENGINEERING DIVISION) SIGN SPACING SHALL NOT EXCEED 100'.
2. SIGNS SHALL BE INSTALLED AT 90° TO CENTERLINE OF ROAD.
3. HBMC REQUIRES "NO PARKING SIGN" AND RED CURB INSTALLATION.

APPROVED: DATE: March 15, 1994

TRAFFIC ENGINEER

REVISION DATE: March 1994

CITY OF HUNTINGTON BEACH

DEPARTMENT OF PUBLIC WORKS

PARKING RESTRICTIONS ON PRIVATE PROPERTY

STANDARD PLAN 405

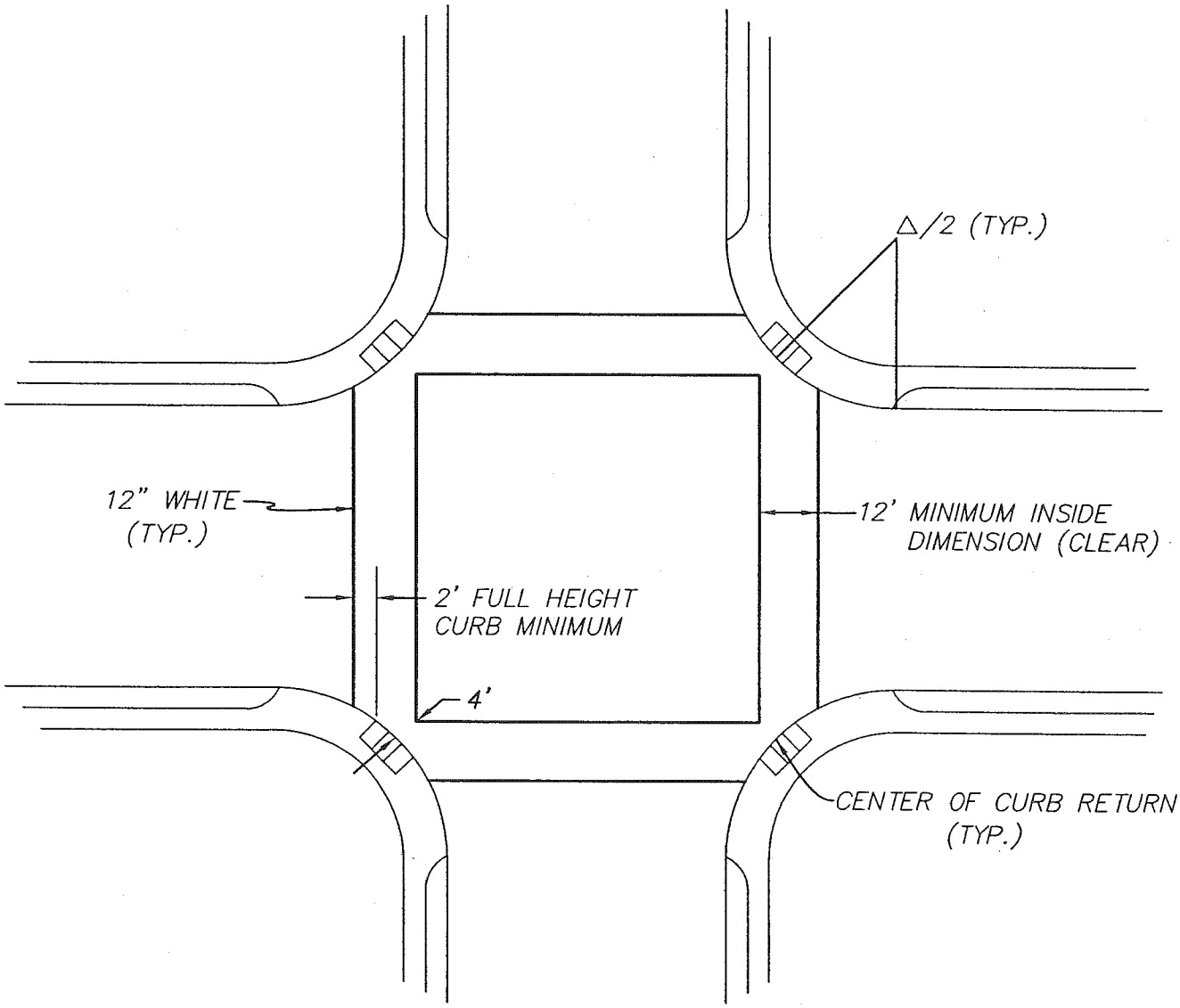

GENERAL NOTES:

1. CROSSWALKS SHALL BE INSTALLED PER STRIPING PLAN.
2. SCHOOL CROSSWALKS (AS SHOWN ON STRIPING PLAN) SHALL BE PAINTED YELLOW.
3. CROSSWALKS SHALL BE THERMOPLASTIC, APPLIED TO THE ROAD AS PER CALTRANS STANDARD SPECIFICATIONS, SECTION 84-3.01, MAY 2006, EDITION.
4. CROSSWALKS SHALL COMPLY WITH ALL REQUIREMENTS OF THE AMERICANS WITH. DISABILITIES ACT.
5. FINAL APPROVAL FOR CROSSWALK LOCATIONS SHALL BE BY THE TRANSPORTATION MANAGER OR HIS DESIGNEE.

APPROVED:

TRANSPORTATION MANAGER

REVISION DATE: 6/23/08

CITY OF HUNTINGTON BEACH

DEPARTMENT OF PUBLIC WORKS

TYPICAL CROSSWALK INSTALLATION

STANDARD PLAN 406

1 of 1

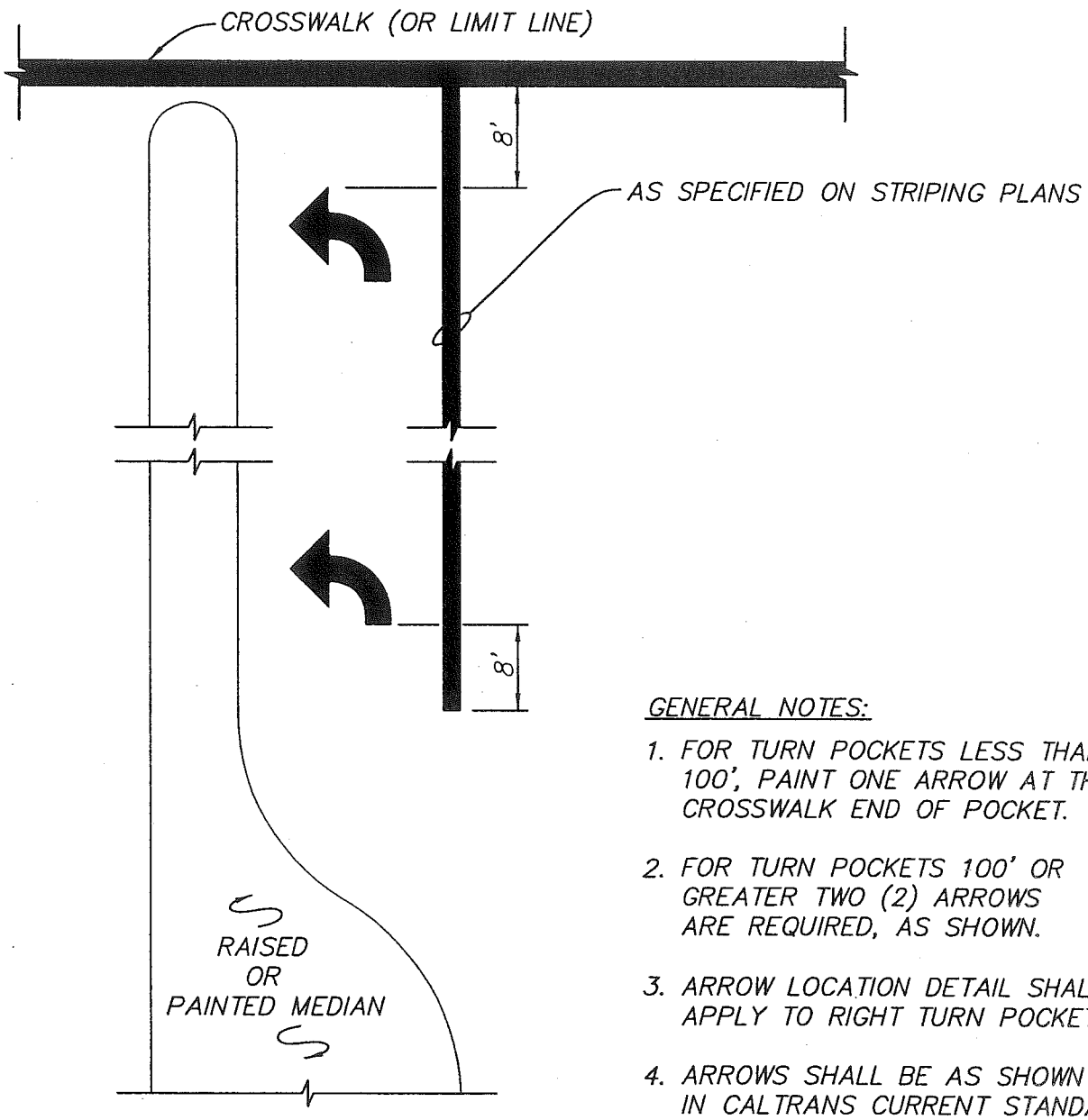

TURN LANE ARROWS

GENERAL NOTES:

1. FOR TURN POCKETS LESS THAN 100', PAINT ONE ARROW AT THE CROSSWALK END OF POCKET.
2. FOR TURN POCKETS 100' OR GREATER TWO (2) ARROWS ARE REQUIRED, AS SHOWN.
3. ARROW LOCATION DETAIL SHALL ALSO APPLY TO RIGHT TURN POCKETS.
4. ARROWS SHALL BE AS SHOWN IN CALTRANS CURRENT STANDARD PLAN NO. A24B, TYPE IV, RIGHT OR LEFT, AS APPROPRIATE.

NOTE: ALL LETTERS, NUMBERS AND SYMBOLS SHALL CONFORM TO THE FEDERAL HIGHWAY ADMINISTRATION SPECIFICATIONS.

APPROVED:

TRANSPORTATION MANAGER

REVISION DATE: 6/23/08

CITY OF HUNTINGTON BEACH

DEPARTMENT OF PUBLIC WORKS

TYPICAL TURN LANE MARKING DETAILS

STANDARD PLAN 407

1 of 1

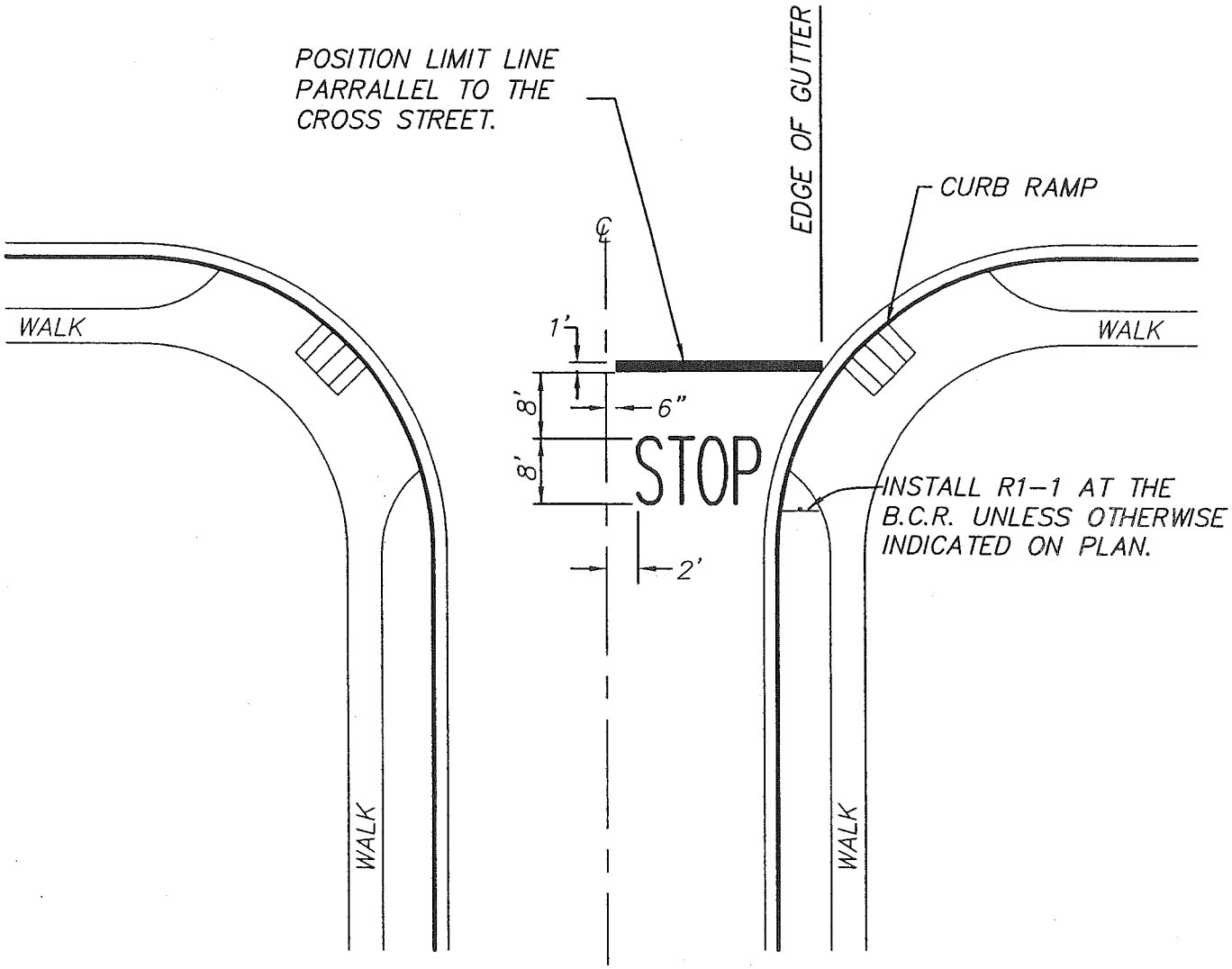

NOTE: ALL LETTERS, NUMBERS AND SYMBOLS SHALL CONFORM TO THE. FEDERAL HIGHWAY ADMINISTRATION SPECIFICATIONS.

APPROVED:

TRANSPORTATION MANAGER

REVISION DATE: 6/23/08

CITY OF HUNTINGTON BEACH

DEPARTMENT OF PUBLIC WORKS

TYPICAL "STOP" LEGEND AND LIMIT LINE PLACEMENT

STANDARD PLAN 408

1 of 1

PAVEMENT SYMBOLS, ARROWS AND CALTRANS DETAIL 39 SHALL BE THERMOPLASTIC, UNLESS OTHERWISE SPECIFIED.

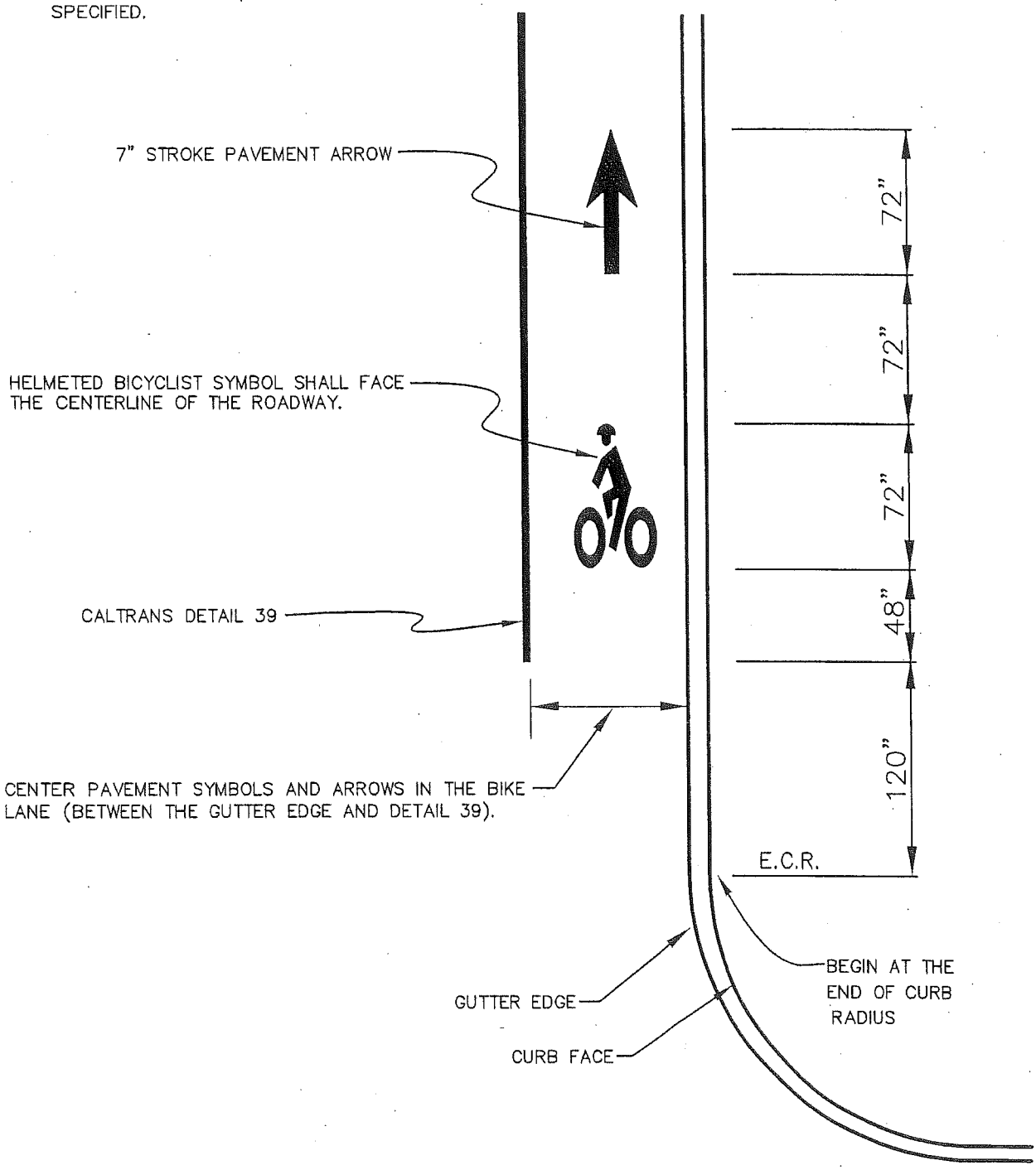

SEE DETAIL 9C-3 (B – HELMETED BICYCLIST SYMBOL) IN THE CALIFORNIA MUTCD 2014 EDITION (BOTH THE PAVEMENT ARROW AND THE HELMETED BICYCLIST SYMBOL ARE REQUIRED).

APPROVED:

TRANSPORTATION MANAGER

REVISION DATE: 4/14/2016

CITY OF HUNTINGTON BEACH

DEPARTMENT OF PUBLIC WORKS

BIKE LANE LEGEND

STANDARD PLAN 409

1 of 1

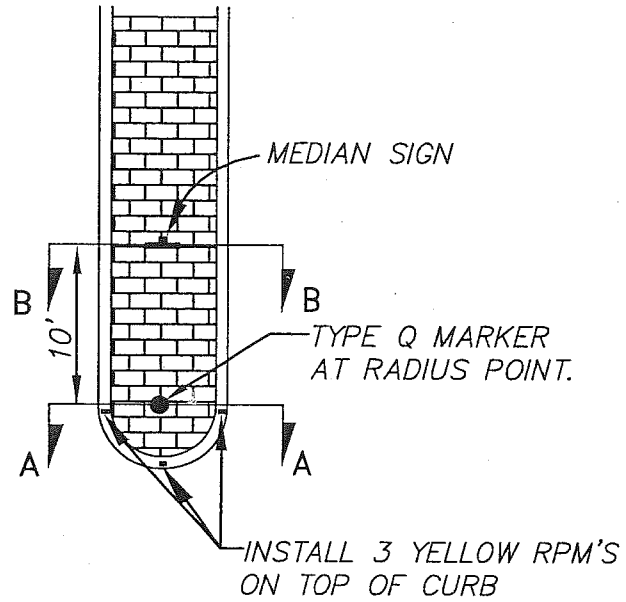

PLAN

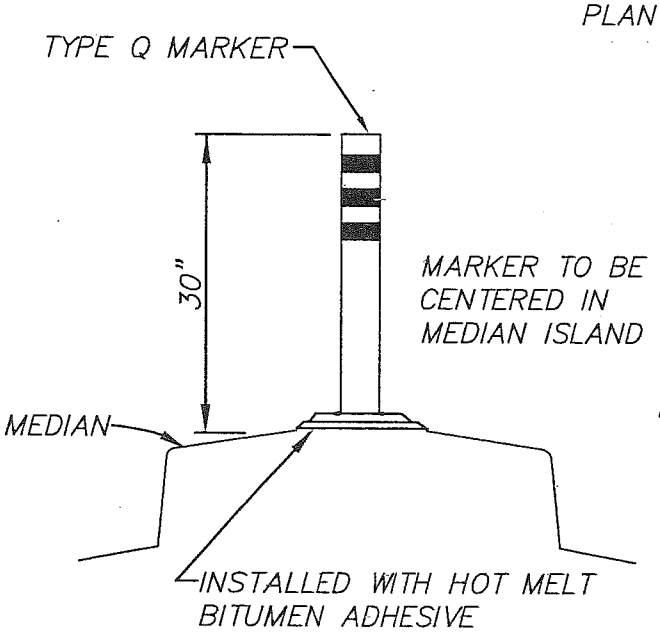

SECTION A–A

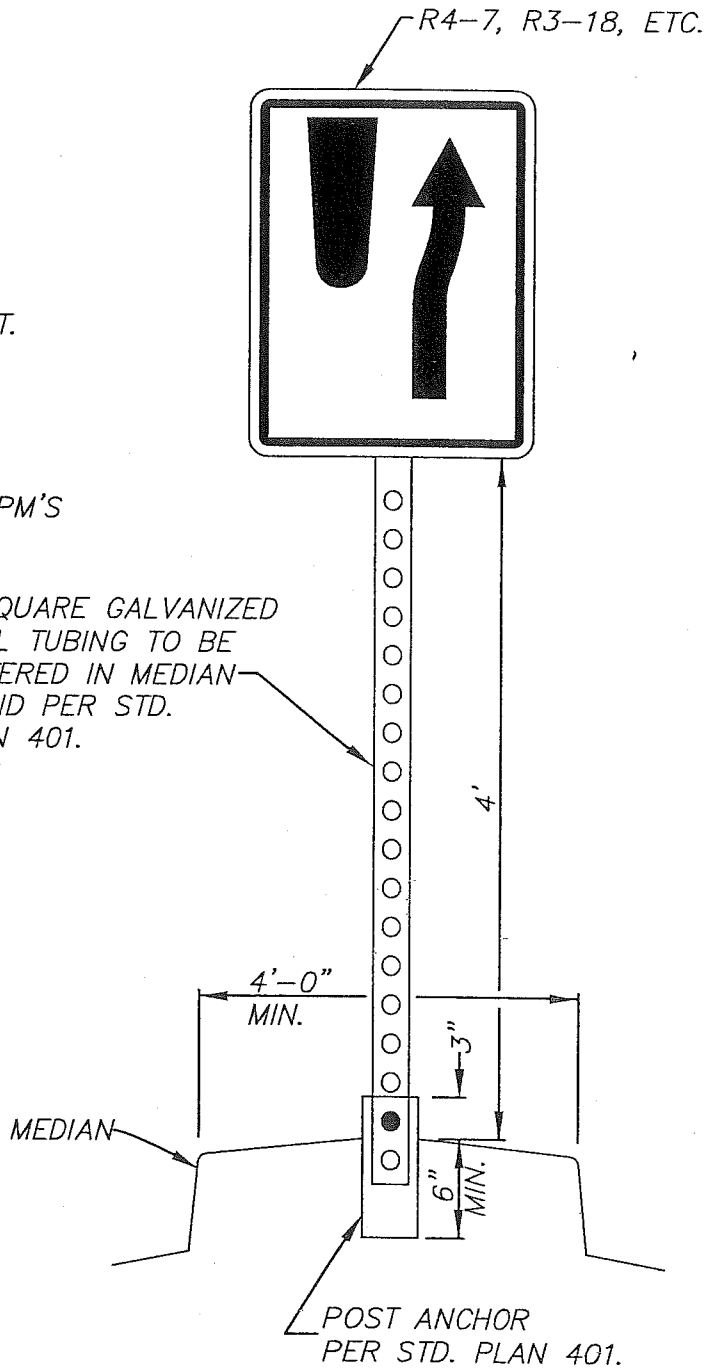

SECTION B–B

APPROVED:

TRANSPORTATION MANAGER

REVISION DATE: 11/4/2015

CITY OF HUNTINGTON BEACH

DEPARTMENT OF PUBLIC WORKS

TYPE Q AND R7 INSTALLATION

STANDARD PLAN
410
1 of 1

ANY NEW STREET LIGHTING OR MODIFICATIONS TO EXISTING CITY-OWNED AND EDISON OWNED STREET LIGHTS MUST CONFORM TO GENERAL SPECIFICATIONS LISTED HERE AND TO THE CITY OF HUNTINGTON BEACH STANDARD SPECIAL PROVISIONS FOR THE CONSTRUCTION OF TRAFFIC SIGNALS AND STREET LIGHTING SYSTEMS, CURRENT EDITION.

CITY-OWNED STREET LIGHTS

GRADING PLANS OR STREET IMPROVEMENT PLANS MUST SHOW EXISTING AND NON-AFFECTED STREET LIGHTS, (ON EACH SIDE OF THE PARCEL(S) AND ON BOTH SIDES OF THE STREET). THE INFORMATION SHALL CONTAIN STREET LIGHT POLE STATIONING, LUMINAIRE MOUNTING HEIGHT, MAST ARM LENGTH, AND LAMP WATTAGE OR LUMEN OUTPUT, PULL BOXES, AND CONDUIT.

1. RELOCATION OF EXISTING CITY-OWNED STREET LIGHT(S) SHALL INCLUDE INSTALLATION OF NEW CONDUIT, PULL BOXES, AND WIRING BETWEEN THE NEAREST NON-AFFECTED STREET LIGHTS.
2. CONDUIT SHALL BE 2" SCHEDULE 40 P.V.C., INSTALLED UNDER THE SIDEWALK. CONDUIT DEPTH SHALL BE AT A MINIMUM OF 24".
3. RELOCATED AND NEW STREET LIGHTS WITHOUT SUFFICIENT SPACE WITHIN THE POLE BASE TO ACCEPT INCOMING CONDUITS SHALL HAVE A NO. 5 PULL BOX INSTALLED DOWNSTREAM (IN THE DIRECTION OF TRAFFIC FLOW) OF THE STREET LIGHT POLE FOUNDATION (SEE STANDARD PLAN NO. 422) WITH 1 1/2" (MIN)SCHEDULE 40 P.V.C. CONDUIT INSTALLED BETWEEN THE POLE AND PULL BOX.
4. STREET LIGHT CONDUCTOR TYPE AND SIZE SHALL BE AS SPECIFIED ON THE PLAN.
5. ALL STREET LIGHTS SHALL BE INDIVDUALY FUSED.

IT SHOULD BE NOTED THAT PARCELS LOCATED ON STREET CORNERS MAY AFFECT TWO STREET LIGHT CIRCUITS. THE APPROPRIATE STREET CROSSING, ETC. WILL BE REQUIRED. THE ENGINEER OR ARCHITECT SHALL CONTACT THE TRAFFIC SIGNAL AND STREET LIGHTING MAINTENANCE SECTION, (714) 536-5530, TO DETERMINE IF THE PARCEL IN QUESTION AFFECTS MORE THAN ONE STREET LIGHTING CIRCUIT.

IF NEW STREET LIGHTS ARE REQUIRED ON ANY STREET (AT THE DISCRETION OF THE TRANSPOPRTATION MANAGER), NEW STREET LIGHT POLES AND LUMINAIRES SHALL BE AS SPECIFIED IN THE CURRENT SPECIAL PROVISIONS.

STREET LIGHTS ON PACIFIC COAST HIGHWAY, (STATE ROUTE 1), AND BEACH BOULEVARD, (STATE ROUTE 39), WILL REQUIRE AN ENCROACHMENT PERMIT AND CALTRANS APPROVAL.

ALL COSTS ASSOCIATED WITH DESIGN, ENCROACHMENT PERMIT APPLICATIONS, INSPECTION, INSTALLATION OF CONDUITS, STREET LIGHTS, PULL BOXES, AND OTHER EQUIPMENT, MATERIALS, OR LABOR ASSOCIATED WITH STREET LIGHT INSTALLATION OR MODIFICATIONS, SHALL BE BORNE BY THE CONTRACTOR.

APPROVED: TRANSPORTATION MANAGER REVISION DATE: 6/23/08	CITY OF HUNTINGTON BEACH DEPARTMENT OF PUBLIC WORKS MODIFICATION TO CITY AND EDISON STREET LIGHTING SYSTEMS	STANDARD PLAN 411 1 of 2

PROPOSED STREET LIGHT PLACEMENTS SHALL BE REVIEWED AND APPROVED BY THE TRAFFIC ENGINEER. STREET LIGHTING ILLUMINATION CALCULATIONS ARE REQUIRED FOR ALL STREETS. A MEETING TO DISCUSS PROPOSED STREET LIGHT INSTALLATIONS WITH TRAFFIC ENGINEERING STAFF IS STRONGLY RECOMMENDED.

THE PLANS SHALL CONTAIN THE FOLLOWING CONSTRUCTION NOTE: INSTALL CITY-OWNED STREET LIGHT, ___ WATT (OR ___ LUMENS), ___ FOOT MOUNTING HEIGHT, ___ FOOT MAST ARM. SEE THE CURRENT SPECIAL PROVISIONS, FOR THE CATALOG NUMBERS FOR THE HIGH PRESSURE SODIUM VAPOR LUMINAIRES.

THE PLANS SHALL CONTAIN EITHER: A) THE STREET LIGHT POLE STATIONING BASED ON THE STREET CENTERLINE STATIONING; OR B) DIMENSION TO THE NEAREST PROPERTY LINE.

EDISON OWNED STREET LIGHTS

1. GRADING PLANS OR STREET IMPROVEMENT PLANS MUST SHOW EXISTING AND NON-AFFECTED STREET LIGHTS, (ON EACH SIDE OF THE PARCEL(S) AND ON BOTH SIDES OF THE STREET). THE INFORMATION SHALL CONTAIN STREET LIGHT POLE STATIONING, LUMINAIRE MOUNTING HEIGHT, MAST ARM LENGTH, AND LAMP WATTAGE OR LUMEN OUTPUT, PULL BOXES, AND CONDUIT.

2. PROPOSED STREET LIGHT PLACEMENTS SHALL BE REVIEWED AND APPROVED BY THE TRAFFIC ENGINEER. STREET LIGHTING ILLUMINATION CALCULATIONS ARE REQUIRED FOR ALL STREETS. A MEETING TO DISCUSS PROPOSED STREET LIGHT INSTALLATIONS WITH TRAFFIC ENGINEERING STAFF IS STRONGLY RECOMMENDED.

3. THE PLANS SHALL CONTAIN THE FOLLOWING CONSTRUCTION NOTE: INSTALL EDISON-OWNED STREET LIGHT, ___ WATT (OR ___ LUMENS), ___ FOOT MOUNTING HEIGHT, ___ FOOT MAST ARM. SEE THE CURRENT SPECIAL PROVISIONS, FOR THE CATALOG NUMBERS FOR THE HIGH PRESSURE SODIUM VAPOR LUMINAIRES.

4. THE PLANS SHALL CONTAIN EITHER: A) THE STREET LIGHT POLE STATIONING BASED ON THE STREET CENTERLINE STATIONING; OR B) DIMENSION TO THE NEAREST PROPERTY LINE.

STANDARD SPECIFICATIONS
FOR
ALL NEW TELEPHONE BOOTH INSTALLATIONS OR ANY TELEPHONE BOOTHS THAT ARE MODIFIED/RELOCATED

All electrical work shall conform to the provisions in the current National Electrical Code and the Special Provisions listed below. Should any discrepancies or conflicts between these specifications arise, the City Traffic Engineer shall be the final arbiter of the prevailing specification.

Special Provisions:

1. *Electrical plans will be submitted with the application for installation or modification.*
2. *A permit shall be required for any telephone booth installation or modification. The permit fee will be waived when the telephone booth installation or modification is made at the request of the City.*
3. *Only 2 inspections will be made per telephone booth location/permit. Any subsequent reinspections shall require a $75.00 reinspection fee per Resolution #6398 (effective 8/30/92).*
4. *All electrical components used in the telephone booth shall be of the type approved and stamped by nationally recognized testing laboratory.*
5. *No EMT will be allowed per City Ordinance 17.48.060.*
6. *All conduit in the public right-of-way shall be underground. Minimum conduit depth shall be 18", maximum depth shall be 36".*
7. *Conduit routing shall be the most direct route as approved by the Public Works Electrical Inspector.*
8. *Minimum size conductor shall be #12 THHN/THWN.*
9. *All conduit shall be minimum 1" nominal diameter, P.V.C. schedule 80.*

The following special provisions shall apply if applicable:

1. *A 15 amp G.F.C.I. breaker shall be installed.*
2. *The ground rod shall be 5/8"x10' stainless steel. Copper will not be permitted.*
3. *Ground clamp shall be of the "acorn" type.*

APPROVED: DATE: March 15, 1994

TRAFFIC ENGINEER

REVISION DATE: March 1994

CITY OF HUNTINGTON BEACH

DEPARTMENT OF PUBLIC WORKS

TELEPHONE BOOTH INSTALLATIONS IN THE PUBLIC RIGHT-OF-WAY

STANDARD PLAN 412

STANDARD SPECIFICATIONS
FOR
ALL NEW SHELTER INSTALLATIONS OR ANY SHELTERS THAT ARE MODIFIED/RELOCATED

All electrical work shall conform to the provisions in the current National Electrical Code and the Special Provisions listed below. Should any discrepancies or conflicts between these specifications arise, the City Traffic Engineer shall be the final arbiter of the prevailing specification.

Special Provisions:

1. *A 15 amp G.F.C.I. breaker shall be installed.*
2. *The ground rod shall be 5/8"x1' stainless steel. Copper will not be permitted.*
3. *Ground clamp shall be of the "acorn" type.*
4. *Minimum size conductor shall be #12 THHN.*
5. *All conduit shall be minimum 1" nominal diameter, P.V.C. schedule 80.*
6. *All conduit in the public right-of-way shall be underground. Minimum conduit depth shall be 18", maximum depth shall be 36".*
7. *Conduit routing shall be the most direct route as approved by the Public Works Electrical Inspector.*
8. *Only 2 inspections will be made per shelter location/permit. Any subsequent reinspections shall require a new permit.*
9. *All electrical components used in the shelter shall be of the type approved and stamped by nationally recognized testing laboratory.*
10. *Electrical plans will be submitted with the application for installation or modification.*

APPROVED: DATE: March 15, 1994 TRAFFIC ENGINEER REVISION DATE: March 1994	CITY OF HUNTINGTON BEACH DEPARTMENT OF PUBLIC WORKS	
	BUS SHELTER INSTALLATIONS (ELECTRICAL)	STANDARD PLAN 412 2 of 2

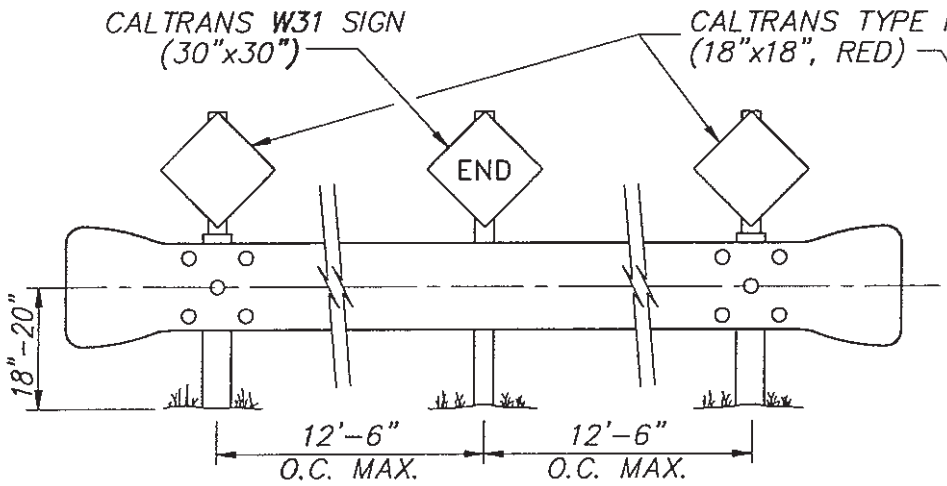

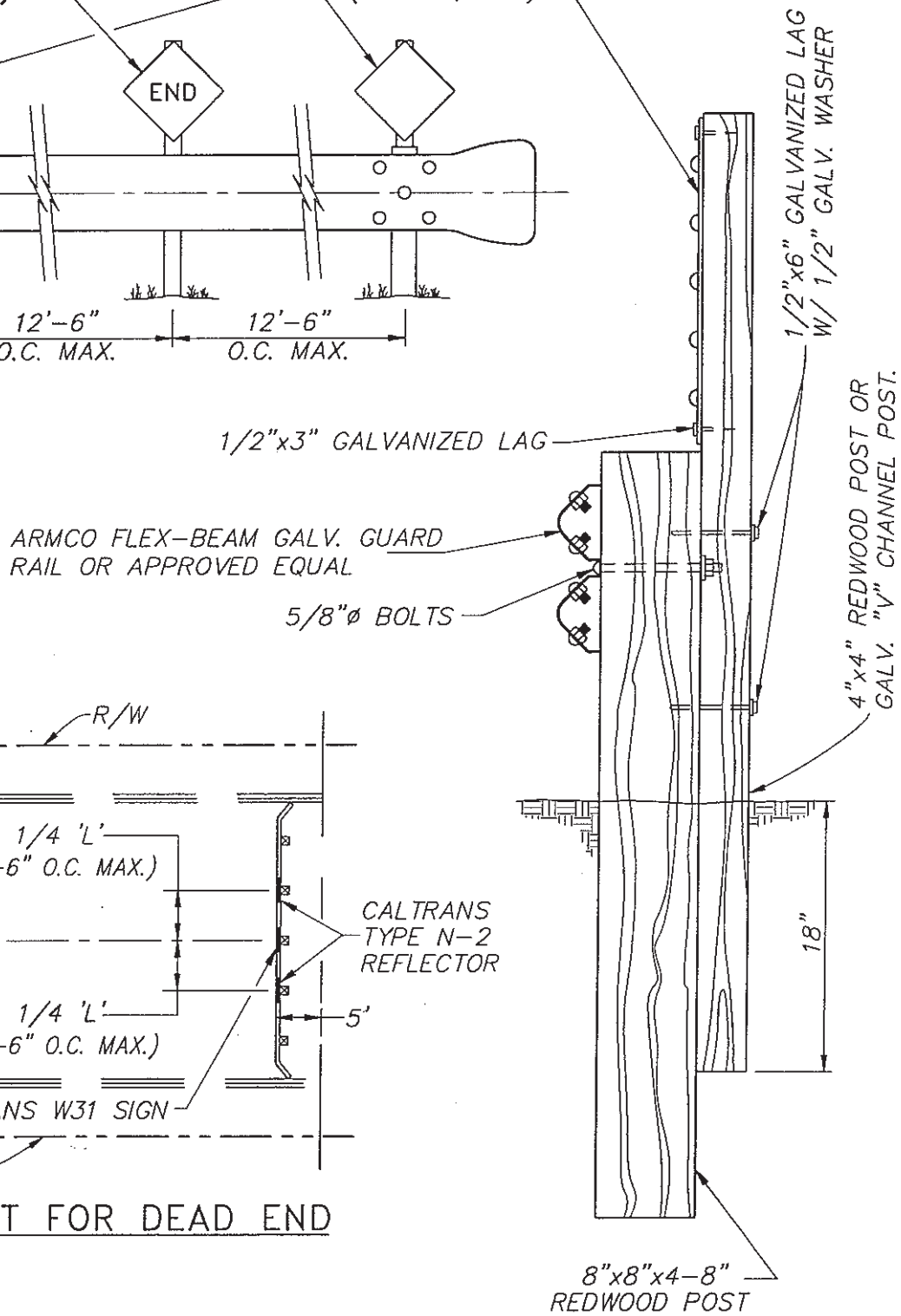

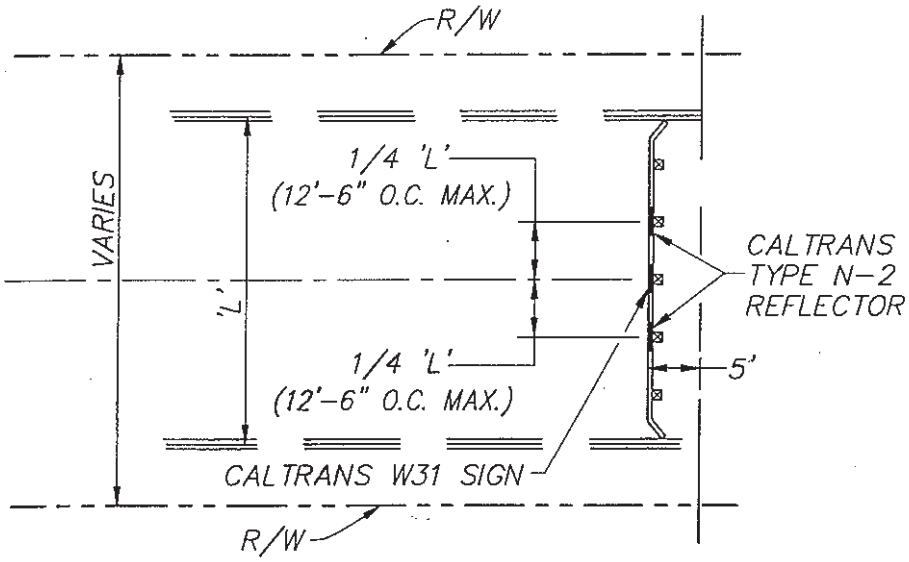

TREATMENT FOR DEAD END

GENERAL NOTES:

1. ALL WOOD IS TO BE CONSTRUCTION GRADE HEART REDWOOD.

APPROVED: DATE: March 15, 1994

TRAFFIC ENGINEER

REVISION DATE: March 1994

CITY OF HUNTINGTON BEACH

DEPARTMENT OF PUBLIC WORKS

END OF ROAD BARRICADE

STANDARD PLAN 413

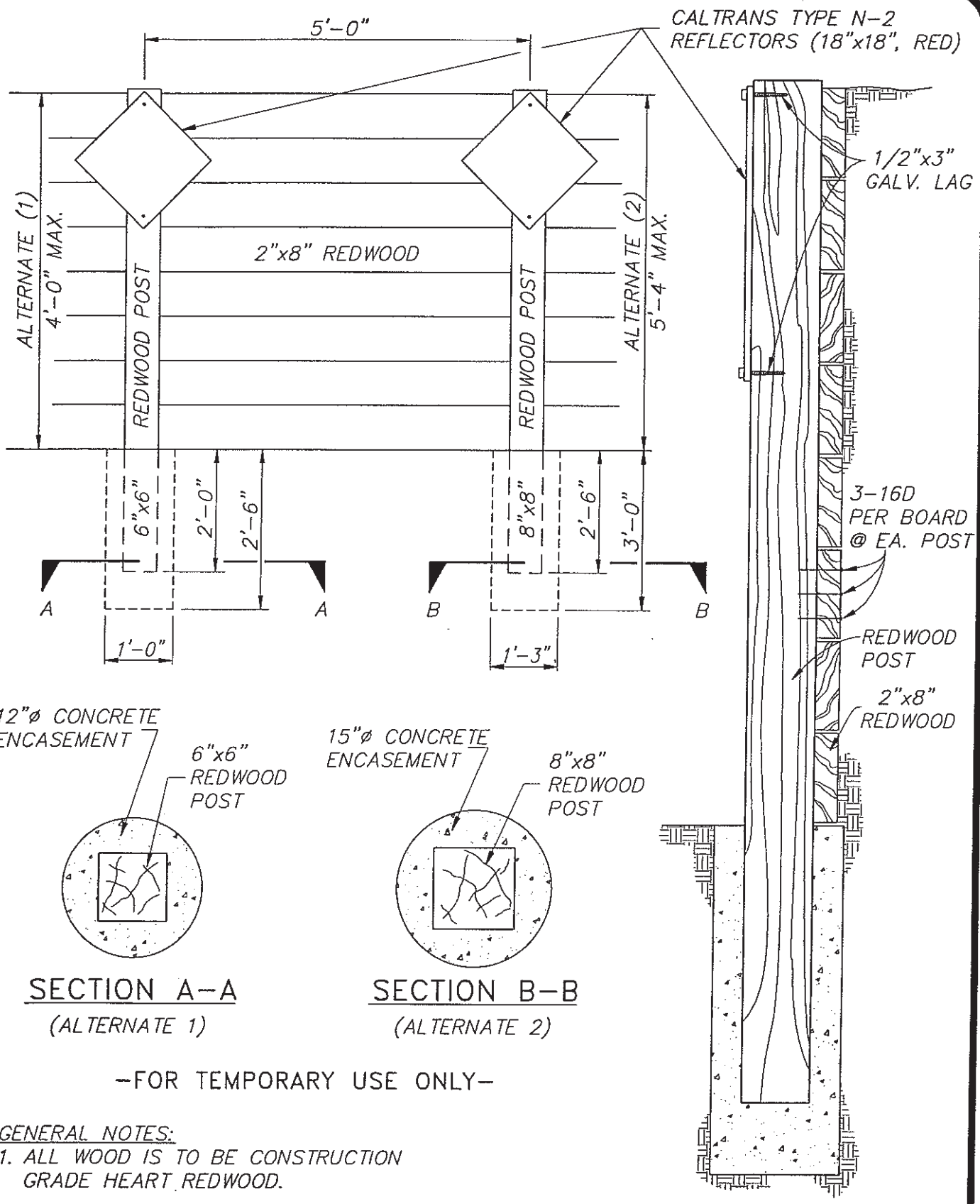

SECTION A-A
(ALTERNATE 1)

SECTION B-B
(ALTERNATE 2)

-FOR TEMPORARY USE ONLY-

GENERAL NOTES:
1. ALL WOOD IS TO BE CONSTRUCTION GRADE HEART REDWOOD.

APPROVED: DATE: March 15, 1994
TRAFFIC ENGINEER

REVISION DATE: March 1994

CITY OF HUNTINGTON BEACH
DEPARTMENT OF PUBLIC WORKS

WOOD RETAINING WALL AND BARRICADE

STANDARD PLAN
414

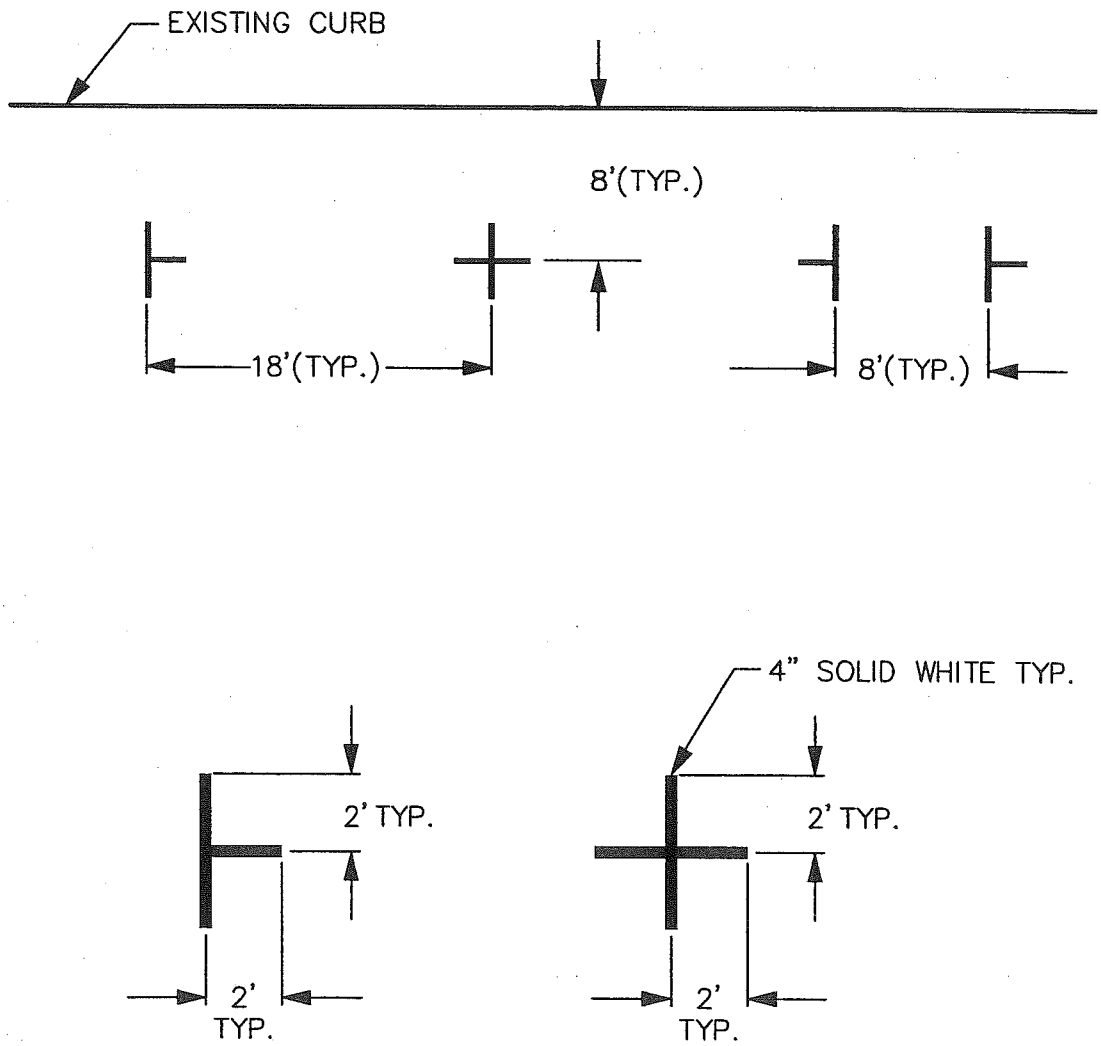

GENERAL NOTES

1. *ALL DIMENSIONS SHOWN ARE FOR A 18'x 8' STALL, ON A PUBLIC STREET.*

APPROVED:

TRANSPORTATION MANAGER

REVISION DATE: 6/23/08

CITY OF HUNTINGTON BEACH

DEPARTMENT OF PUBLIC WORKS

PARALLEL PARKING STALLS

STANDARD PLAN 417

1 of 1

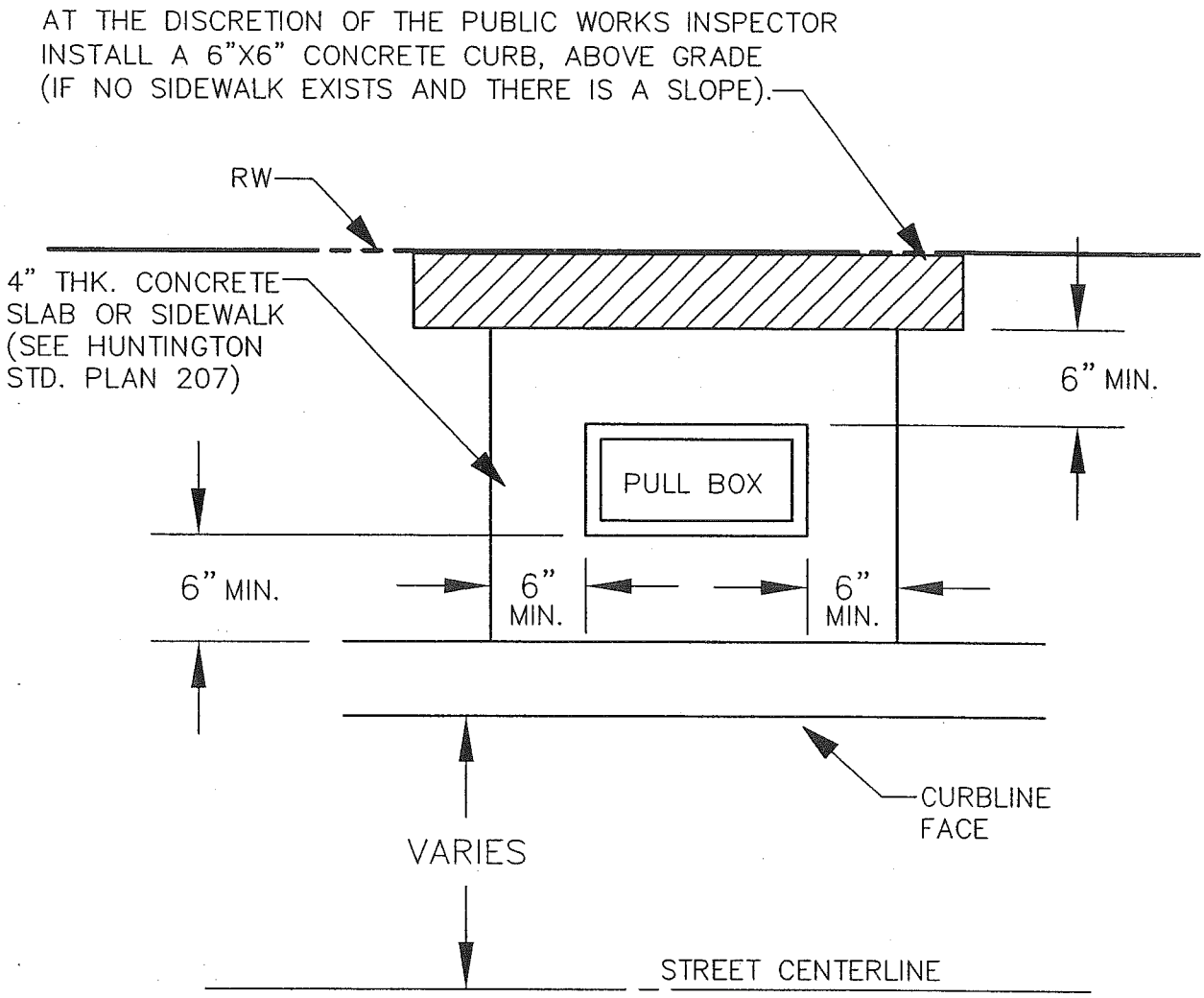

NOTES:

FOR THE INSTALLATION OF PULL BOX AND CONDUITS, REFFER TO HUNTINGTON BEACH STANDARD SPECIFICATIONS AND SPECIAL PROVISIONS FOR THE CONSTRUCTION OF TRAFFIC SIGNALS AND STREET LIGHTING SYSTEMS, CURRENT EDITION.

APPROVED:

TRANSPORTATION MANAGER

REVISION DATE: 6/23/08

CITY OF HUNTINGTON BEACH

DEPARTMENT OF PUBLIC WORKS

PULL BOX STABILIZATION FOR STREET LIGHTS

STANDARD PLAN 422

1 of 2

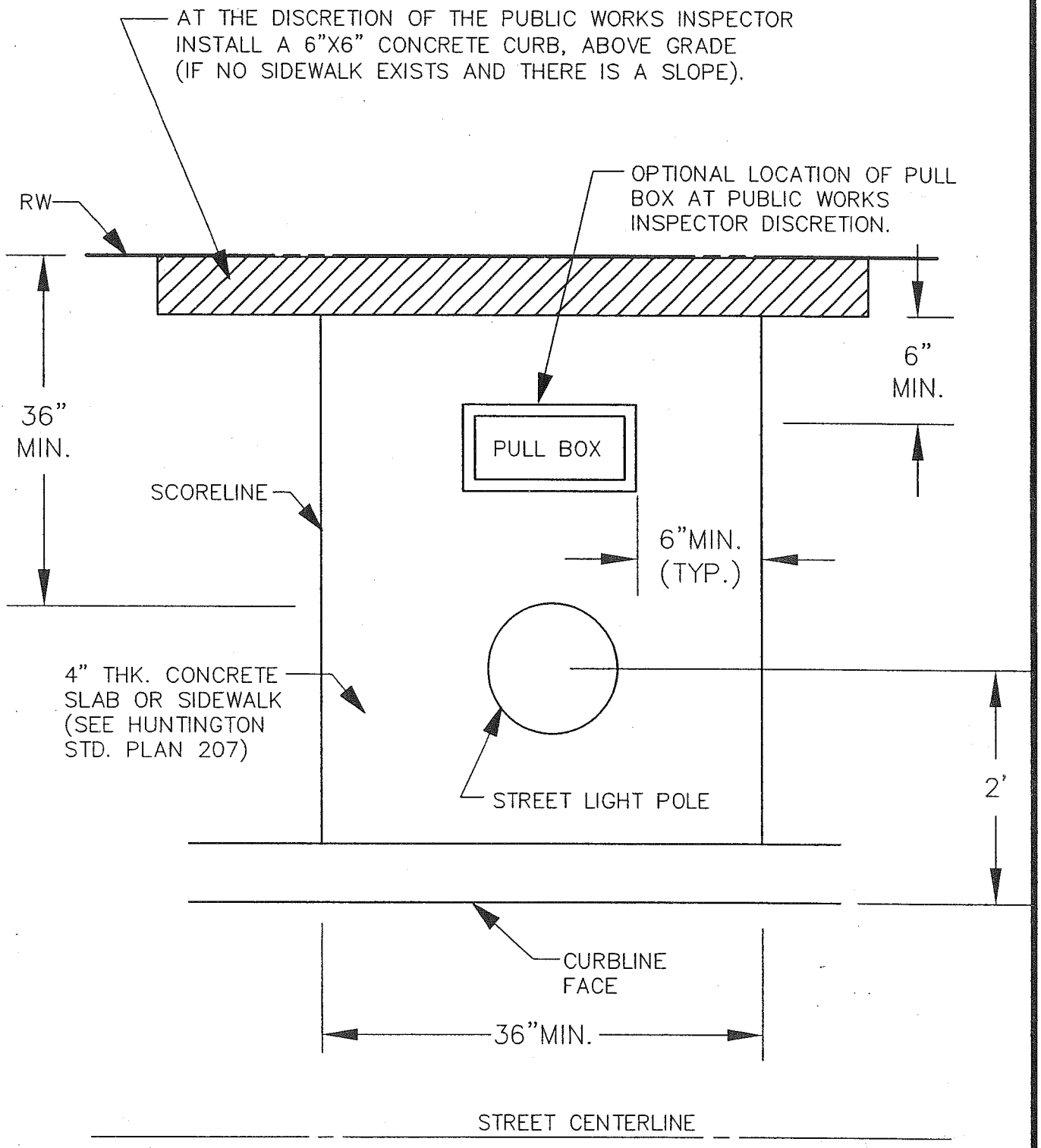

APPROVED:

TRANSPORTATION MANAGER

REVISION DATE: 6/23/08

CITY OF HUNTINGTON BEACH

DEPARTMENT OF PUBLIC WORKS

PULL BOX STABILIZATION FOR STREET LIGHTS

STANDARD PLAN 422

2 of 2

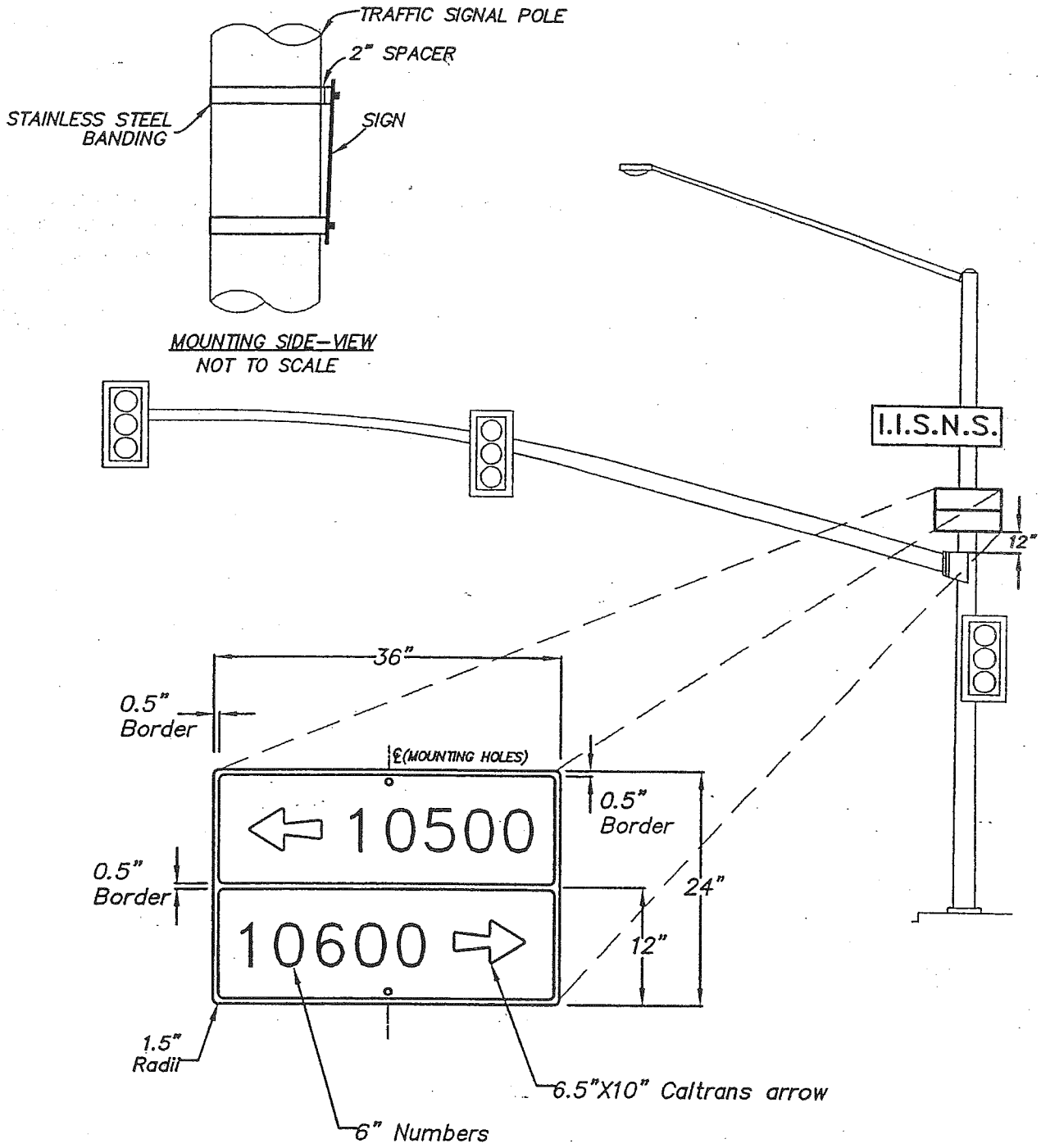

Sign shall be extruded from 6063T-4 aluminum alloy (Sheet aluminum 0.080"gauge minimum). Sign face shall be Caltrans blue reflective. Letters, border, block numbers, and arrows shall be white reflective sheeting. Reflective sheeting shall be 3M VIP (diamond) grade or any approved equivalent conforming to Caltrans materials specifications. The directional arrows shall always be positioned as shown.

APPROVED: DATE: 3-19-01

TRANSPORTATION MANAGER

REVISION DATE: _____

CITY OF HUNTINGTON BEACH

DEPARTMENT OF PUBLIC WORKS
TRAFFIC ENGINEERING

TRAFFIC SIGNAL BLOCK NUMBER SIGN

STANDARD PLAN No. 425
Sheet 1 of 1

SECTION

500

SEWER FACILITY DESIGN CRITERIA

1.1 SIZE

THE CITY WILL NOT ACCEPT SEWER MAINS SMALLER THAN 8" IN DIAMETER FOR OPERATION AND MAINTENANCE. SEWER MAINS THAT ARE CONSTRUCTED IN A COMMON TRENCH WITH ANOTHER UTILITY WILL NOT BE ACCEPTED BY THE CITY. ADEQUATE HORIZONTAL AND VERTICAL SPACING SHALL BE MAINTAINED IN ACCORDANCE WITH STD. PLAN 501.

1.2 MINIMUM AND MAXIMUM SLOPE

ALL SEWERS SHALL BE DESIGNED AND CONSTRUCTED TO PROVIDE A MEAN VELOCITY OF NOT LESS THAN 2 FEET PER SECOND (FPS) WHEN FLOWING HALF-FULL AT THE ESTIMATED PEAK FLOW AS CALCULATED USING MANNING'S FORMULA USING AN 'n' VALUE OF 0.013 FOR VCP, OR 0.011 FOR P.V.C. THE MAXIMUM ALLOWABLE SLOPE SHALL BE THE SLOPE WHICH GENERATES A MAXIMUM FLOW VELOCITY OF 15 fps AT THE PEAK FLOW RATE AS CALCULATED USING MANNING'S EQUATION AND THE ABOVE 'n' VALUES.

MINIMUM SLOPES ALLOWED:

PIPE SIZE	'S'
8"	0.0040
10"	0.0028
12"	0.0022
15"	0.0015
18"	0.0012
21" OR GREATER	0.0010

THESE ARE MINIMUM SLOPES; SEWERS SHOULD BE DESIGNED TO PROVIDE STEEPER SLOPES, WHENEVER POSSIBLE, UP TO THE MAXIMUM SLOPE STATED ABOVE. UNDER SPECIAL CONDITIONS, THE ENGINEER MAY REQUEST SLOPES OF LESS THAN THE MINIMUM STATED. THE ENGINEER MUST SUBMIT THIS REQUEST ALONG WITH BACK-UP DATA AND CALCULATIONS TO SHOW THAT THE DEPTH OF FLOW AT DESIGN AVERAGE FLOW WILL BE 0.3 OF THE PIPE DIAMETER OR GREATER. THE ENGINEER MUST ALSO SUBMIT COMPUTATIONS TO SHOW THE DEPTHS OF FLOW AT MINIMUM AND AVERAGE RATES OF FLOW. THE REQUEST SHALL ALSO DETAIL THE REASONS WHY THE NORMAL MINIMUM SLOPES CANNOT BE ACHIEVED. THE REQUEST AND SUPPORTING DATA MUST BE APPROVED BY THE DIRECTOR OF PUBLIC WORKS.

1.3 FLOW DESIGN CRITERIA

USE THE FOLLOWING TABLE FOR AVERAGE DAILY FLOW CALCULATIONS.

LAND USE	COEFFICIENT GPD PER ACRE
LOW DENSITY RESIDENTIAL	1600
MEDIUM DENSITY RESIDENTIAL	3200
MEDIUM-HIGH DENSITY RESIDENTIAL	4200
HIGH DENSITY RESIDENTIAL	5400
COMMERCIAL AREA	2000
INDUSTRIAL AREA	3500
OPEN SPACE	200
SCHOOL	3600 OR 20 GAL/STUDENT/DAY

PEAKING FACTOR EQUATION: $Q_P = 1.93\ (Q_{AVG})^{0.898}$

APPROVED:

CITY ENGINEER

REVISION DATE: May 2008

CITY OF HUNTINGTON BEACH

DEPARTMENT OF PUBLIC WORKS

SEWER FACILITY DESIGN CRITERIA

STANDARD PLAN 500

THE DESIGN PEAK FLOW RATE IN PIPES 12" AND SMALLER WILL BE LIMITED BY THE DEPTH RATIO OF 'D/d' = 0.5: 15" PIPES 'D/d' = 0.67 AND 18" AND LARGER 'D/d'=0.75, WHERE 'D/d' IS THE RATIO OF CALCULATED FLOW DEPTH TO PIPE INSIDE DIAMETER.

1.4 STANDARD LOCATION AND ALIGNMENT

IN LOCAL RESIDENTIAL AND INDUSTRIAL STREETS, SEWER MAINS ARE TO BE LOCATED 5' NORTH OR EAST OF THE STREET CENTERLINE IN THE CENTER OF THE DRIVING LANE. IN MAJOR, PRIMARY, AND SECONDARY HIGHWAYS, THE SEWER MAINS WILL BE LOCATED IN THE CENTER OF THE DRIVING LANE NEAREST TO THE CENTER OF THE STREET, BUT WILL NOT BE LOCATED IN THE MEDIAN STRIP OR PARKING LANE.

ON CURVED STREETS, SEWER MAINS SHALL BE PARALLEL WITH THE CENTERLINE OF THE STREET BY USE OF HORIZONTAL CURVES FOR THE ALIGNMENT, UNLESS OTHERWISE APPROVED BY THE CITY ENGINEER.

A MAXIMUM HORIZONTAL SEPARATION BETWEEN SEWER AND DOMESTIC WATER MAINS SHALL BE ACHIEVED BY ALIGNING THE SEWER ON THE OPPOSITE SIDE OF THE CENTERLINE FROM THE DOMESTIC WATER MAIN.

1.5 HORIZONTAL CURVE DESIGN CRITERIA

MINIMUM RADIUS OF CURVATURE FOR SEWERS SHALL BE AS FOLLOWS:

VITRIFIED CLAY PIPE (VCP)

PIPE SIZE	MIN. RADIUS
8"–12"	250'
15"–18"	350'
21"–27"	400'
30"–39"	450'
OVER 39"	500'

POLYVINYL CHLORIDE PIPE (PVC)

PIPE SIZE	MIN. RADIUS
8"–10"	350'
12"	420'

LESSER RADIUS OF CURVATURE MAY BE PERMITTED BY THE CITY ENGINEER IN SPECIAL CASES. VERTICAL CURVES ARE NOT ALLOWED. WHEN CURVED SEWERS CAN NOT BE CONCENTRIC WITH STREET CENTERLINE THEN STRAIGHT SECTIONS SHALL BE USED. NO REVERSE CURVES ALLOWED, MUST HAVE A TANGENT IN AND OUT OF CURVE.

1.6 STATIONING PROCEDURE

CENTERLINE STATIONS FOR SEWER MAINS SHALL BE SHOWN AND WILL BE INDEPENDENT OF STREET STATIONING. ALL MANHOLES ARE TO BE NUMBERED AND THE NUMBERS NOTED ON THE PLANS (EXAMPLE: MH #1). SEWER STATIONS START 0+00.00 AT THE DOWNSTREAM POINT OF CONNECTION AND INCREASE UPSTREAM TO THE LAST MANHOLE ON A SEWER LINE. OTHER STARTING STATIONS MAY BE USED WHERE APPROPRIATE. INTERSECTING SEWER LINES WILL BE INDEPENDENTLY STATIONED FROM THEIR DOWNSTREAM POINT OF CONNECTION AND INCREASE UPSTREAM TO THE LAST MANHOLE OR CLEAN–OUT. EACH LINE SHALL BE INDEPENDENTLY LABELED FOR IDENTIFICATION AS "SEWER LINE A", "SEWER LINE B", ETC.

1.7 MINIMUM DEPTH

MINIMUM DEPTH OF COVER FROM FINISH SURFACE TO THE TOP OF SEWER MAIN PIPE SHALL BE 6' UNLESS OTHERWISE APPROVED BY THE CITY ENGINEER.

4" SEWER HOUSE CONNECTIONS SHALL HAVE A MINIMUM OF 4' OF COVER FROM THE TOP OF THE CURB TO THE TOP OF THE PIPE AT THE CURB LINE. AT THE TIME OF CONSTRUCTION, STAKES SHALL BE PROVIDED FOR LOCATION AND GRADE OF EACH EACH HOUSE LATERAL.

1.8 SEWER PIPE MATERIAL

ALL GRAVITY SEWERS SHALL BE EITHER EXTRA STRENGTH VCP OR SDR-35 PVC AS DETAILED IN SECTIONS 207-8 AND 207-17 OF THE MOST CURRENT EDITION OF THE GREEN BOOK REPLACEMENT PIPE SHALL MATCH EXISTING.

ALL SEWER FORCE MAINS SHALL BE PVC PIPE MEETING AWWA C-900 AND MINIMUM CLASS 150 PIPE STANDARDS.

ALL SEWER SERVICE LATERALS SHALL BE EITHER EXTRA STRENGTH VCP OR SDR-35 PVC PIPE.

ALL SEWERS IN INDUSTRIALLY ZONED AREAS OR COMMERCIAL ZONED AREAS SHALL BE EXTRA STRENGTH VCP. (PLASTIC PIPE COULD BE DEGRADED BY HIGH TEMPERATURE DISCHARGES OR ORGANIC SOLVENTS).

DUCTILE-IRON PIPE

1. DUCTILE-IRON PIPE SHALL BE MANUFACTURED IN ACCORDANCE WITH AWWA C151.
2. ALL DUCTILE-IRON PIPE SHALL BE THICKNESS CLASS 50 FOR PLAIN END PIPE AND THICKNESS CLASS 53 FOR FLANGED SPOOLS UNLESS INDICATED OTHERWISE.
3. ALL DUCTILE-IRON PIPE SHALL BE CEMENT-MORTAR LINED IN ACCORDANCE WITH AWWA C104.
4. UNLESS OTHERWISE CALLED OUT ON THE PLANS, A "PUSH-ON" TYPE JOINT SHALL BE USED. THE JOINT DIMENSIONS AND GASKET SHALL BE AS SPECIFIED IN AWWA C111.
5. FLANGES FOR DUCTILE-IRON PIPE SHALL BE THE "SCREWED-ON" TYPE IN ACCORDANCE WITH AWWA C115.

1.9 MANHOLES

MANHOLES WILL BE REQUIRED AT THE FOLLOWING LOCATIONS:

1. CHANGES OF SLOPE.
2. CHANGES OF DIRECTION.
3. CHANGES OF PIPE SIZE.
4. TERMINATION OF SEWERS (EXCEPT FOR PRIVATE SEWERS WHICH MAY TERMINATE AT A CLEAN OUT).
5. SPECIAL LOCATIONS AS DESIGNATED BY THE CITY ENGINEER.
6. CHANGES IN TYPE OF PIPE MATERIAL; I.E., PVC TO VCP.

MAXIMUM DISTANCE BETWEEN MANHOLES SHALL BE 350' UNLESS OTHERWISE APPROVED BY THE CITY ENGINEER. MINIMUM DROP THROUGH MANHOLES SHALL BE 0.10'

MANHOLE SHALL BE COMPLETELY LINED WITH A POLYURETHANE COATING NO LESS THAN 125 MIL. AND CONFORMING TO THE "GREENBOOK" SECTION 500-2.4. OTHER "GREENBOOK" APPROVED LINERS MAY BE INSTALLED WITH CITY ENGINEER APPROVAL.

1.10 MANHOLE TYPE AND SIZE

MANHOLES SHALL BE PRECAST REINFORCED CONCRETE WITH ECCENTRIC CONE IN ACCORDANCE WITH CITY STD. PLANS 504 AND 505. MINIMUM DIAMETER SHALL BE 48" AND LARGER SIZES MAY BE REQUIRED AS SHOWN IN THE FOLLOWING TABLE.

MANHOLE SIZES

SEWER MAIN	MAXIMUM BRANCH SIZE	MH SIZE	FRAME AND COVER
8"–15"	10"	48"	24"
18"–24"	12"	60"	24"/36"
27"–36"	15"	72"	36"

EXTRA DEPTH REQUIREMENT

DEPTH OF COVER	MH SIZE
0'–15'	48"
15.5'–22'	60"
22.5' AND GREATER	72"

1.11 MANHOLE COVERS

MANHOLE COVERS SHALL BE CAST–IRON IN ACCORDANCE WITH CITY STD. PLAN 513. THE SIZE SHALL BE DETERMINED FROM THE TABLE IN SECTION 1.10 TEMPORARY COVERS MAY BE NECESSARY IN NEW STREETS. IN THESE CASES, THE MANHOLE SHAFT SHALL BE LEFT 6", MINIMUM, BELOW SUBGRADE. A HEAVY METAL PLATE ACCEPTABLE TO THE CITY INSPECTOR SHALL BE PROVIDED TO COVER THE MANHOLE OPENING. CLEATS SHALL BE PROVIDED IN AT LEAST FOUR POINTS FOR THE UNDERSIDE OF THE TEMPORARY COVER TO PREVENT THE TEMPORARY COVER FROM MOVING. THESE CLEATS SHALL EXTEND A MINIMUM OF 3" FROM THE COVER PLATE AND SHALL BE WELDED TO THE PLATE.

PLYWOOD SHALL BE CUT TO THE SHAPE AND SIZE OF THE MANHOLE BASE AND PLACED IN THE BASE BEFORE THE TEMPORARY COVER IS PLACED ON THE SHAFT. AT THE COMPLETION OF FINAL PAVING, EACH MANHOLE SHALL BE RAISED TO FINAL GRADE BY THE INSTALLATION OF GRADE RINGS, AS NECESSARY, AND THE INSTALLATION OF THE PERMANENT FRAME AND COVER ASSEMBLY.

1.12 CLEAN OUTS

USE OF CLEAN–OUTS AS SHOWN IN CITY STD. PLAN 508 SHALL BE LIMITED TO THE FOLLOWING INSTANCES UNLESS APPROVED OTHERWISE BY THE CITY ENGINEER.

A. SHORT SECTIONS OF SEWER MAIN, LESS THAN 250', WHICH WILL BE EXTENDED.
B. ALL COMMERCIAL AND INDUSTRIAL SEWER LATERAL INSTALLATIONS AT THE PROPERTY LINE.
C. BETWEEN MANHOLES, IF THERE IS A REVERSE CURVE IN THE SEWER MAIN, TO FACILITATE CLEANING OF THE MAIN LINE.
D. SPECIAL INSTANCES SUCH AS ON A SEWER LATERAL TO A SINGLE FAMILY RESIDENTIAL LOT WHERE THE DWELLING UNIT IS SET BACK MORE THAN 100' FROM THE PROPERTY LINE, WHERE THERE IS A LARGE SLOPE UP TO THE BUILDING PAD FROM THE PROPERTY LINE AND A GRADE CHANGE IN THE LATERAL IS NECESSARY, OR WHERE THE SEWER LATERAL ENTERS THE REAR OF THE LOT FROM A PUBLIC RIGHT–OF–WAY.
E. ON A LATERAL WHERE THE OVERFLOW LEVEL OF THE LOWEST WASTEWATER FIXTURE IN THE BUILDING IS BELOW THE RIM ELEVATION OF THE UPHILL SEWER MANHOLE ON THE MAIN LINE. IN THIS SITUATION THE RIM ELEVATION OF THE CLEAN–OUT INSTALLED AT THE PROPERTY LINE SHALL BE AT LEAST 6" BELOW THE OVERFLOW ELEVATION OF THE LOWEST WASTE WATER FIXTURE ON THE LATERAL. A BACKFLOW PREVENTION DEVICE IS REQUIRED ON THE LATERAL.

1.13 FORCE MAIN CRITERIA

THE SIZE OF SEWER FORCE MAINS SHALL BE DETERMINED BY A COMPARATIVE STUDY OF THE CONSTRUCTION COST AND PUMPING COSTS FOR SEVERAL ALTERNATIVE SIZES. IN NO CASE SHALL A FORCE MAIN BE LESS THAN 4" IN DIAMETER. THE CAPACITY OF THE FORCE MAIN SHALL BE THE DESIGN PEAK FLOW FROM THE PUMP STATION CALCULATED FROM MANNING'S EQUATION USING "n" = 0.011. THE NOMINAL DESIGN VELOCITY FOR A FORCE MAIN SHOULD BE 3.0 fps, WITH MINIMUM VELOCITY OF 2.0 fps, AND MAXIMUM VELOCITY OF 6.0 fps. THE DISCHARGE SHALL BE INTO A MANHOLE WITH A SMOOTH FLOW TRANSITION TO A GRAVITY SEWER.

1.14 SEPARATION FROM SEWER AND WATER AND RECLAIMED WATER LINE

HORIZONTAL SEPARATION

STATE DEPARTMENT OF PUBLIC HEALTH SERVICES REGULATIONS REQUIRE A 10' MINIMUM HORIZONTAL SEPARATION BETWEEN WATER OR RECLAIMED WATER AND SEWER LINES. THERE ARE SPECIAL CONSTRUCTION METHODS WHICH MAY BE USED WHERE THIS SEPARATION CANNOT BE ACHIEVED AND THEY ARE SHOWN IN CITY STD. PLAN 501. SEPARATION OTHER THAN THE PUBLIC HEALTH DEPARTMENT MINIMUMS MUST BE APPROVED BY THE CITY ENGINEER.

VERTICAL SEPARATION

WATER, SEWER, AND RECLAIMED WATER LINES ARE TYPICALLY LOCATED VERTICALLY FROM THE STREET SURFACE DOWN IN ORDER OF DECREASING QUALITY. WATER WILL BE THE SHALLOWEST AND SEWER MAINS WILL BE THE DEEPEST. CITY STD. PLAN 501. SHOWS THE CLEARANCE REQUIREMENTS FOR PARALLEL AND PERPENDICULAR CONSTRUCTION OF WATER AND SEWER LINES. CONCRETE ENCASEMENT MAY BE REQUIRED IF THE CLEARANCES INDICATED IN STD. PLAN 501 CANNOT BE ACHIEVED. DETAILS OF APPROVED ENCASEMENT INSTALLATIONS ARE SHOWN IN STD. PLAN 514 AND THE THE LENGTH OF ENCASEMENT SHALL BE SUFFICIENT TO EXTEND A MINIMUM OF 10' ON EACH SIDE OF THE CROSSING TO PROVIDE THE REQUIRED HORIZONTAL SERARATION.

WATER, RECLAIMED WATER AND SEWER LINES OF 24" DIA. OR GREATER MAY CREATE SPECIAL HAZARDS BECAUSE OF LARGE VOLUMES OF FLOW. THEREFORE, INSTALLATIONS SHALL BE REVIEWED AND APPROVED BY THE STATE DEPTARTMENT OF PUBLIC HEALTH SERVICES AND THE UTILITIES DIVISION PRIOR TO ISSUANCE OF PUBLIC WORKS PERMIT.

1.15 HOUSE LATERALS

SEWER LATERALS SHALL BE CONSTRUCTED 1' PAST THE PROPERTY LINE FROM THE MAIN LINE AND THERE SHALL BE A SEPARATE LATERAL FOR EACH INDIVIDUALLY OWNED BUILDING SEWER LATERALS SHALL BE A MINIMUM 4" DIAMETER. APARTMENT AND CONDOMINIUM DEVELOPMENTS SHALL HAVE AT LEAST ONE 6", OR ONE 8" LATERAL TO (AS DETERMINED BY SEWER STUDY) SERVE EACH BUILDING IN THE DEVELOPMENT WHICH CONTAINS MORE THAN ONE DWELLING UNIT. SEWER LATERALS WILL BE CONSIDERED PRIVATE FROM THE PUBLIC RIGHT-OF-WAY TO THE BUILDING. SLOPE OF HOUSE LATERALS SHALL BE 1% MINIMUM. REPLACEMENT PIPE SHALL MATCH EXISTING PIPE MATERIAL. EXISTING 4" CHIMNEYS SHALL NOT HAVE MORE THAN ONE HOUSE CONNECTION.

1.16 MONUMENTATION

PERMANENT VISIBLE MONUMENTS SHALL BE SET TO INDICATE THE LOCATIONS OF ALL SEWER LATERALS. AN "S" STAMPED IN THE CURB FACE IS THE MOST DESIRABLE METHOD. THE METHOD USED SHALL BE INDICATED ON THE PLANS. A LICENSED CIVIL ENGINEER OR SURVEYOR SHALL VERIFY LOCATION OF THESE SET MONUMENTS AND SHALL BE REFLECTED IN THE AS-BUILT DRAWINGS SUPPLIED TO PUBLIC WORKS AT THE CONCLUSION OF THE PROJECT.

1.17 PRIVATE SEWERS

PRIVATE SEWER SHALL BE DESIGNED IN ACCORDANCE WITH THESE STANDARDS. ON SITE SEWERS WILL NOT BE ACCEPTED FOR MAINTENANCE BY THE CITY. SEWER LATERALS WILL BE CONSIDERED PRIVATE FROM THE MAIN LINE WYE TO THE BUILDING.

1.18 PLAN REQUIREMENTS

ALL SEWER SYSTEM DESIGNS SHALL BE SHOWN IN PLAN AND PROFILE, EXCEPT SEWER LATERALS. SEWER LINE SLOPE SHALL BE SHOWN AS A DECIMAL SLOPE RATIO. POTHOLED ELEVATIONS SHALL BE SHOWN ON PLANS FOR DOWNSTREAM JOIN POINTS AND EXISTING UNDERGROUND STRUCTURES WHICH ARE WITHIN 3' OF THE PROPOSED SEWER AND WHICH CANNOT BE RELOCATED. PLANS SHALL INCLUDE AN INDEX MAP SHOWING ALL SEWER MAINS, MANHOLES AND CLEANOUTS AT A SCALE NOT SMALLER THAN 1" = 400'. SEWER LATERALS SHALL BE SHOWN ON ALL PLANS WITH CORRECT SEWER MAINLINE STATION OR OTHER APPROVED MEANS OF DIMENSIONING THE LATERAL LOCATION.

1.19 STANDARD SEWER NOTES

THE FOLLOWING NOTES MUST APPEAR ON THE TITLE SHEET OF PLANS.

A. ALL SEWER WORK SHALL CONFORM TO THE CITY'S STANDARDS AND THE STANDARD GREEN BOOK, AS LAST REVISED.
B. THE SEWER CONTRACTOR SHALL HAVE A COPY OF THE APPROVED IMPROVEMENT PLANS, PUBLIC WORKS PERMITS AND THE CITY'S STANDARD PLANS ON THE JOB AT ALL TIMES.
C. THE CONTRACTOR SHALL OBTAIN ALL NECESSARY PERMITS.
D. THE CITY'S PUBLIC WORKS DEPARTMENT SHALL BE CALLED FOR INSPECTION TWO WORKING DAYS BEFORE START OF WORK AT (714) 536-5431.
E. THE CONTRACTOR SHALL EXPOSE ALL JOIN POINTS TO THE EXISTING SEWER SYSTEM FOR VERIFICATION OF LOCATION AND ELEVATION BEFORE CONSTRUCTION.
F. STATIONS SHOWN AS 0+00.00 ARE SEWER STATIONS AND ARE INDEPENDENT OF ALL OTHER STATIONS.
G. ALL LATERALS ARE TO BE STAKED BY A SURVEYOR BEFORE TRENCHING AND A COMPLETE SET OF CUT SHEETS SUPPLIED TO THE CITY INSPECTOR.
H. ALL SEWER MANHOLE LIDS ARE TO HAVE AN "S" CAST THEREON AS SHOWN ON STD. PLAN 513.
I. INFILTRATION AND AIR TESTING OF SEWER LINES SHALL BE IN ACCORDANCE WITH THE GREEN BOOK, AS LAST REVISED.
J. ALL SEWER LINE SHALL BE BALLED IN THE PRESENCE OF THE CITY INSPECTOR BEFORE COMPLETION OF ALL LEAKAGE TESTS.
K. PIPE LINE LEAKAGE TESTS SHALL BE MADE IN THE PRESENCE OF THE CITY INSPECTOR AFTER BACKFILL HAS BEEN COMPLETED, COMPACTION TEST ON BACKFILL HAVE BEEN MADE, AND THE BACKFILL HAS BEEN ACCEPTED BY THE CITY INSPECTOR.
L. THE CONTRACTOR SHALL HAVE ALL SEWER MAIN LINE, 8" OR LARGER, INSPECTED BY A CLOSED CIRCUIT TELEVISION SYSTEM WITHIN 1 HOUR AFTER CLEAR WATER FLUSHING VIDEO TAPE RECORDING WILL BE MADE OF THE INSPECTION AND A COPY GIVEN TO THE CITY INSPECTOR.
M. NO SEWER LATERAL WYE OR TEE MAY BE LOCATED CLOSER THAN 5' TO ANY STRUCTURE.

N. ALL NEW SEWER LATERALS WILL BE CONSTRUCTED BY EITHER CUT-IN WYES OR BY CORE DRILLING FOR A SADDLE CONNECTION INTO AN EXISTING SEWER MAIN. TAPPING WILL NOT BE ALLOWED.

O. ALL SEWER LATERALS WILL BE CONSIDERED PRIVATE FROM THE PUBLIC RIGHT-OF-WAY TO THE BUILDING.

P. MANDREL REQUIREMENTS FOR PVC SEWER LINES SHALL BE IN ACCORDANCE WITH THE GREEN BOOK AS LAST REVISED.

Q. CONCRETE USED IN SEWER CONSTRUCTION SHALL BE IN ACCORDANCE WITH THE GREEN BOOK AS LAST REVISED.

1.20 EASEMENTS

SEWER EASEMENTS SHALL ADHERE TO THE FOLLOWING CONDITIONS:

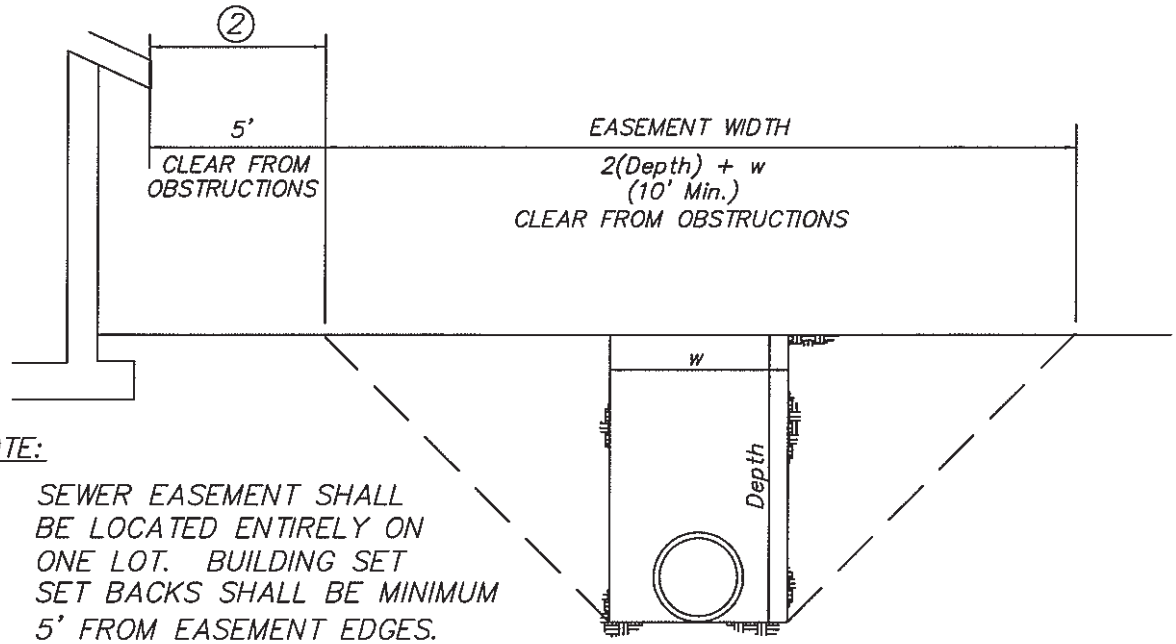

NOTE:

1 SEWER EASEMENT SHALL BE LOCATED ENTIRELY ON ONE LOT. BUILDING SET SET BACKS SHALL BE MINIMUM 5' FROM EASEMENT EDGES.

GENERAL NOTES:

1. WHERE APPLICABLE, PERMANENT EASEMENTS SHALL BE DEDICATED ON THE FINAL SUBDIVISION MAP TO THE CITY OF HUNTINGTON BEACH.
2. SEWER SHALL BE LOCATED AT THE CENTER LINE OF EASEMENTS.
3. EASEMENT SHALL BE EXCLUSIVELY FOR SEWER PURPOSES.
4. SURFACE AREA WITHIN EASEMENT SHALL BE PAVEMENT OR GROUND COVER UNLESS OTHERWISE APPROVED BY THE CITY ENGINEER.

APPROVED: CITY ENGINEER REVISION DATE: May 2008	CITY OF HUNTINGTON BEACH DEPARTMENT OF PUBLIC WORKS SEWER FACILITY DESIGN CRITERIA	STANDARD PLAN 500 7 of 7

BASIC SEPARATION STANDARDS

1. PARALLEL CONSTRUCTION: THE HORIZONTAL DISTANCE BETWEEN PRESSURE DOMESTIC WATER AND RECLAIMED WATER MAINS AND SEWER LINES SHALL BE AT LEAST 10'.
2. PERPENDICULAR CONSTRUCTION (CROSSING): PRESSURE WATER SHALL BE AT LEAST 12" ABOVE SANITARY SEWER AND RECLAIMED WATER LINES WHERE THESE LINES MUST CROSS.
3. SPECIAL PROVISIONS: ALTERNATIVE CONSTRUCTION CRITERIA WHERE THE BASIC SEPARATION STANDARDS CANNOT BE ATTAINED ARE SHOWN BELOW.
4. ANY VARIATIONS TO THIS STANDARD MUST BE APPROVED IN ADVANCE BY THE STATE DEPARTMENT OF PUBLIC HEALTH SERVICES AND THE CITY.

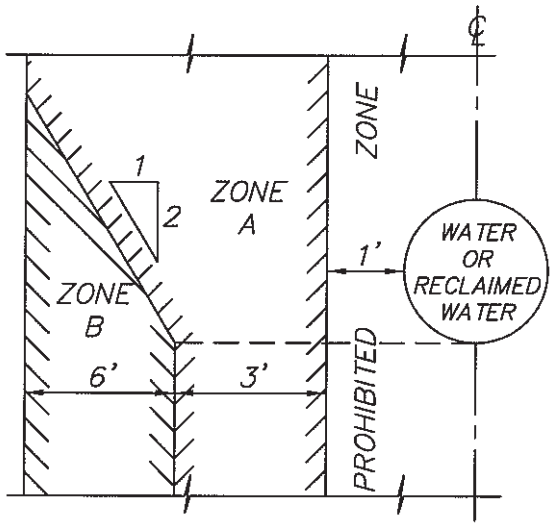

PARALLEL CONSTRUCTION

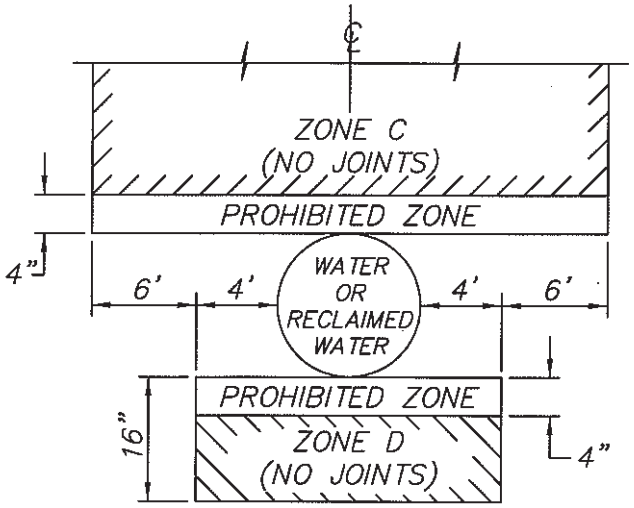

PERPENDICULAR CROSSING

IF ANY SEWER PIPELINES ARE TO BE CONSTRUCTED WITHIN ANY OF THE ABOVE INDICATED ZONES, SPECIAL CONSTRUCTION SHALL BE REQUIRED AS DESCRIBED BELOW.

CONSTRUCTION REQUIREMENTS

ZONE	SEWER
A	DO NOT LOCATE ANY PARALLEL SEWER LINES IN THIS AREA WITHOUT STATE AND LOCAL HEALTH DEPARTMENT APPROVAL.
B	USE EXTRA STRENGTH V.C.P. OR D.I.P. WITH COMPRESSION JOINTS.
C	USE D.I.P. WITH MECHANICAL JOINTS OR CLASS 200 P.V.C. – AWWA C900.
D	USE D.I.P. OR CLASS 200 P.V.C. – AWWA C900.

NO FORCE MAINS IN ZONES A OR D.

APPROVED:

CITY ENGINEER

REVISION DATE: May 2008

CITY OF HUNTINGTON BEACH

DEPARTMENT OF PUBLIC WORKS

BASIC SEPARATION

FROM DOMSESTIC WATER AND RECLAIMED WATER

STANDARD PLAN

501

1 of 1

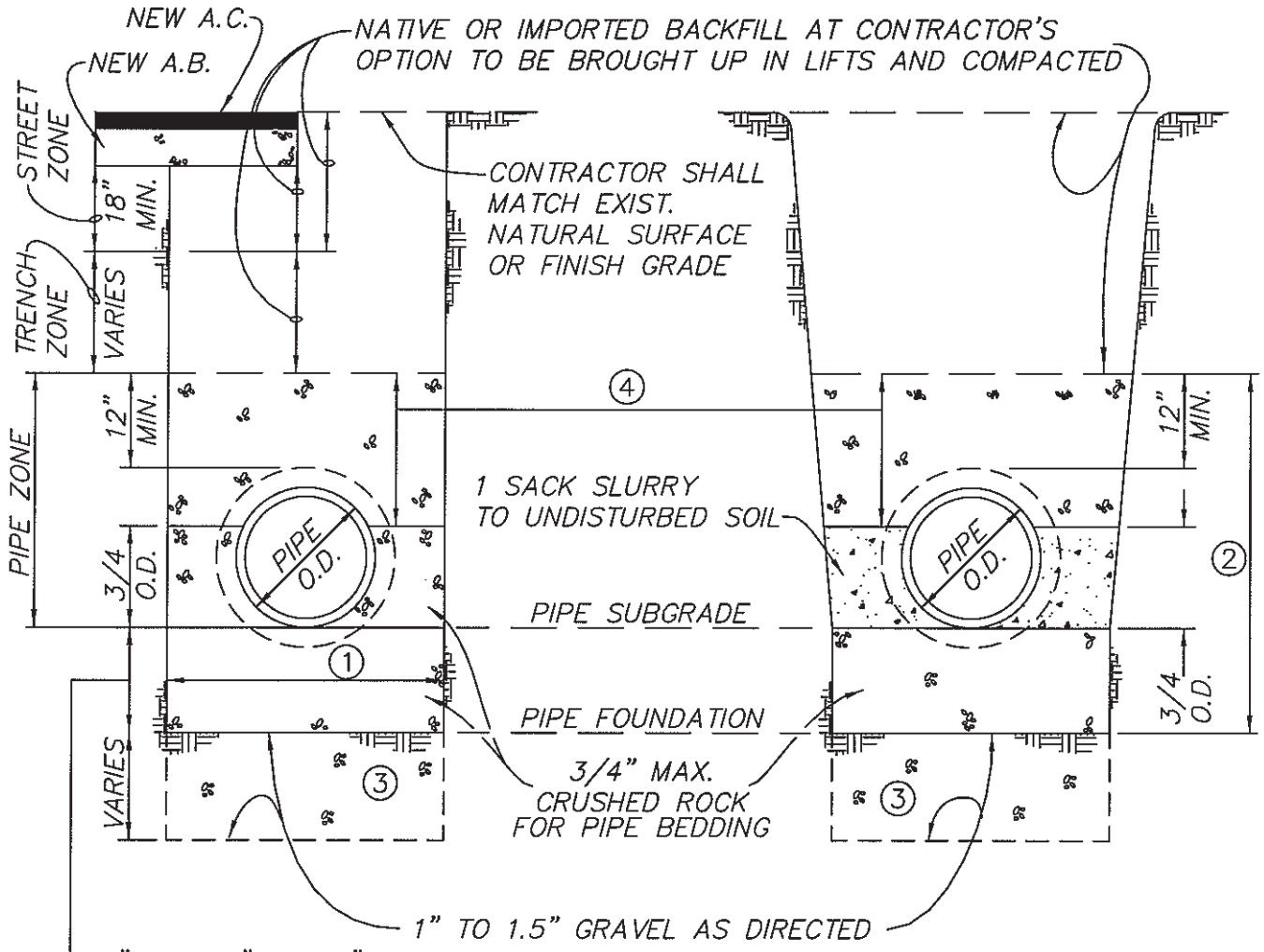

TYPICAL NORMAL BEDDING

OVERWIDTH BEDDING

GENERAL NOTES:

1. OVERWIDTH BEDDING SHALL BE USED WHERE THE TRENCH WIDTH AT THE UPPER LIMIT OF THE PIPE ZONE EXCEEDS THE MAXIMUM WIDTH SPECIFIED ABOVE.
2. SPECIAL ENCASEMENT SHALL BE USED WHERE COVER IS UNDER 4' OR OVER 20' AND SHALL BE IN ACCORDANCE WITH THE NATIONAL CLAY PIPE INSTITUTE GUIDELINES.
3. SEE STD. PLAN 109 FOR PAVEMENT REPAIR DETAIL.

NOTES:

(1) TRENCH WIDTH AT THE UPPER LIMIT OF THE PIPE ZONE SHALL BE PIPE O.D. PLUS 8" (MIN.)

(2) OVERWIDTH BEDDING–MAXIMUM TO BE DETERMINED IN FIELD BY THE PUBLIC WORKS INSPECTOR ON THE BASIS OF OVERWIDTH EXCAVATED.

(3) IF UNSTABLE SOIL IS ENCOUNTERED, DEVELOPER'S GEOTECHINCAL ENGINEER TO DETERMINE DEPTH OF REMOVAL AND SIZE OF FOUNDATION ROCK.

(4) IN LIEU OF THE SAND EQUIVALENT 30 MATERIAL IN THE PIPE ZONE, THE CONTRACTOR MAY EXTEND THE 3/4" MAX. CRUSHED ROCK TO THE TOP OF THE PIPE ZONE.

APPROVED:

CITY ENGINEER

REVISION DATE: May 2008

CITY OF HUNTINGTON BEACH

DEPARTMENT OF PUBLIC WORKS

V.C.P. PIPE BEDDING DETAILS

STANDARD PLAN 502

1 of 1

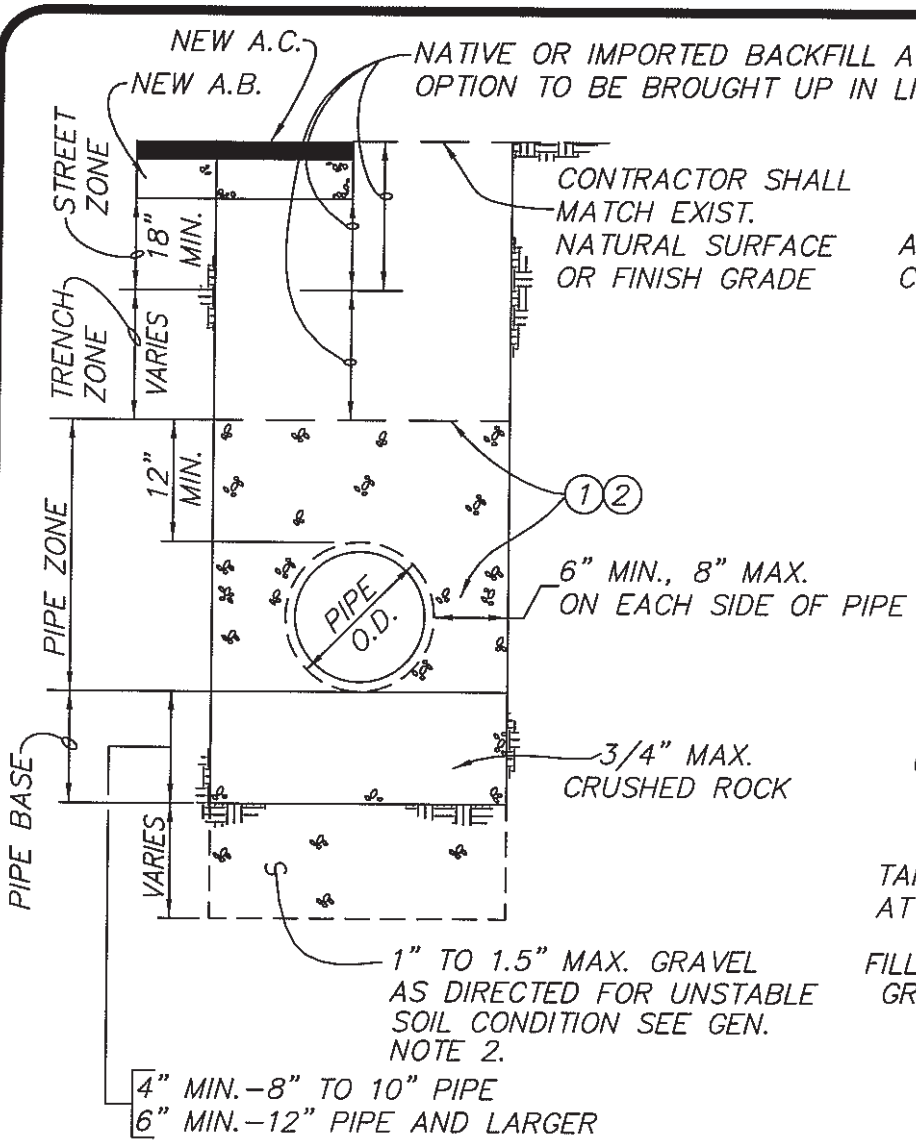

NORMAL BEDDING

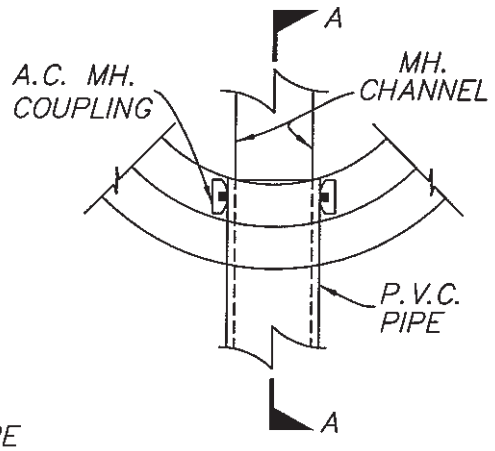

PLAN

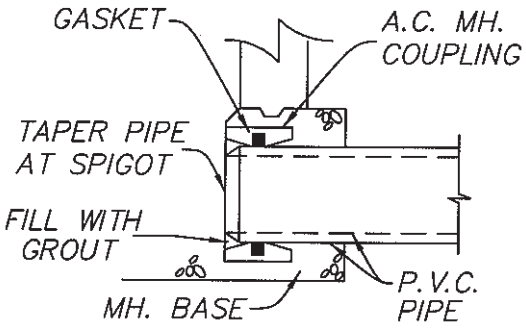

SECTION A–A

MANHOLE CONNECTION DETAILS

NOTES:

1. CONCRETE ENCASEMENT PER STD. PLAN 514 SHALL BE USED WHERE THE TRENCH WIDTH AT THE UPPER LIMIT OF THE PIPE ZONE EXCEEDS THE MAX. WIDTH (PIPE O.D. + 16") AND WHERE COVER IS UNDER 4' OR OVER 20'.
2. USE 3/4" MAX. CRUSHED ROCK IN THE PIPE ZONE.

GENERAL NOTES:

1. IF UNSTABLE SOIL IS ENCOUNTERED, DEVELOPER'S GEOTECHNICAL ENGINEER WILL DETERMINE DEPTH OF REMOVAL AND SIZE OF FOUNDATION ROCK.
2. SEE STD. PLANS 504 AND 505 FOR MANHOLE DETAILS.
3. SEE STD. PLAN 109 FOR PAVEMENT REPAIR DETAIL.

APPROVED:

CITY ENGINEER

REVISION DATE: May 2008

CITY OF HUNTINGTON BEACH

DEPARTMENT OF PUBLIC WORKS

P.V.C. PIPE BEDDING DETAILS

STANDARD PLAN 503

1 of 1

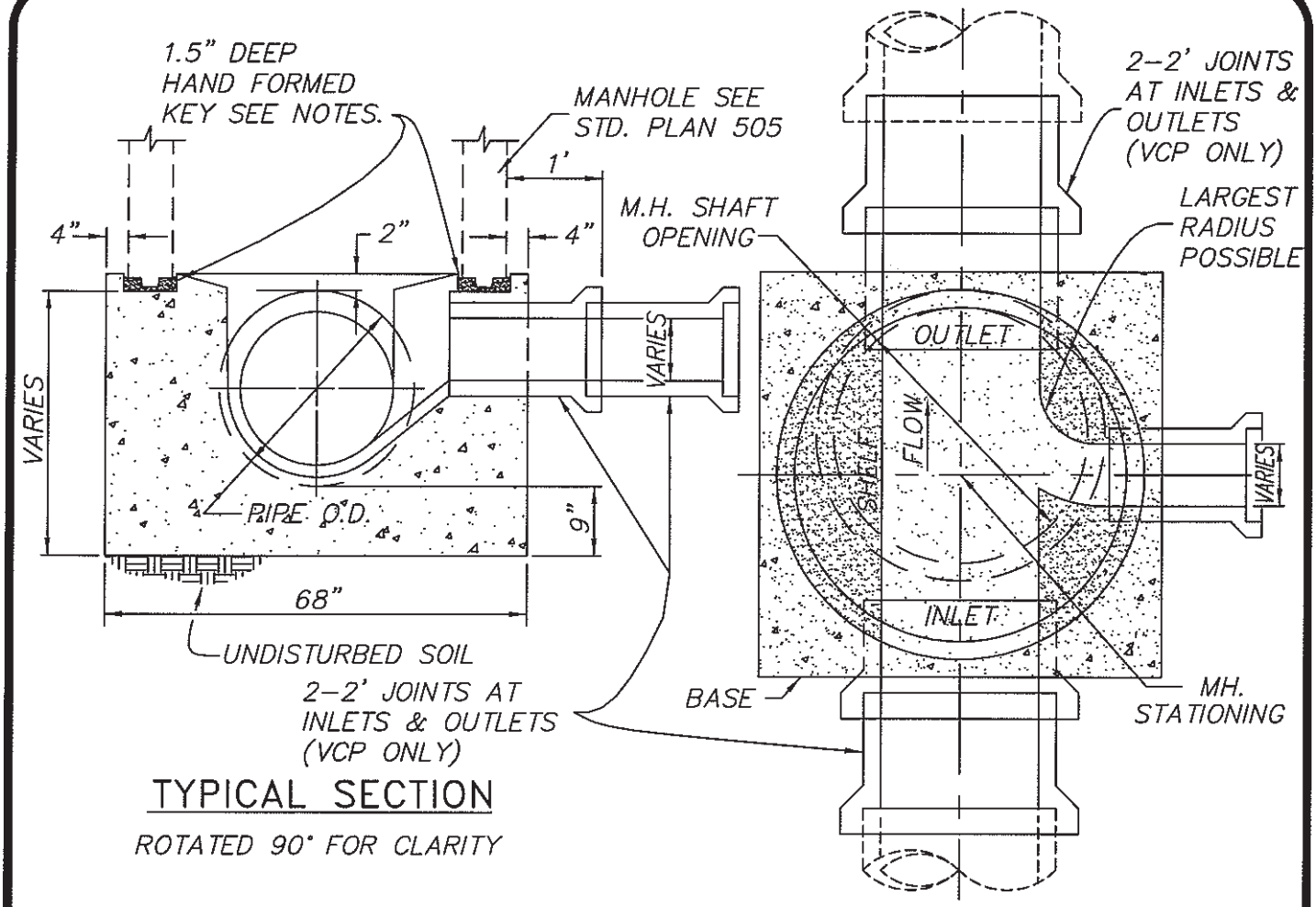

TYPICAL SECTION

ROTATED 90° FOR CLARITY

PLAN

GENERAL NOTES:

1. GROUT ALL JOINTS AND VOIDS SMOOTH AND WATER TIGHT, INSIDE AND OUT.
2. FORM KEY IN BASE AND SET M.H. IN GROUT AFTER BASE HAS SET A MINIMUM OF 24 HOURS.
3. SIDES OF BASE SHALL BE FORMED OR POURED AGAINST VERTICAL SMOOTH EARTH.
4. CROWN OF LATERAL SHALL MATCH CROWN OF MAIN.
5. MANHOLE BASE SHALL BE POURED WITH 560-C-3250 CONCRETE. FOR PRECAST MANHOLE SEE STD. PLAN 505.
6. MANHOLE SIZING SHALL BE PER STD. PLAN 500, SHEET 4 of 7, PARAGRAPH 1.10.
7. PIPE SHALL BE LAID WITH END SQUARE INTO MANHOLE BASE, UNLESS OTHERWISE NOTED. CONSTRUCT FILLET SHELF OVER PIPE TO DRAIN.
8. SEE STD. PLAN 503 FOR PVC PIPE CONNECTION DETAILS.
9. PLUG ANY UNUSED CONNECTION WITH BRICK & MORTAR.
10. 2- 2' JOINTS AT ALL INLETS AND OUTLETS FOR VCP ONLY.
11. MINIMUM DROP THROUGH MANHOLES SHALL BE 0.10'.

APPROVED:

CITY ENGINEER

REVISION DATE: MAY 2008

CITY OF HUNTINGTON BEACH

DEPARTMENT OF PUBLIC WORKS

MANHOLE CONCRETE BASE

STANDARD PLAN
504
1 of 1

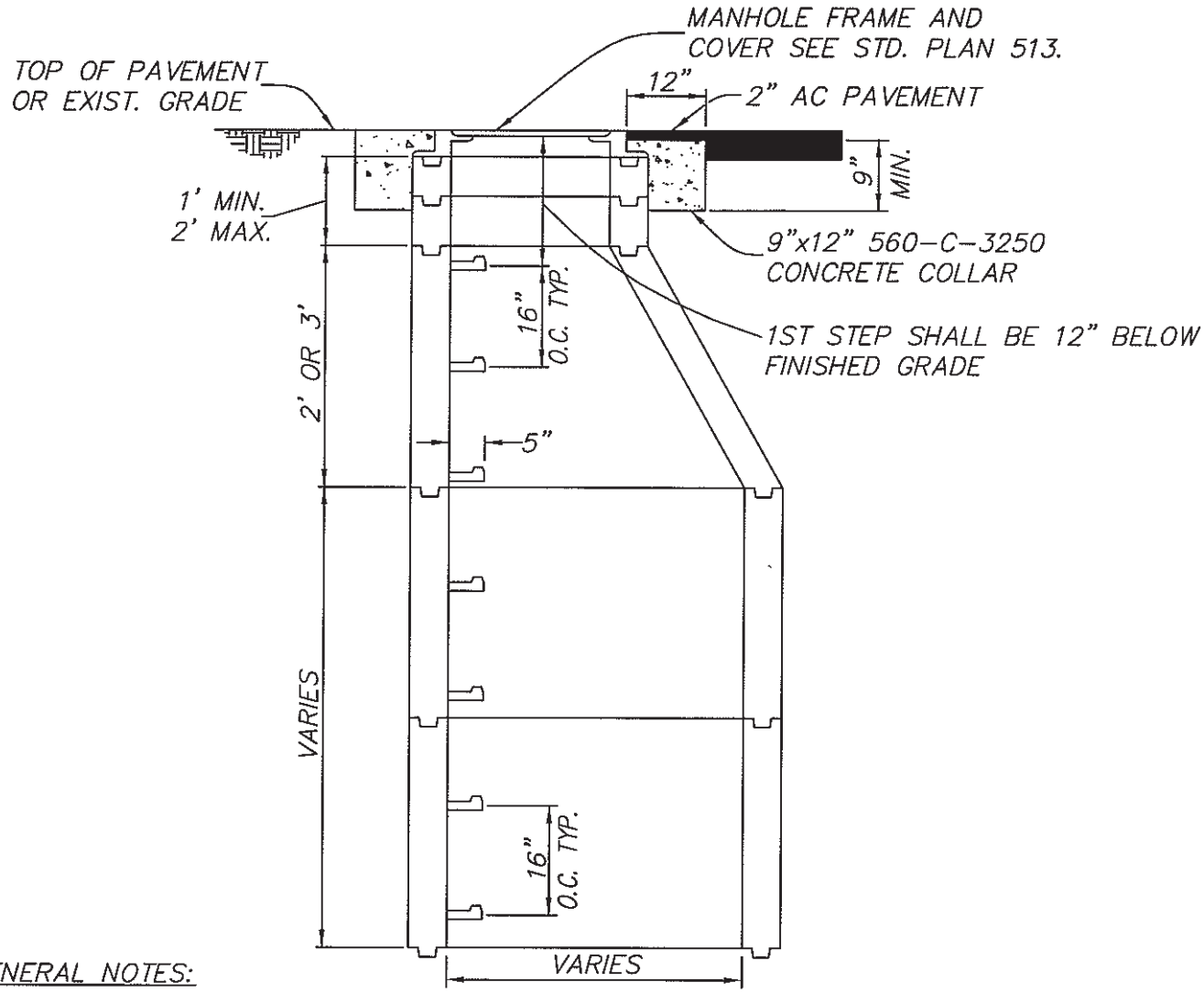

GENERAL NOTES:

1. APPROVED MANHOLE ADAPTORS REQ'D. FOR PLASTIC PIPE.
2. INSTALL MANHOLE WITH STRAIGHT SIDE DOWNSTREAM.
3. TYPE OF STEP-STEEL REINFORCED CO-POLYMER POLYPROPYLENE MANHOLE STEP TYPE PS2-PFS.
4. GROUT ALL JOINTS AND VOIDS SMOOTH AND WATER TIGHT, INSIDE AND OUT.
5. FORM KEY IN BASE AND SET M.H. IN GROUT AFTER BASE HAS SET (MIN. 24 HOURS).
6. ALL OPENINGS TO BE CONST. INTO EXISTING M.H. SHALL BE BY CORE DRILLING.
7. MANHOLE BASE SHALL BE POURED ON UNDISTURBED SOIL.
8. CONSTRUCTION SHALL BE IN ACCORDANCE WITH STANDARD SPECIFICATIONS.
9. THE MANHOLE PIPES AND GRADE RING SHALL BE ARRANGED IN ORDER OF LONGER TO SHORTER LENGTHS FROM BOTTOM TO TOP.
10. MANHOLE DETAILS SHALL BE SUBMITTED TO THE ENGINEER FOR APPROVAL.
11. MANHOLE SHALL MEET OR EXCEED THE REQUIREMENTS OF A.S.T.M. C-478 SPECIFICATIONS WHERE APPLICABLE.
12. MANHOLE SIZING SHALL BE PER STD. PLAN 500 PARAGRAPH 1.10.
13. MANHOLE SHALL BE COMPLETELY LINED WITH A POLYURETHANE COATING NO LESS THAN 125 MIL AND CONFORMING TO THE "GREEENBOOK" SECTION 500-2.4.

APPROVED:

CITY ENGINEER

REVISION DATE: MAY 2008

CITY OF HUNTINGTON BEACH

DEPARTMENT OF PUBLIC WORKS

PRECAST REINFORCED CONCRETE MANHOLE

STANDARD PLAN
505
1 of 1

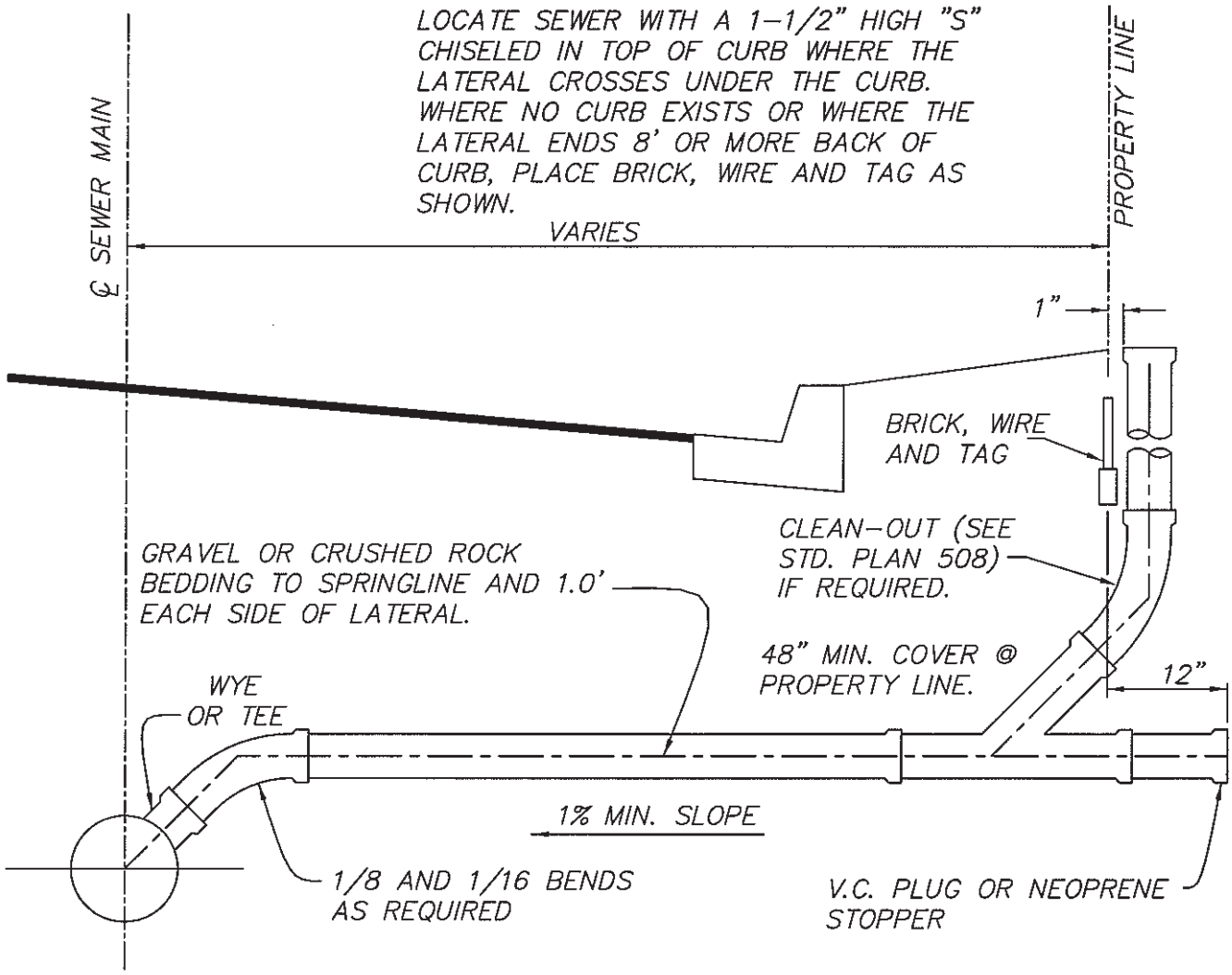

GENERAL NOTES:

1. WHERE A WYE OR TEE IS INSTALLED WITHOUT HOUSE LATERAL, A V.C. PLUG OR NEOPRENE STOPPER SHALL BE INSTALLED.
2. LATERAL SIZE TO BE DETERMINED ON THE BASIS OF THE TOTAL NUMBER OF FIXTURE UNITS DRAINED. IN NO CASE SHALL THE LATERAL BE LESS THAN 4" FOR SINGLE FAMILY RESIDENTIAL, 6" FOR COMMERCIAL, INDUSTRIAL, OR MULTI-FAMILY RESIDENTIAL.
3. THE LATERAL SHALL BE BEDDED THE SAME AS THE MAINLINE SEWER. SEE STD. PLANS 502 AND 503.
4. AS-BUILT SEWER LATERAL LOCATIONS SHALL BE FURNISHED TO THE PUBLIC WORKS INSPECTOR ON FORMS PROVIDED PRIOR TO FINAL APPROVAL OF WORK, AND SHALL BE SHOWN ON PLANS.
5. AT ALL WATER MAIN CROSSINGS REFER TO STD. PLAN 501 AND H.B. MUNICIPAL WATER DIVISION SPECIAL CONDITIONS.
6. FOR CUT IN WYE OR SADDLE CONNECTION SEE STD. PLANS 510 AND 511 RESPECTIVELY.
7. WHEN CONNECTING TO AN EXISTING MAIN WHICH HAS BEEN LINED, SEE STD. PLAN 516.

APPROVED:

CITY ENGINEER

REVISION DATE: MAY 2008

CITY OF HUNTINGTON BEACH

DEPARTMENT OF PUBLIC WORKS

TYPICAL SEWER LATERAL

STANDARD PLAN 507

1 of 1

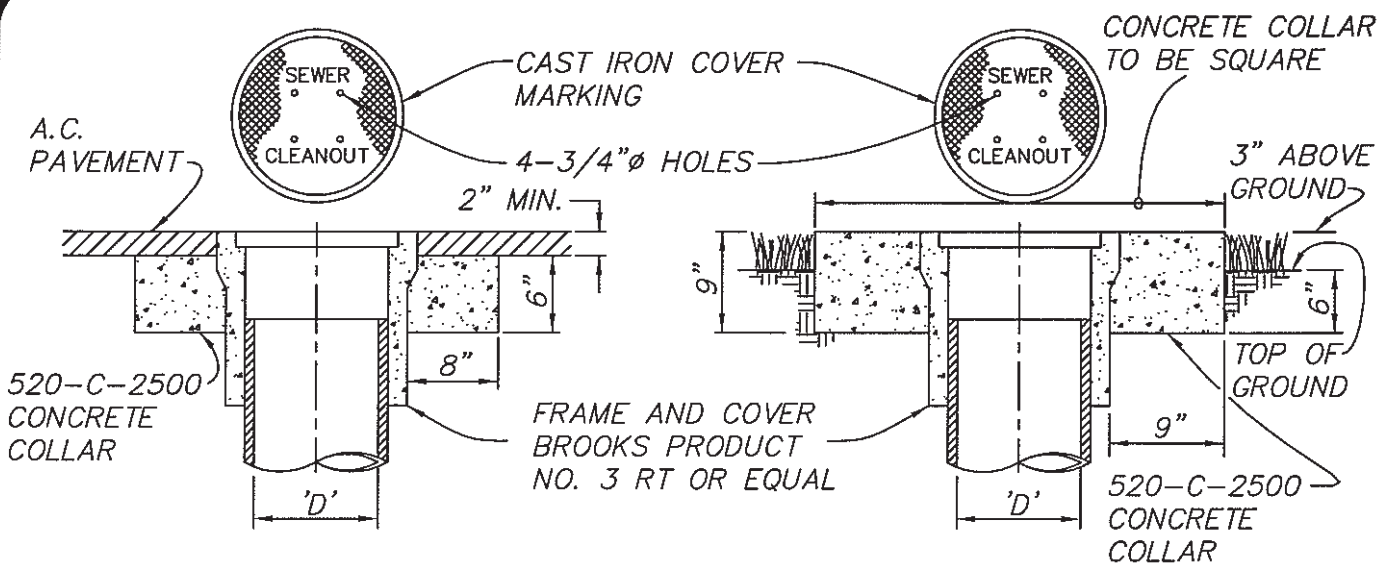

PAVED AREA

GRASS AREA

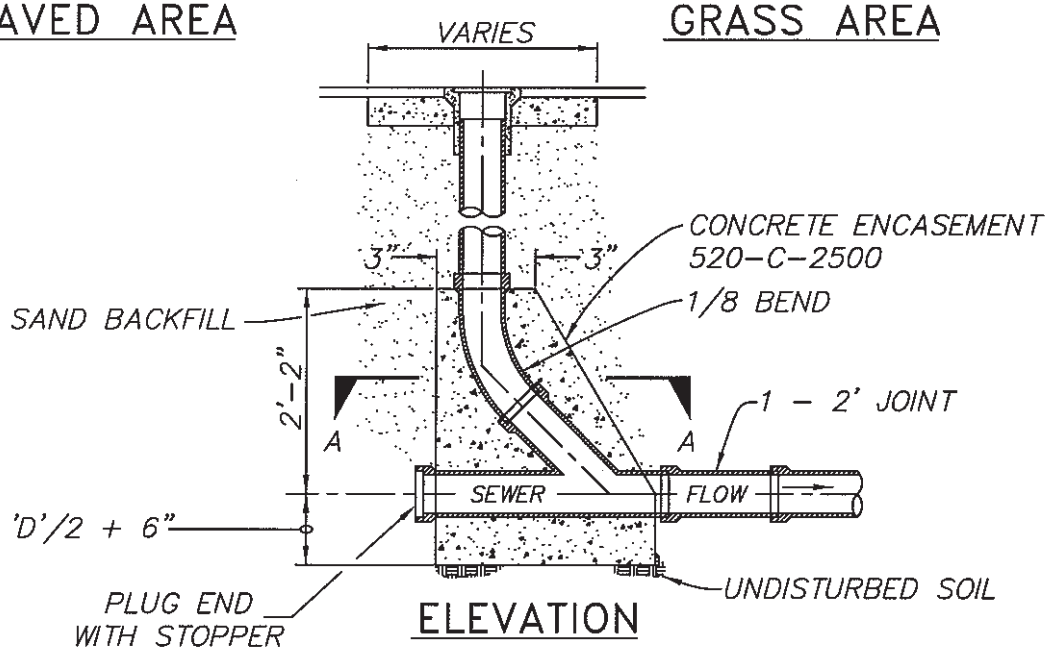

ELEVATION

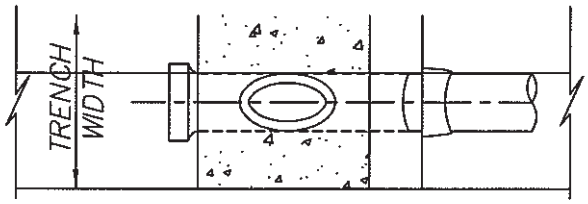

SECTION A-A

GENERAL NOTES:

1. CLEANOUT PIPE TO BE SAME SIZE AND KIND OF MATERIAL AS MAIN.

APPROVED:

CITY ENGINEER

REVISION DATE: MAY 2008

CITY OF HUNTINGTON BEACH

DEPARTMENT OF PUBLIC WORKS

STANDARD CLEAN-OUT SECTION

STANDARD PLAN 508

1 of 1

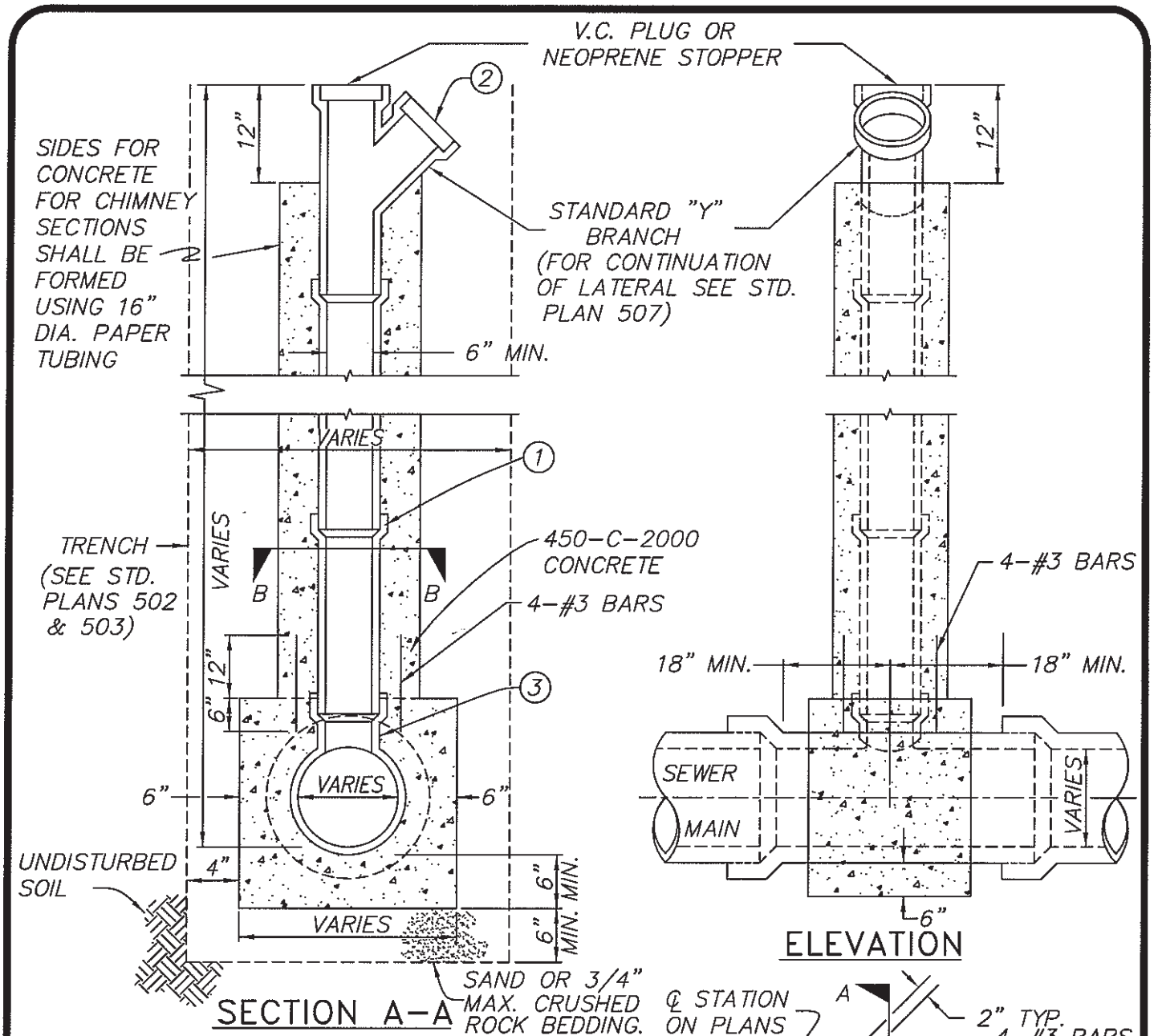

GENERAL NOTES:

1. RISER PIPE AND FITTINGS SHALL BE OF THE SAME MATERIAL AS THE MAIN LINE SEWER.
2. LATERAL INLET INTO CHIMNEY TO BE NOT LESS THEN 6' BELOW GRADE.
3. IF THE RISER INSIDE DIAMETER IS EQUAL TO 1/2 THE MAIN LINE'S INSIDE DIAMETER THE CONTRACTOR SHALL CORE DRILL FOR SADDLE CONNECTION. IF THE RISER DIAMETER IS GREATER THAN 1/2 OF THE MAIN LINE DIAMETER THE CONTRACTOR SHALL USE A CUT IN TEE CONNECTION.
4. TAPPING WILL NOT BE PERMITTED.

APPROVED:

CITY ENGINEER

REVISION DATE: MAY 2008

CITY OF HUNTINGTON BEACH

DEPARTMENT OF PUBLIC WORKS

SEWER CHIMNEY PIPE

(USE REQUIRES CITY ENGINEER APPROVAL)

STANDARD PLAN 509

1 of 1

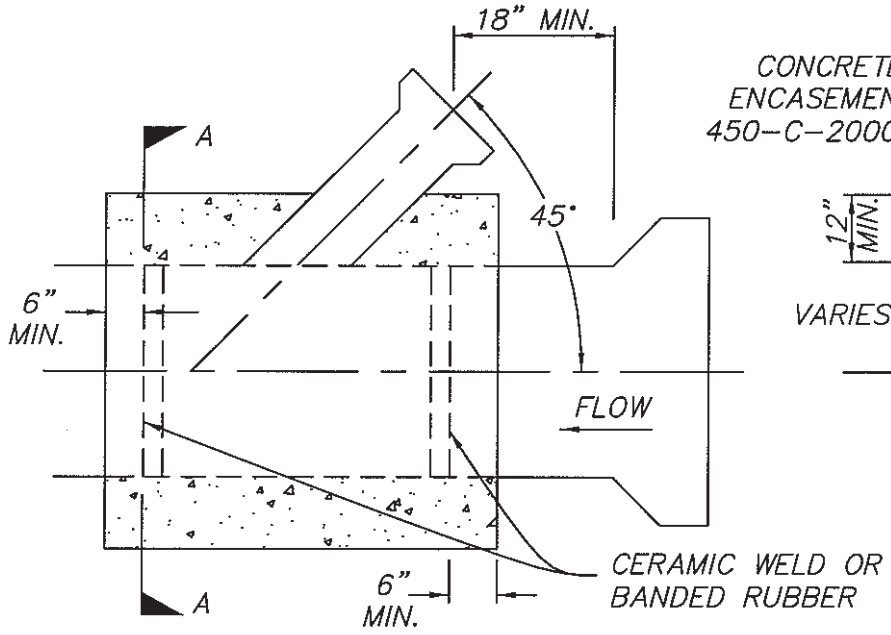

ELEVATION

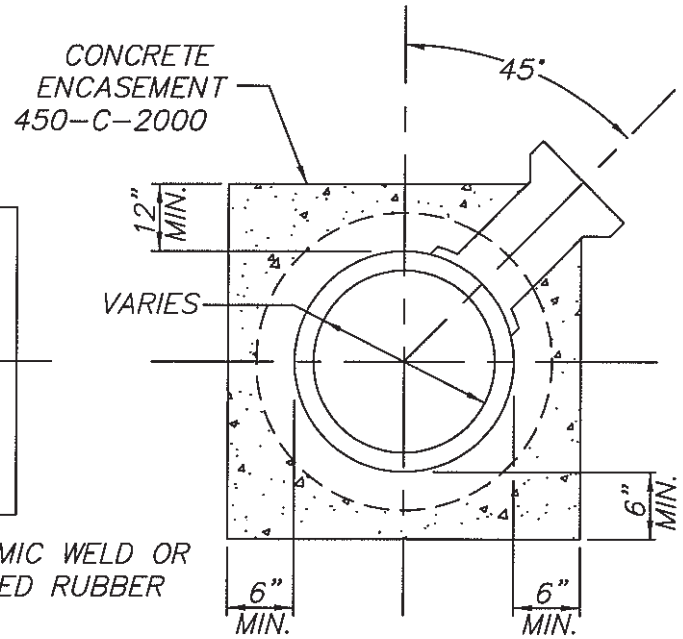

SECTION A-A

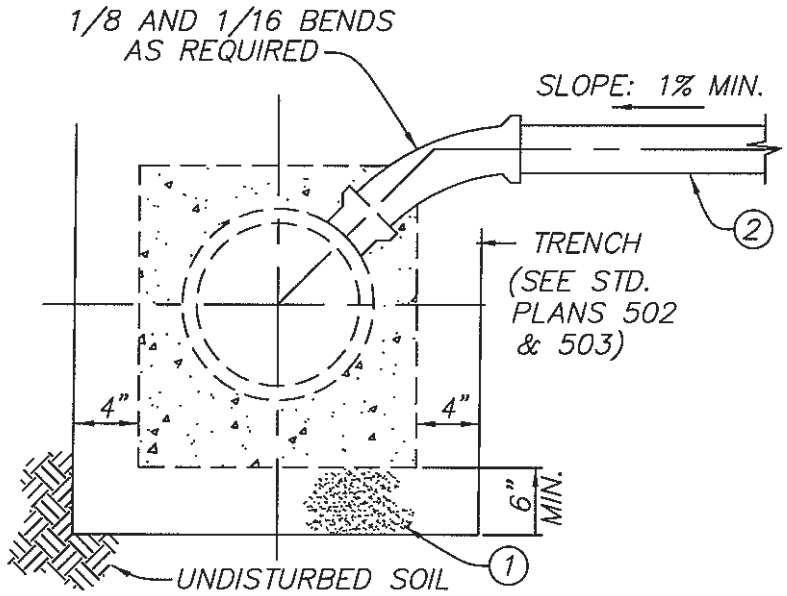

GENERAL NOTES:

1. 6" MINIMUM SAND OR 3/4" MAX. CRUSHED ROCK BEDDING.
2. FOR CONTINUATION OF LATERAL SEE STD. PLAN 507.
3. IF SEWER MAIN DEPTH IS GREATER THAN 10', INSTALL CHIMNEY PER STD. PLAN 509, WITH CITY ENGINEER APPROVAL.

APPROVED:

CITY ENGINEER

REVISION DATE: MAY 2008

CITY OF HUNTINGTON BEACH

DEPARTMENT OF PUBLIC WORKS

CUT IN WYE CONNECTION

STANDARD PLAN 510

1 of 1

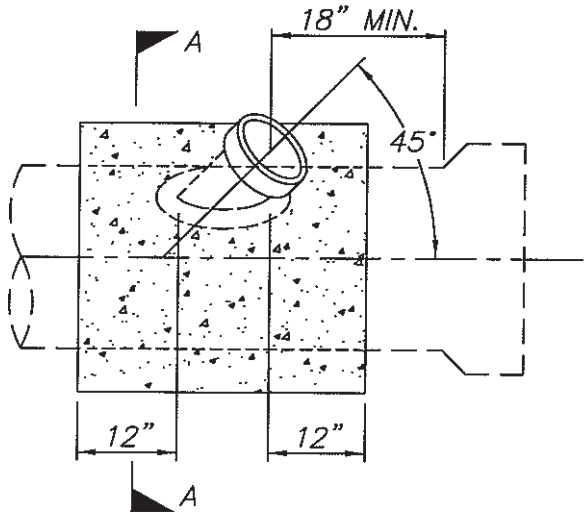

COLLAR WYE SADDLE

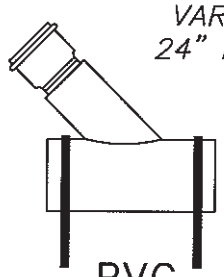

PVC

FLEXIBLE SADDLE
W/ 316 SS STRAPS

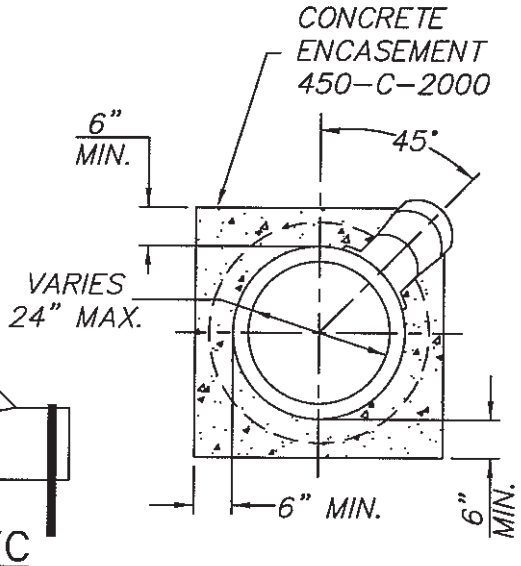

SECTION A-A

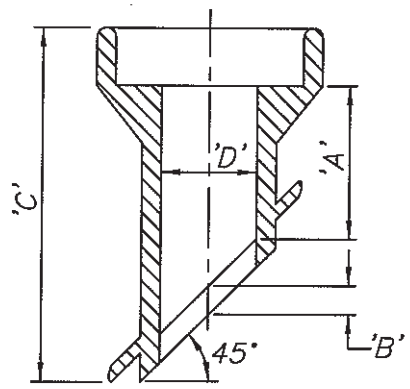

CLAY

CLAY			
LATERAL DIA. 'D'	'A'	'B'	'C'
4"	2-1/2"	1-1/2"	6-1/2"
6"	3"	1-1/2"	9"
CLAY OR PVC			
8" & UP	CONNECTION BY STD. MANHOLE		

GENERAL NOTES:

1. THE HOLE FOR THE COLLAR WYE OR TEE FITTING FOR A SEWER SADDLE SHALL BE MADE BY CORE DRILLING. THE HOLE SHALL BE CLEANLY MACHINED AND IF NECESSARY WORKED BY HAND WITH A RASP OR SANDED TO ACCOMPLISH A TRUE AND NEAT OPENING FOR THE COLLAR WYE.
2. THE CONTRACTOR SHALL SECURE THE COLLAR WYE OR TEE SADDLE TO THE SEWER WITH EPOXY RESIN PROVIDED BY THE PIPE MANUFACTURER (CLAY) OR STRAPS (PVC).
3. AFTER THE CONNECTION IS APPROVED BY THE PUBLIC WORKS INSPECTOR, THE CONTRACTOR SHALL CONCRETE ENCASE THE SADDLE CONNECTION AS SHOWN HEREON.
4. THE CONTRACTOR SHALL KEEP ALL CHIPS, DIRT, EPOXY, MORTAR, AND CONCRETE OUT OF THE SEWER SADDLE, AND SHALL PERFORM A CLEANING AND BALLING OF THE REACH SADDLED IF DIRECTED TO DO SO BY THE PUBLIC WORKS INSPECTOR.
5. THE CONTRACTOR SHALL REPAIR OR REPLACE ANY DAMAGED PIPE AS DIRECTED BY THE PUBLIC WORKS INSPECTOR.
6. THE BELL ON THE COLLAR WYE SADDLE SHALL NOT BE ENCASED IN CONCRETE.
7. CORE DRILLING TO BE MADE AT APPROX. CENTER LINE OF JOINT.
8. FOR CONTINUATION OF LATERAL SEE STD. PLAN 507.

APPROVED:

CITY ENGINEER

REVISION DATE: MAY 2008

CITY OF HUNTINGTON BEACH

DEPARTMENT OF PUBLIC WORKS

SEWER SADDLE CONNECTION

STANDARD PLAN
511
1 of 1

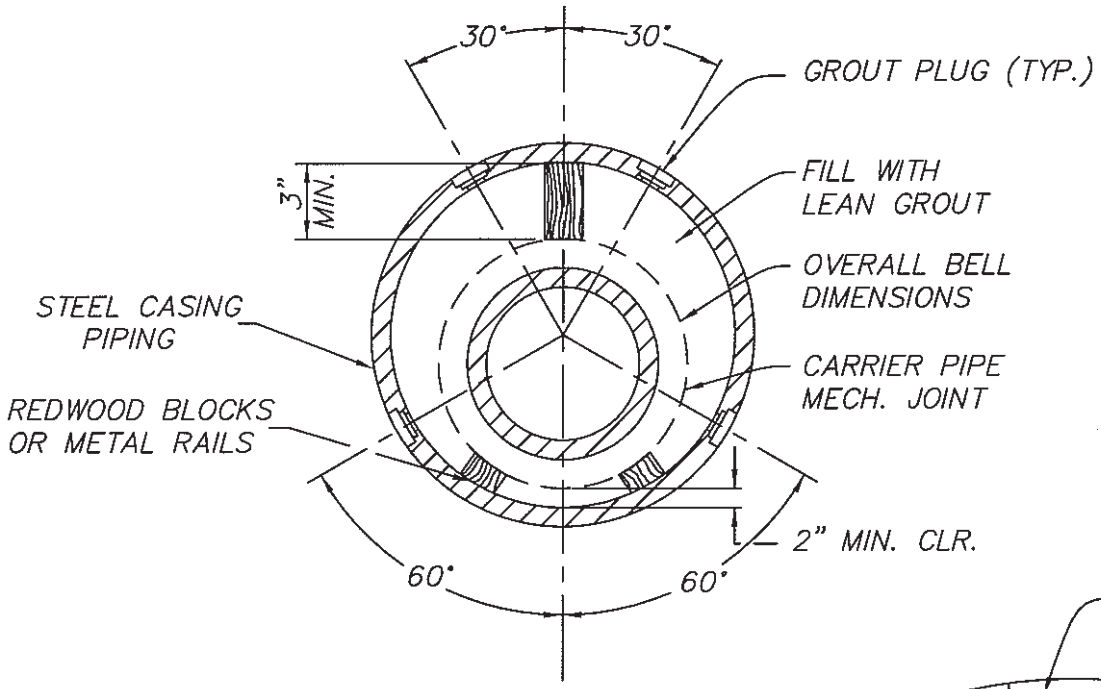

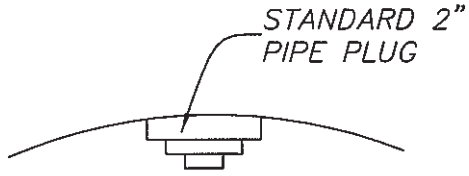

GROUT PLUG DETAIL

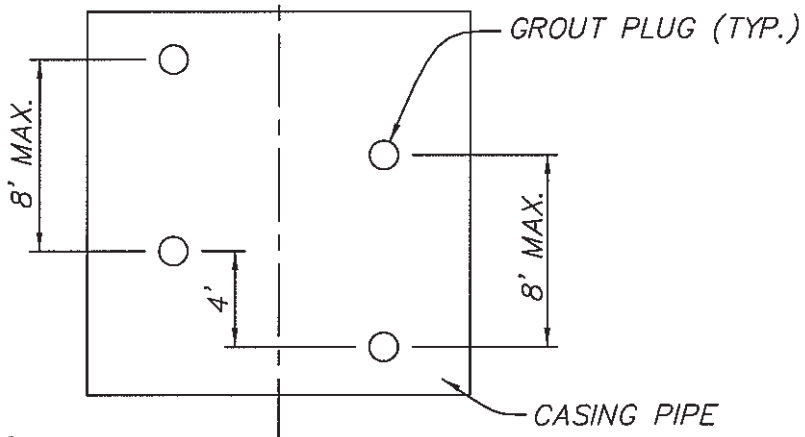

GENERAL NOTES:

1. ALL STEEL CASING PIPE FIELD JOINTS SHALL BE WELDED FULL CIRCUMFERENCE.
2. PERIPHERY OF CASING TO BE PRESSURE GROUTED.
3. CARRIER PIPE SHALL BE AIR TESTED PRIOR TO FILLING CASING WITH GROUT.
4. UPSTREAM AND DOWNSTREAM ELEVATIONS OF CARRIER PIPE TO BE VERIFIED PRIOR TO FILLING CASING.

APPROVED:

CITY ENGINEER

REVISION DATE: MAY 2008.

CITY OF HUNTINGTON BEACH

DEPARTMENT OF PUBLIC WORKS

STEEL CASING PIPE

STANDARD PLAN 512

1 of 1

NO.	'A'	'B'	'C'
A–1170	22.5"	33.5"	6"
A–1480	34.5"	43.5"	4.75"

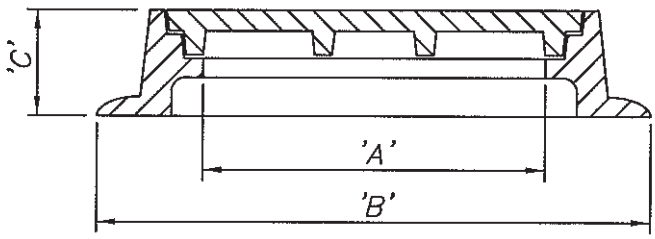

SECTION A–A

GENERAL NOTES:

1. 24" COVER & FRAME ALHAMBRA NO. A–1170 OR APPROVED EQUAL WEIGHT 470 LBS.
2. 36" COVER & FRAME ALHAMBRA NO. A–1480 OR APPROVED EQUAL WEIGHT 610 LBS.
3. FRAME & COVER SHALL BE A GOOD FIT & NOT RATTLE.

NOTE: APPROVED EQUALS TO THE ALHAMBRA A–1170:
NORFOLK – NC–170
SOUTHBAY – SBF1170 OR A22
L.B. IRON – X–115A

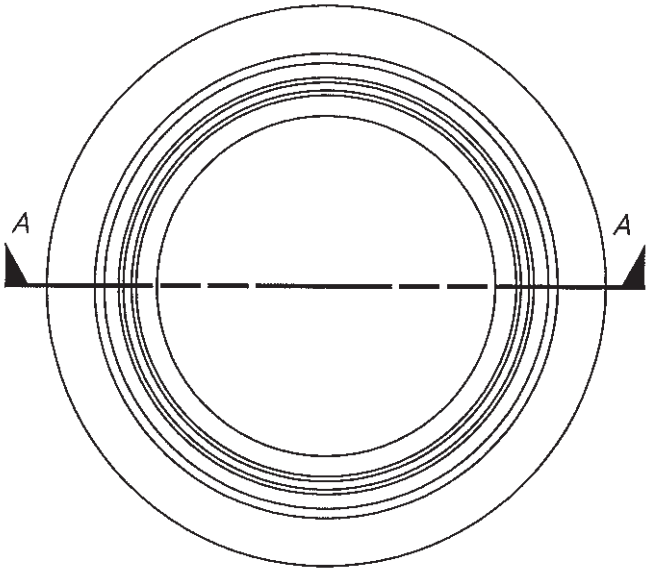

PLAN OF FRAME

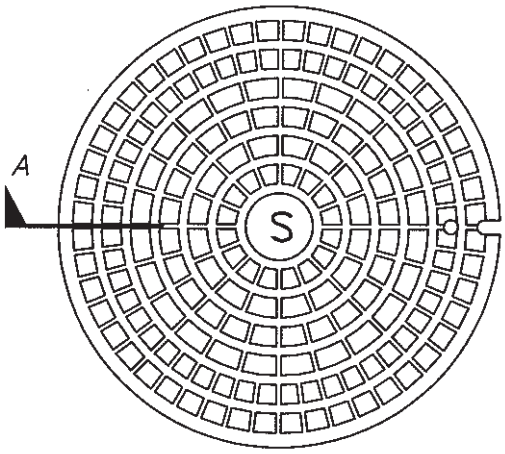

TOP VIEW

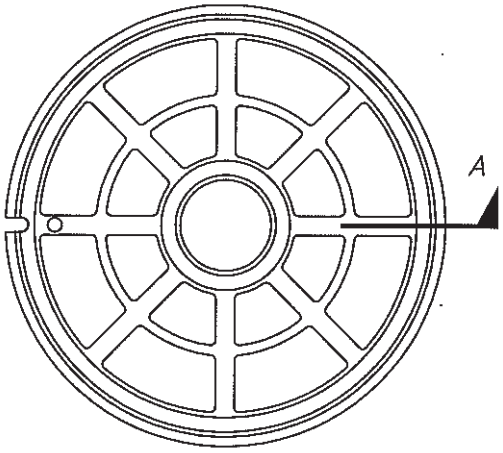

BOTTOM VIEW

PLAN OF COVER

APPROVED:

CITY ENGINEER

REVISION DATE: MAY 2008

CITY OF HUNTINGTON BEACH

DEPARTMENT OF PUBLIC WORKS

STANDARD SEWER MANHOLE COVER AND FRAME

STANDARD PLAN 513

1 of 1

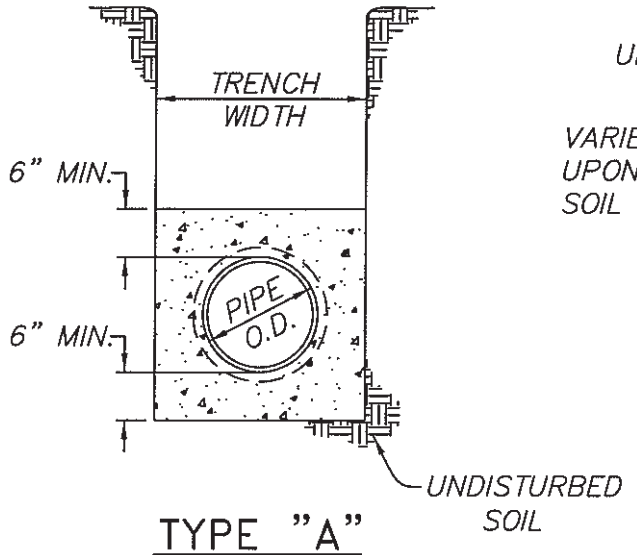

TYPE "A"

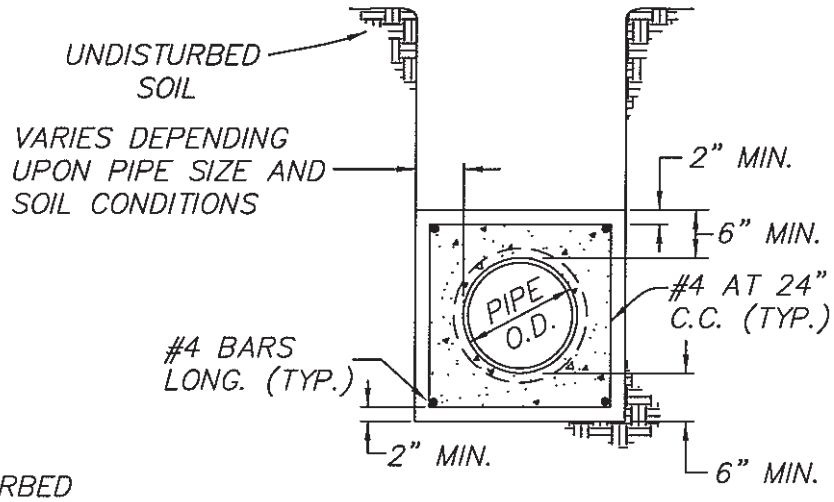

TYPE "B"

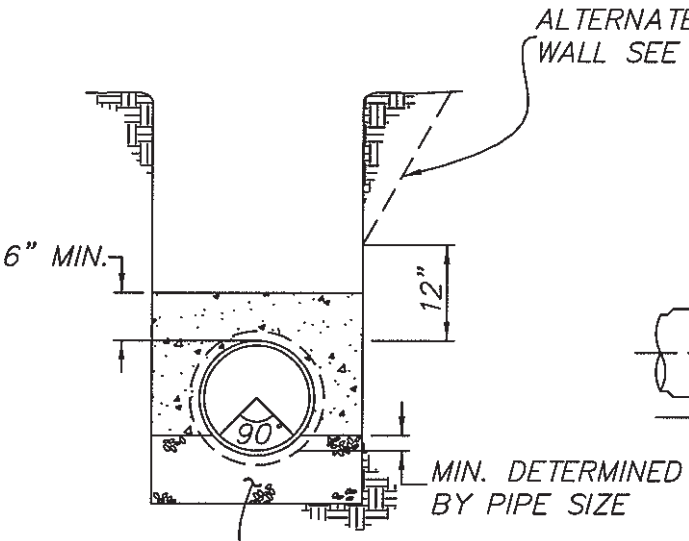

TYPE "C"

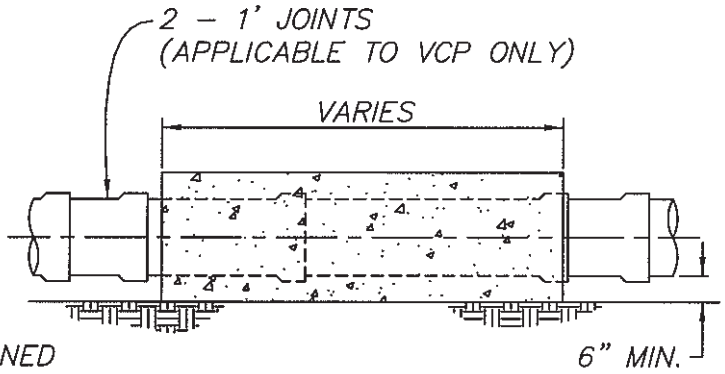

SECTION

GENERAL NOTES:

1. CONCRETE ENCASEMENT SHALL BE USED WHEN COVER IS UNDER 4' OR OVER 20'.
2. ENCASEMENT TO BE PLACED AGAINST UNDISTURBED NATURAL GROUND OR FILL COMPACTED TO 90% RELATIVE DENSITY.
3. NO. 4 STEEL REINFORCING BARS SHALL BE USED AS SPECIFIED.
4. TYPE OF CONCRETE ENCASEMENT TO BE USED WILL BE SHOWN ON PLANS OR AS SPECIFIED BY THE PUBLIC WORKS INSPECTOR TO MEET UNFORESEEN FIELD CONDITIONS.
5. WHERE SLOPE TRENCHES ARE USED, WALLS WILL NOT BEGIN TO SLOPE CLOSER THAN 12" FROM THE TOP OF THE PIPE.
6. ENCASEMENT CONCRETE SHALL BE 450–C–2000.
7. CONCRETE ENCASEMENT SHALL NOT BE PLACED AROUND A.C. PIPE.
8. FOR V.C.P. ENCASEMENT, REFER TO STD. 502.

APPROVED:

CITY ENGINEER

REVISION DATE: MAY 2008

CITY OF HUNTINGTON BEACH

DEPARTMENT OF PUBLIC WORKS

CONCRETE ENCASEMENT TYPE "A", "B" AND "C"

STANDARD PLAN 514

1 of 1

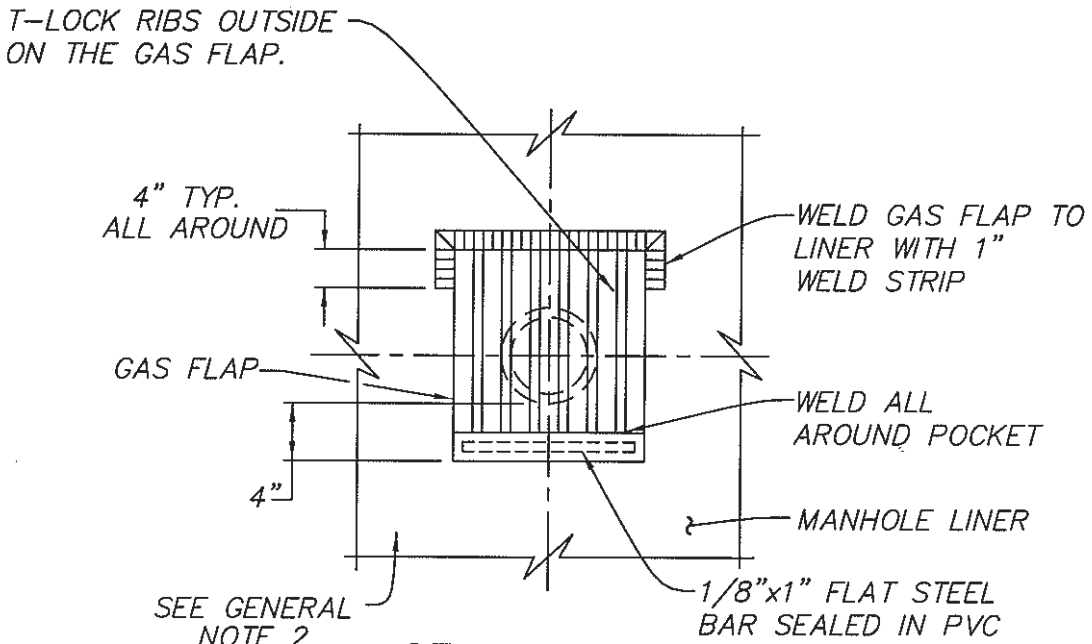

SECTION C-C

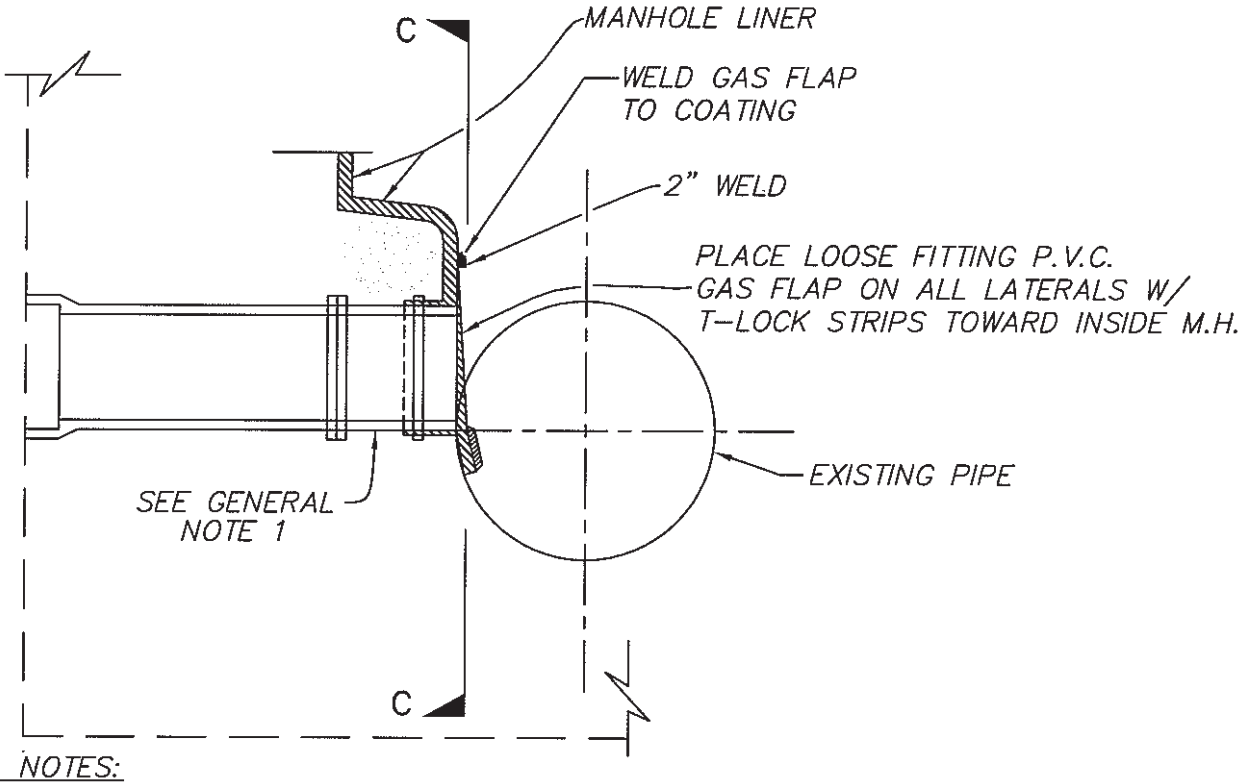

GENERAL NOTES:

1. FOR INSTALLATION AT EXISTING M.H., REMOVE INTERFERING CONCRETE AT END OF EACH LATERAL AND EXTEND PIPE AS SHOWN. GROUT IN PLACE. EXTEND COATING OVER GROUT AND INSTALL GAS FLAP AS SHOWN.
2. LINER SHALL MEAN POLYURETHANE LINER

APPROVED:

CITY ENGINEER

REVISION DATE: MAY 2008

CITY OF HUNTINGTON BEACH

DEPARTMENT OF PUBLIC WORKS

GAS FLAP

STANDARD PLAN 515

1 of 1

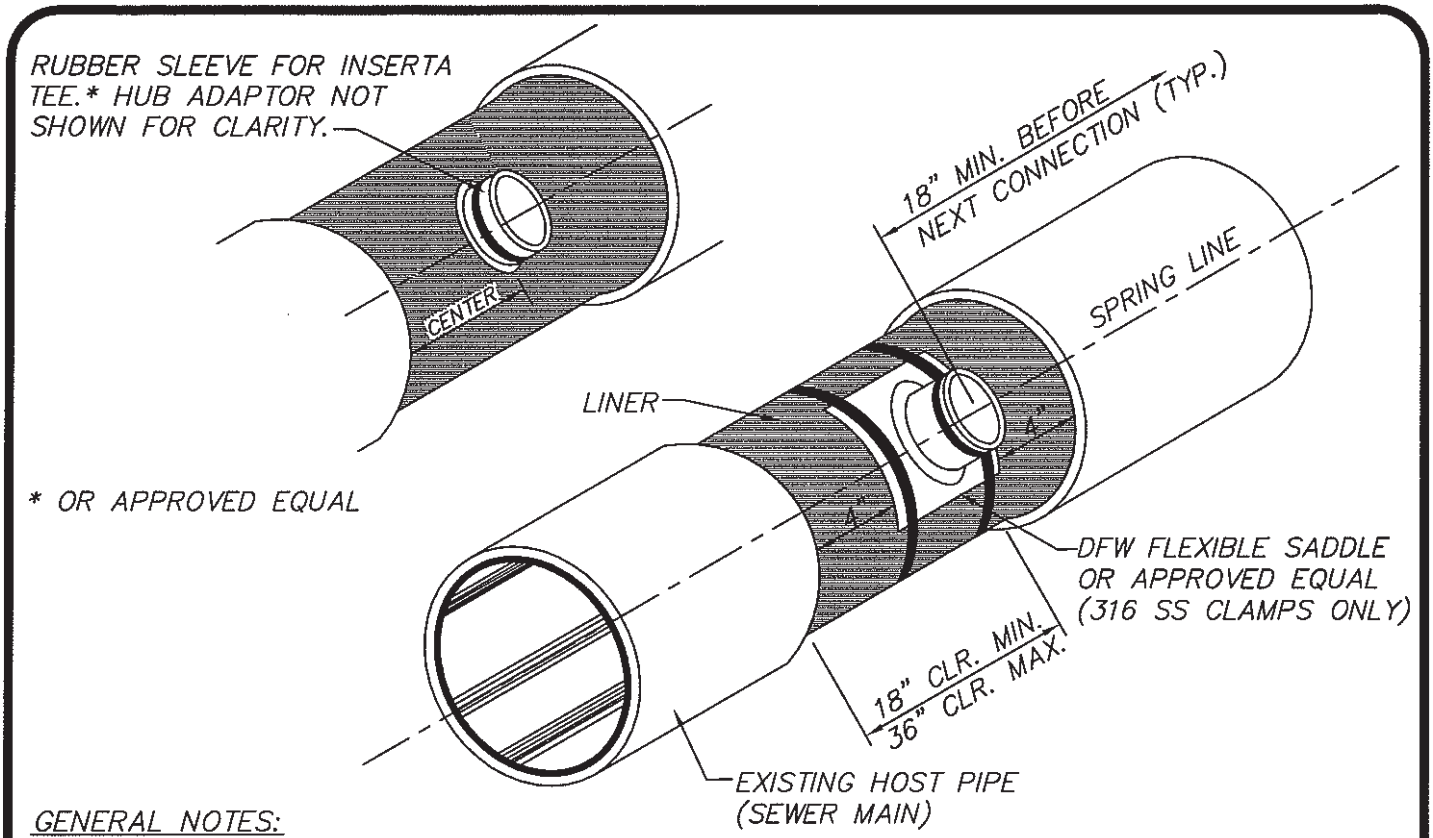

GENERAL NOTES:

1. TO BE USED ONLY WHEN A LATERAL (4"–6") IS TO BE CONNECTED TO AN EXISTING SEWER MAIN (8"–15") THAT HAS BEEN LINED PER SECTION 500 OF THE GREEN BOOK.
2. FOR CONTINUATION OF LATERAL SEE STD. PLAN 507.
3. LATERALS SHALL BE SPACED APART BY A MIN. OF 18" ON CENTER UNLESS OTHERWISE APPROVED BY THE DIRECTOR OF PUBLIC WORKS.
4. THE HOLE FOR THE LINER TAPPING SLEEVE FOR THE SEWER LATERAL SHALL BE MADE BY CORE DRILLING. THE HOLE SHALL BE CLEANLY MACHINED AND IF NECESSARY WORKED BY HAND WITH A RASP OR SANDED TO ACCOMPLISH A TRUE AND NEAT OPENING FOR THE SADDLE. (REMOVE AND SAVE ALL CORINGS AND DELIVER TO PUBLIC WORKS INSPECTOR.)
5. UPON APPROVAL OF CONNECTION BY THE PUBLIC WORKS INSPECTOR, THE CONTRACTOR SHALL CONCRETE ENCASE THE CONNECTION PER THE GREENBOOK, 6" THICK MIN. AND OVERLAPPING THE HOST PIPE 6" MIN.
6. THE CONTRACTOR SHALL KEEP ALL CHIPS, DIRT, MORTAR, AND CONCRETE OUT OF THE SEWER SADDLED, AND SHALL PERFORM A CLEANING AND BALLING OF THE REACH SADDLED IF DIRECTED TO DO SO BY THE PUBLIC WORKS INSPECTOR.
7. THE CONTRACTOR SHALL REPAIR OR REPLACE ANY DAMAGED PIPE AS DIRECTED BY THE PUBLIC WORKS INSPECTOR.
8. CONNECTION SHALL BE BETWEEN SOFFIT AND SPRING LINE OF MAIN UNLESS OTHERWISE APPROVED BY THE DIRECTOR OF PUBLIC WORKS.
9. CONTRACTOR SHALL EXPOSE LINER BY USING A PIPE CUTTER TO SNAP EXISTING VCP TO A CLEAN STRAIGHT EDGE.
10. THE PUBLIC WORKS INSPECTOR SHALL APPROVE THE PROPOSED TAPPING SLEEVE PRIOR TO INSTALLATION.

APPROVED: CITY ENGINEER REVISION DATE: MAY 2008	CITY OF HUNTINGTON BEACH DEPARTMENT OF PUBLIC WORKS TAPPING SLEEVE FOR "LINED" SEWER MAIN	STANDARD PLAN 516 1 of 1

1. THE CONTRACTOR SHALL SELECT ONE OF THE FOLLOWING SEAMLESS, JOINTLESS, TIGHT FITTING LINER SYSTEMS LISTED BELOW FOR THE REHABILITATION OF THE EXISTING SEWER LINE.

LINER SYSTEMS ALLOWED:

TRADE NAME	GREENBOOK SECTION*	PROCESS
INSITUFORM, WESCO	500-1.4 TYPE A	CURED-IN-PLACE LINER (CIPP LINER)
INSITUFORM, INLINER, WESCO	500-1.4 TYPE B	CURED-IN-PLACE LINER (CIPP LINER)
NUPIPE, EX PIPE	500-1.10 TYPE A	FOLDED AND RE-FORMED PVC PIPE LINER
AM-LINER	500-1.10 TYPE B	FOLDED AND RE-FORMED PVC PIPE LINER

*SHALL COMPLY WITH THE GREENBOOK.

2. INSTALLATION OF THE SEWER LINING SHALL BE PERFORMED BY A CONTRACTOR LICENSED BY THE MANUFACTURER/OWNER OF THE PROCESS. CONTRACTORS ARE REQUIRED TO SUBMIT COPIES OF SUCH LICENSES WHEN OBTAINING A PERMIT FOR RIGHT-OF-WAY ENCROACHMENT.

TABLE A: MINIMUM PIPE LINER WALL THICKNESS:

NOMINAL ID OF ORIGINAL/ HOST PIPE* (INCHES)	8	10	12	15
DIMENSION RATIO (DR)	35	35	35	35
LINER THICKNESS (INCHES)	0.225	0.280	0.336	0.420

*ID'S NOT LISTED REQUIRE CITY ENGINEER'S APPROVAL.

3. CURED-IN-PLACE LINER (CIPP) DESIGNS SHALL USE MINIMUM OF 15% EXTRA THICKNESS TO COMPENSATE FOR RESIN MIGRATION/SEAL FACTOR TO FILL JOINTS, CRACKED OR DETERIORATED PIPELINES UNLESS A HIGHER % IS REQUIRED BY THE MANUFACTURER TO MAINTAIN THE MINIMUM WALL THICKNESS SPECIFIED IN TABLE A.
4. THE CONTRACTOR SHALL FIELD VERIFY THE PIPE DIAMETER AT THE MANHOLES AND LENGTHS PRIOR TO ORDERING LINER MATERIALS.
5. THE CONTRACTOR SHALL USE HIGH-VELOCITY HYDRAULIC (HYDRO-CLEANING) EQUIPMENT TO CLEAN THE PIPELINES BEFORE THE PRE-LINING VIDEO INSPECTION.
6. THE CONTRACTOR SHALL USE A VACUUM TRUCK TO PICK-UP ALL DEBRIS BEFORE IT CONTINUES DOWN STREAM AND INTO SEWER MAINS WHICH ARE NOT INTEND TO BE REHABILITATED.
7. THE CONTRACTOR SHALL UTILIZE A TEMPORARY BYPASS SYSTEM FOR THE SEWER FLOW DURING THE LINING PROCESS.
8. CCTV INSPECTION SHALL BE PERFORMED UTILIZING A ROTATING-LENS VIDEO CAMERA SYSTEM.
9. ALL ORIGINAL VIDEO MEDIA SHALL BE SUBMITTED TO AND BECOME THE PROPERTY OF THE CITY.

APPROVED:

CITY ENGINEER

REVISION DATE: MAY 2008

CITY OF HUNTINGTON BEACH

DEPARTMENT OF PUBLIC WORKS

TRENCHLESS PIPELINE REHABILITATION DESIGN CRITERIA

STANDARD PLAN 517

10. THE PRE-LINING VIDEO INSPECTION AND RECORDING PERFORMED SHALL STOP AT EACH LATERAL AND THE HEAD ROTATED TO LOOK UP THE LATERAL TO IDENTIFY IF THE LATERAL IS ACTIVE, PLUGGED OR HAS ROOTS THAT COULD INTERFERE WITH THE COMPLETE REINSTATEMENT.

11. THE PRE-LINING AND POST-LINING VIDEO WILL BE PERFORMED WHILE THE UPSTREAM LINES ARE PLUGGED OR BYPASSED. THE LINE SHALL BE DRY EXCEPT FOR FLOW FROM THE LATERALS IN THE SECTION OF THE LINE BEING TELEVISED.

12. ALL PROTRUDING LATERALS THAT ARE ENCOUNTERED DURING THE PRE-LINING VIDEO SHALL BE GROUND AS CLOSE TO FLUSH WITH THE HOST PIPE'S INTERIOR AS PRACTICABLE PRIOR TO INSERTION OF THE LINER.

13. ALL PLUGGED SERVICE CONNECTIONS IDENTIFIED IN THE PRE-LINING VIDEO SHALL NOT BE OPENED UNLESS SPECIFICALLY DIRECTED BY THE CITY INSPECTOR.

14. THE LATERAL OPENING CUTS SHALL CONFORM TO THE SHAPE AND SIZE OF THE INSIDE DIAMETER OF THE EXISTING SERVICE CONNECTION.

15. THE CONTRACTOR SHALL BE RESPONSIBLE FOR MAKING POINT REPAIRS IDENTIFIED IN THE PRE-LINING VIDEO PRIOR TO INSERTION OF THE LINER.

16. THE LINING MATERIAL SHALL BE CONTINUOUS AND OF SUFFICIENT LENGTH TO EXTEND THE ENTIRE REACH (FROM ENTRY TO END OR EXIT POINT) TO BE REHABILITATED. NO JOINTS OR LAPS WILL BE PERMITTED BETWEEN MANHOLES.

17. ONE 8 INCH LONG CURED SAMPLE SHALL BE TAKEN FROM THE DOWN STREAM MANHOLE AND CHECKED BY THE CITY INSPECTOR TO VERIFY THE MINIMUM WALL THICKNESS.

18. THE CONTRACTOR SHALL PREVENT THE LINER FROM EXTENDING INTO SEWER MAINS WHICH ARE NOT INTENDED TO BE REHABILITATED.

19. THE CURED LINER SHALL HAVE A SMOOTH FINISH INSIDE. ANY ROUGHNESS THAT MAY AFFECT THE HYDRAULIC CONDITIONS SHALL BE REMOVED BY SANDING OR TRIMMING THE "FINS" OR FOLDS. THE CONTRACTOR MAY EITHER APPLY A SEALANT COMPATIBLE WITH THE MATERIAL TO AREAS WHERE SANDING HAS TAKEN PLACE OR RELINE FROM MANHOLE TO MANHOLE AS DIRECTED BY THE CITY INSPECTOR.

20. AFTER INSTALLATION, THE LINER SHALL BE CUT-OFF IN THE MANHOLE. THE FINISHED LINER SHALL NOT PROTRUDE INTO THE MANHOLE OVER 2". IF THE MANHOLE HAS BEEN LINED THROUGH, THE TOP HALF OF THE LINER PIPE MAY BE CUT-OFF EVEN WITH THE TOP OF THE SHELF LEAVING THE CHANNEL LINED.

21. ALL NEW LATERALS/SERVICE CONNECTIONS SHALL BE MADE PER STANDARD PLAN 516.

GENERAL NOTES:

1. UTILITY BOX SIZE AND MATERIAL SHALL PER UTILITY COMPANY STANDARDS. IF UTILITY BOXES ARE LOCATED IN THE SIDEWALK, REPLACE FULL WIDTH OF SIDEWALK TO NEAREST CONSTRUCTION JOINT PER CITY STANDARD NO. 217.
2. EXISTING STREET LIGHT POLE MAY BE UTILIZED IF IT MEETS STRUCTURAL REQUIREMENTS TO SUPPORT NEW AND EXISTING EQUIPMENT. IF EXISTING POLE IS REPLACED, A NEW POLE (MAXIMUM 12-IN DIAMETER) SHALL BE INSTALLED IN THE ORIGINAL LOCATION.
3. ENCLOSURE CONTAINING RADIO EQUIPMENT SHALL NOT EXCEED FOUR (4) CUBIC FEET IN SIZE. ONLY ONE VISIBLE ANTENNA PER "SEMI-STEALTH" SITE SHALL BE PERMITTED. ANTENNA IS NOT INCLUDED IN FOUR (4) CUBIC FOOT REQUIREMENT.
4. ALL CONSTRUCTION SHALL COMPLY WITH REQUIREMENTS OF SECTION 230.96 OF THE HUNTINGTON BEACH ZONING CODE.
5. EXISTING STREET LIGHT LUMINAIRE AND MAST ARMS ARE TO BE SALVAGED AND RE-USED IF POLE IS REPLACED. ANY SALVAGED EQUIPMENT NOT USED SHALL BE RETURNED TO THE CITY.
6. INSTALL VAULTS IN LOCATION THAT ALLOWS A 2-FT WIDE CLEAR AREA ADJACENT TO THE VAULT TO ALLOW FOR FUTURE CONDUIT INSTALLATIONS OR STREET WORK.
7. PULL-BOX WITH POWER SWITCH AND BREAKER SHALL LOCATED NO MORE THAN 20-FT FROM THE BASE OF THE SITE UTILITY POLE. BOX LID SHALL BE ENGRAVED WITH TEXT HEIGHT NO SMALLER THAN 3/4-IN CONTAINING THE FOLLOWING TEXT: "CELL SITE POWER SHUT-OFF SWITCH" AND HAVE THE SITE OWNER NAME, SITE ID, SITE ADDRESS AND EMERGENCY CONTACT PHONE NUMBER.
8. PAINT ANTENNA(S) / EQUIPMENT TO MATCH POLE.
9. MAXIMUM OFFSET FOR RISER CONDUITS SHALL BE 4-IN.

GIS NOTES:

DIGITAL SUBMITTAL REQUIREMENTS FOR DATA TO BE USED BY THE CITY'S GEOGRAPHICAL INFORMATION SYSTEM (GIS) IN PREPARING EXHIBITS, MAPS, ETC.:

1. PROVIDE DATA IN A VECTOR FORMAT. EXAMPLES OF SOME ACCEPTABLE FORMATS ARE:
   - AUTOCAD (.DWG OR .DXF)
   - GOOGLE EARTH (.KML OR .KMZ)
   - SHAPEFILE (.SHP)
2. USE UNDERSCORES OR HYPHENS IN THE FILE NAME, NOT SPACES. PROVIDE A SEPARATE DRAWING FILE FOR EACH INDIVIDUAL SHEET CREATED IN AUTOCAD.
3. FOR AUTOCAD FILES OR SHAPEFILES, DEFINE THE COORDINATE SYSTEM AS NAD 1983 STATE PLANE, CALIFORNIA ZONE 6 (US FEET).
4. FOR AUTOCAD FILES, CREATE ALL DATA ELEMENTS IN MODEL SPACE, ADD LAYOUT ELEMENTS IN LAYOUT SPACE, SAVE THE MODEL IN MODEL SPACE, DO NOT ADD VIEWPORTS TO MODEL SPACE AND EXPLODE THE BLOCKS.
5. PROVIDE DATA FOR ALL CONDUITS, BOXES, NODES, ETC. INSTALLED DURING THE PROJECT. SUBMITTAL SHALL BE FROM "AS-BUILT" DATA, NOT ORIGINAL DESIGNS.

APPROVED: CITY ENGINEER REVISION DATE: November 16, 2017	CITY OF HUNTINGTON BEACH DEPARTMENT OF PUBLIC WORKS GENERAL NOTES FOR SMALL CELL INSTALLATIONS	STANDARD PLAN 800 1 OF 1

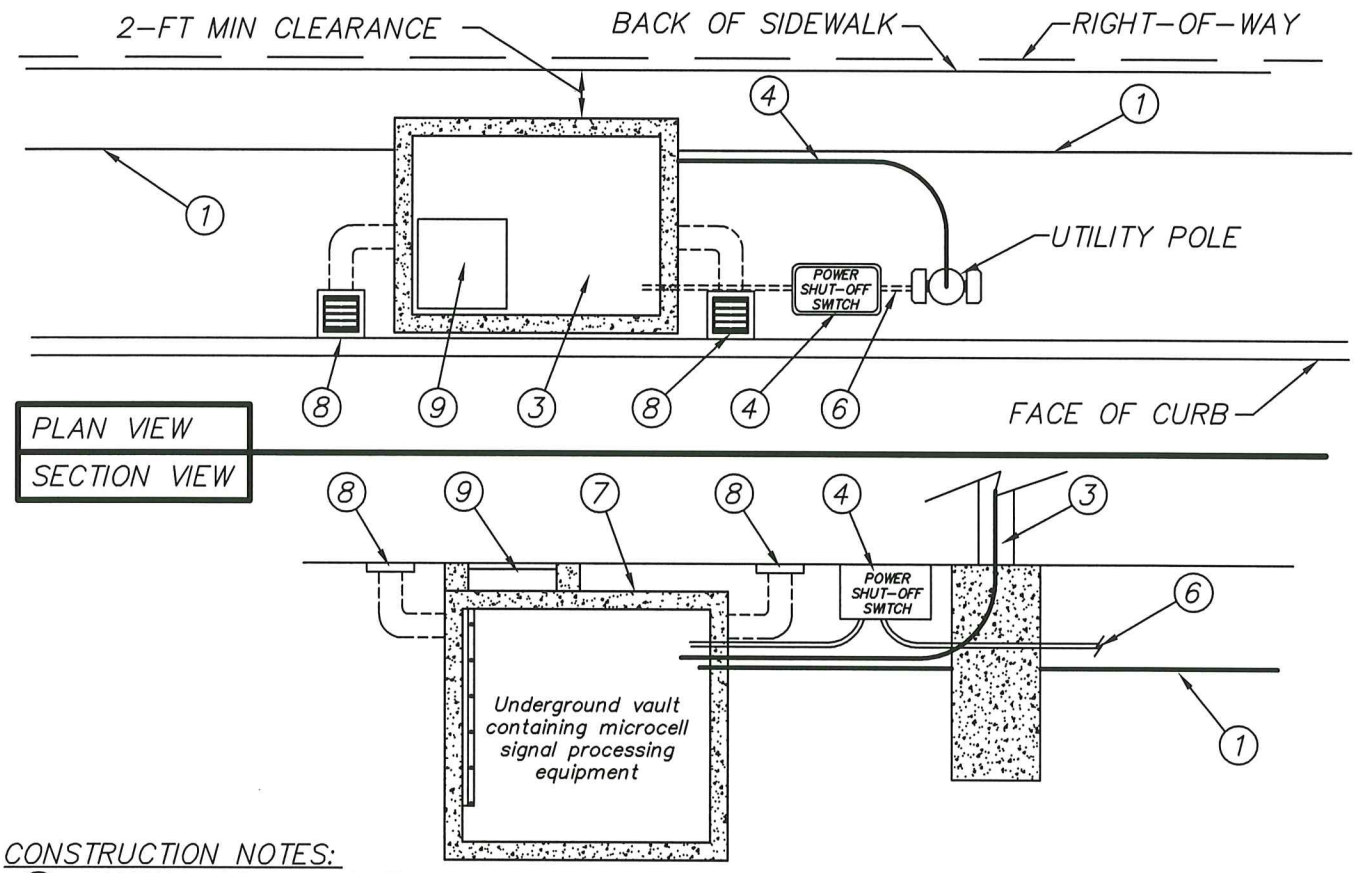

CONSTRUCTION NOTES:

1. INSTALL COMMUNICATIONS CONDUIT PER CITY STANDARD NO. 215. SEPARATE ENCROACHMENT PERMIT REQUIRED.
2. NOT USED
3. INSTALL CONDUIT PER UTILITY COMPANY STANDARDS.
4. INSTALL PULL-BOX WITH SWITCH AND BREAKER LOCATED NO MORE THAN 20-FT FROM BASE OF UTILITY POLE. BOX LID SHALL BE MARKED "CELL SITE POWER SHUT-OFF SWITCH" OR OTHER APPROVED INDUSTRY WORDING. BOX SIZE DETERMINED BY EQUIPMENT REQUIREMENTS.
5. INSTALL PULL-BOX PER SCE REQUIREMENTS.
6. SCE POWER CONDUIT IF POWER SOURCE IS SUPPLIED FROM ADJACENT POLE OR OTHER CIRCUIT.
7. INSTALL OLDCASTLE PRECAST VAULT – MODEL MC510 OR APPROVED EQUAL.
8. INSTALL FLUSH VENT – ALHAMBRA FOUNDRY MODEL A-2121 OR APPROVED EQUAL.
9. INSTALL ACCESS HATCH PER VAULT MANUFACTURER.

GENERAL NOTES:

– SEE STANDARD PLAN NO. 800 PG. 1 FOR GENERAL NOTES.

APPROVED:

CITY ENGINEER

REVISION DATE: November 16, 2017

CITY OF HUNTINGTON BEACH

DEPARTMENT OF PUBLIC WORKS

SMALL CELL INSTALLATION

CASE 1: EQUIPMENT UNDERGROUND

STANDARD PLAN 801

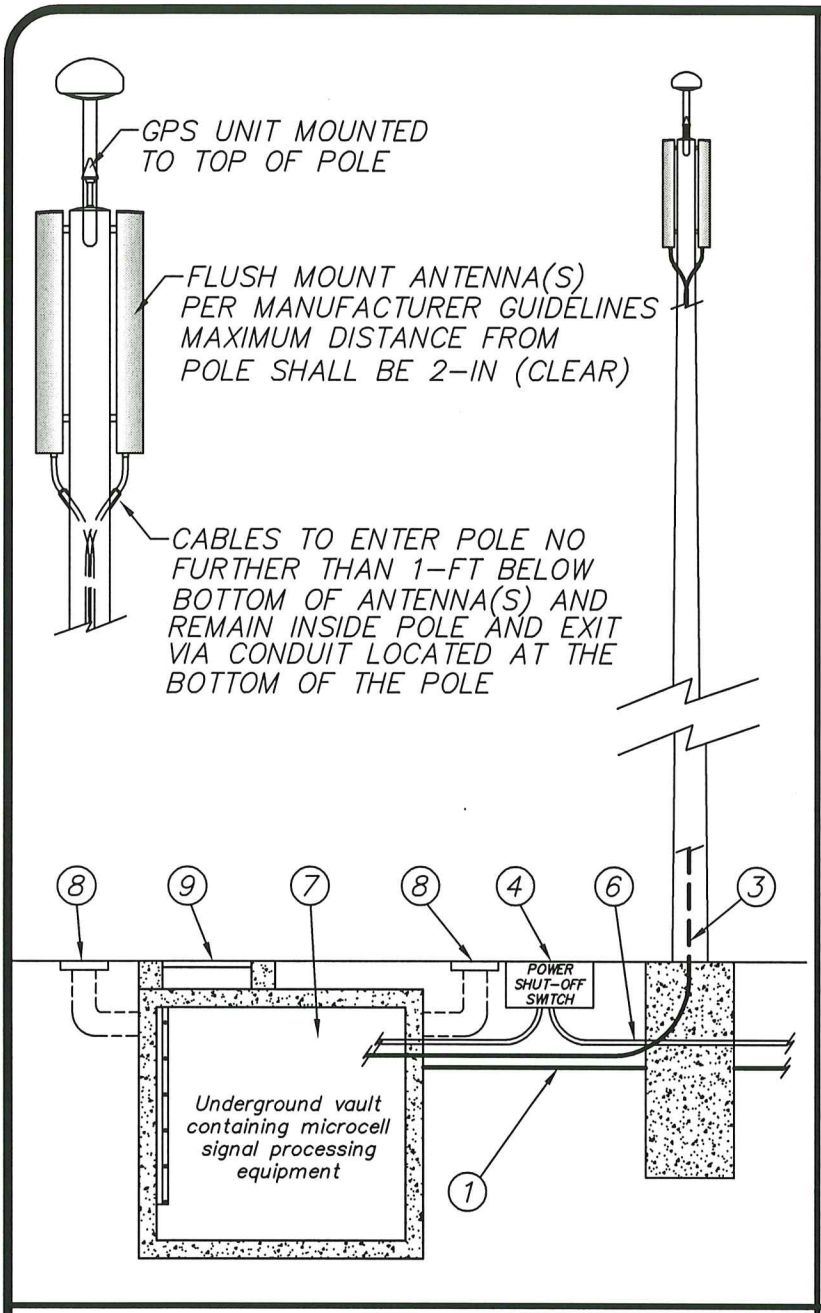

STREET-SIDE VIEW

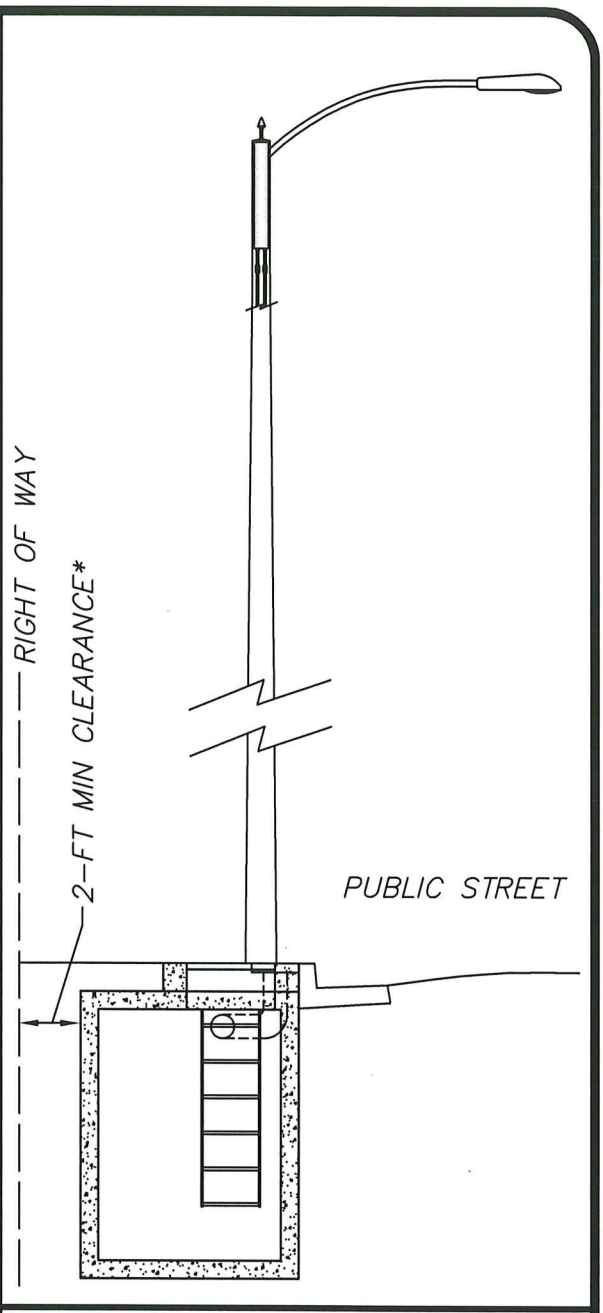

SECTION VIEW

NOTES:

- SEE CITY STANDARD NO. 801 PAGE 1 FOR CONSTRUCTION NOTES.

GENERAL NOTES:

- SEE STANDARD PLAN NO. 800 PAGE 1 FOR GENERAL NOTES.

APPROVED:

CITY ENGINEER

REVISION DATE: November 16, 2017

CITY OF HUNTINGTON BEACH

DEPARTMENT OF PUBLIC WORKS

SMALL CELL INSTALLATION

CASE 1: EQUIPMENT UNDERGROUND

STANDARD PLAN

801

2 of 2

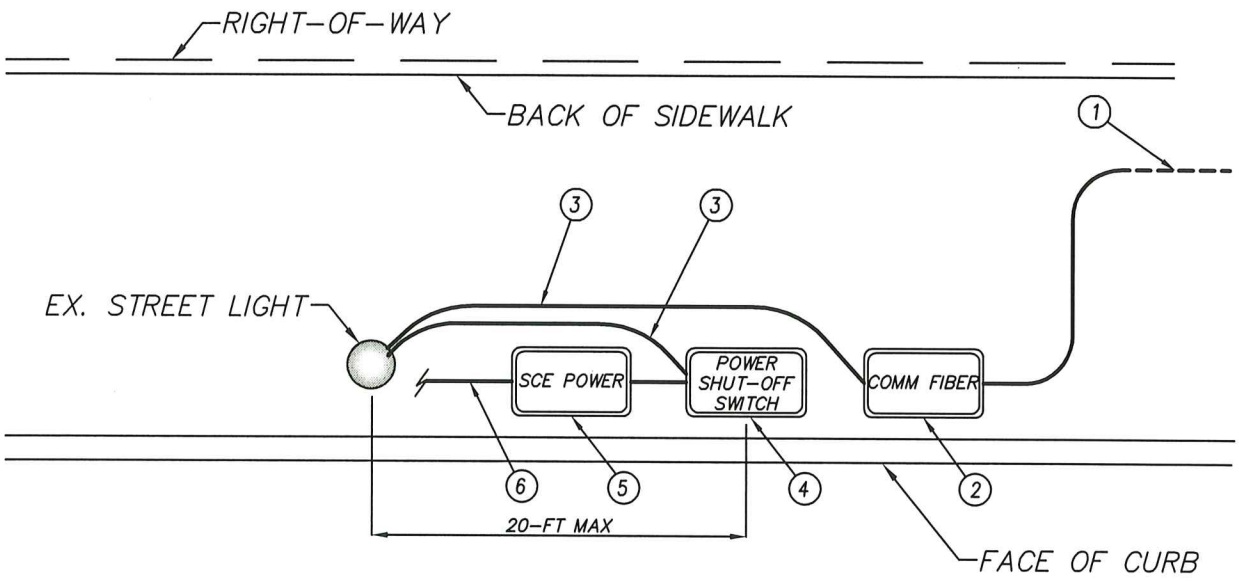

PLAN VIEW

*NOTE: FOR CLARITY, STREET LIGHT LUMINAIR AND MAST ARM NOT SHOWN.

CONSTRUCTION NOTES:

1. INSTALL COMMUNICATIONS CONDUIT PER CITY STANDARD NO. 215. SEPARATE ENCROACHMENT PERMIT REQUIRED.
2. INSTALL COMMUNICATIONS PULL-BOX SIZED PER UTILITY COMPANY STANDARDS.
3. INSTALL CONDUIT PER UTILITY COMPANY STANDARDS.
4. INSTALL PULL-BOX WITH SWITCH AND BREAKER LOCATED NO MORE THAN 20-FT FROM BASE OF UTILITY POLE. BOX LID SHALL BE MARKED "CELL SITE POWER SHUT-OFF SWITCH" OR OTHER APPROVED INDUSTRY WORDING. BOX SIZE DETERMINED BY EQUIPMENT REQUIREMENTS.
5. INSTALL PULL-BOX PER SCE REQUIREMENTS.
6. SCE POWER CONDUIT IF POWER SOURCE IS SUPPLIED FROM ADJACENT POLE OR OTHER CIRCUIT.

GENERAL NOTES:

- SEE STANDARD PLAN NO. 800 PG. 1 FOR GENERAL NOTES.

APPROVED: CITY ENGINEER	CITY OF HUNTINGTON BEACH DEPARTMENT OF PUBLIC WORKS	
REVISION DATE: November 16, 2017	SMALL CELL INSTALLATION CASE 2: "STEALTH" POLE	STANDARD PLAN 802 1 of 2

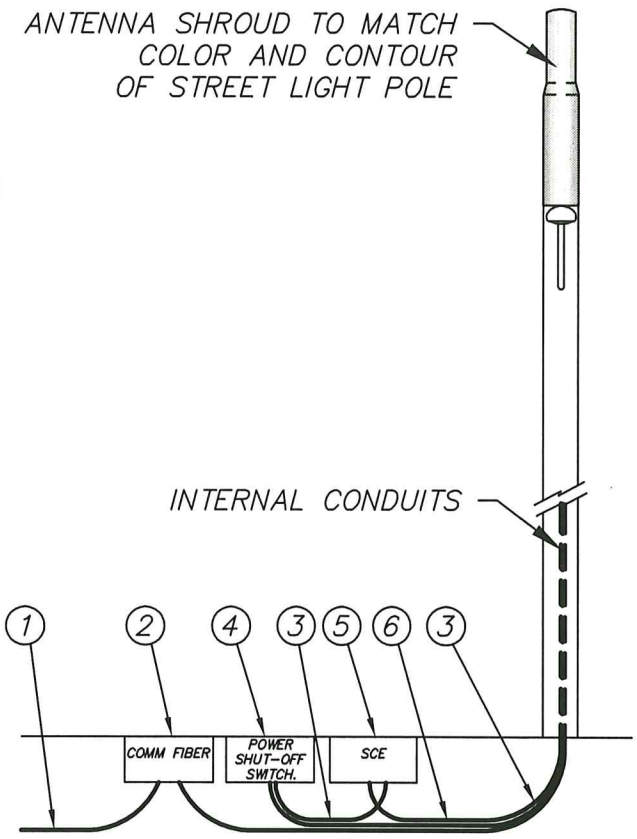

STREET-SIDE VIEW

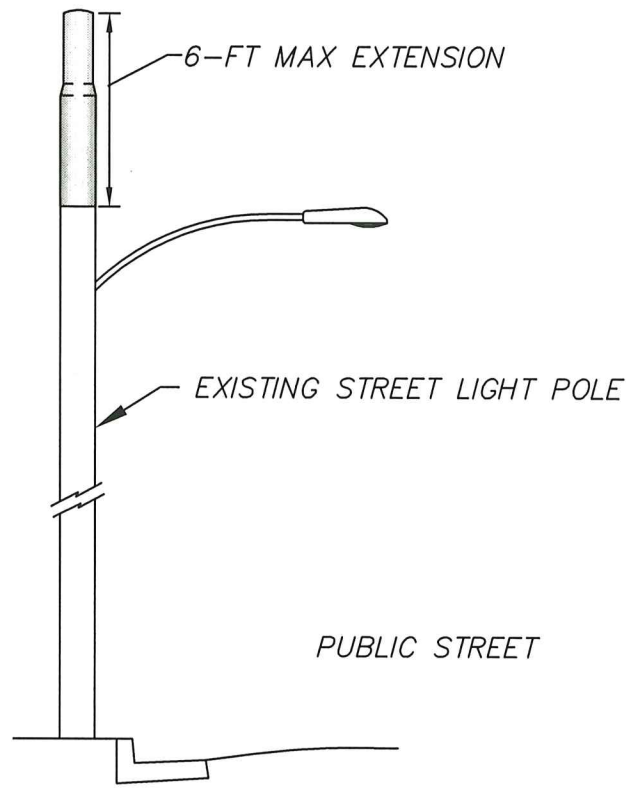

SECTION VIEW

CONSTRUCTION NOTES:

1. INSTALL COMMUNICATIONS CONDUIT PER CITY STANDARD NO. 215. SEPARATE ENCROACHMENT PERMIT REQUIRED.
2. INSTALL COMMUNICATIONS PULL-BOX SIZED PER UTILITY COMPANY STANDARDS.
3. INSTALL CONDUIT PER UTILITY COMPANY STANDARDS.
4. INSTALL PULL-BOX WITH SWITCH AND BREAKER LOCATED NO MORE THAN 20-FT FROM BASE OF UTILITY POLE. BOX LID SHALL BE MARKED "CELL SITE POWER SHUT-OFF SWITCH" OR OTHER APPROVED INDUSTRY WORDING. BOX SIZE DETERMINED BY EQUIPMENT REQUIREMENTS.
5. INSTALL PULL-BOX PER SCE REQUIREMENTS.
6. SCE POWER CONDUIT IF POWER SOURCE IS SUPPLIED FROM ADJACENT POLE OR OTHER CIRCUIT.

GENERAL NOTES:

- SEE STANDARD PLAN NO. 800 PG. 1 FOR GENERAL NOTES.

APPROVED:

CITY ENGINEER

REVISION DATE: November 16, 2017

CITY OF HUNTINGTON BEACH

DEPARTMENT OF PUBLIC WORKS

SMALL CELL INSTALLATION

CASE 2: "STEALTH" POLE

STANDARD PLAN 802

2 of 2

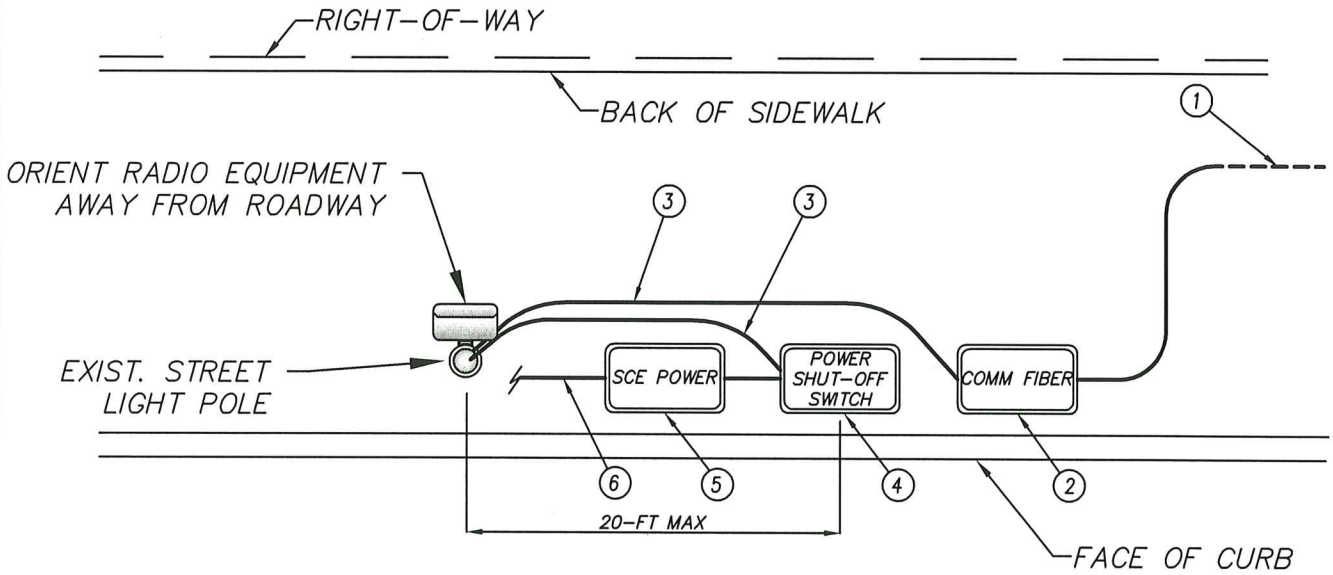

PLAN VIEW

*NOTE: FOR CLARITY, STREET LIGHT LUMINAIR AND MAST ARM NOT SHOWN.

GENERAL NOTES:

1. INSTALL COMMUNICATIONS CONDUIT PER CITY STANDARD NO. 215. SEPARATE ENCROACHMENT PERMIT REQUIRED.
2. INSTALL COMMUNICATIONS PULL-BOX SIZED PER UTILITY COMPANY STANDARDS.
3. INSTALL CONDUIT PER UTILITY COMPANY STANDARDS.
4. INSTALL PULL-BOX WITH SWITCH AND BREAKER LOCATED NO MORE THAN 20-FT FROM BASE OF UTILITY POLE. BOX LID SHALL BE MARKED "CELL SITE POWER SHUT-OFF SWITCH" OR OTHER APPROVED INDUSTRY WORDING. BOX SIZE DETERMINED BY EQUIPMENT REQUIREMENTS.
5. INSTALL PULL-BOX PER SCE REQUIREMENTS.
6. SCE POWER CONDUIT IF POWER SOURCE IS SUPPLIED FROM ADJACENT POLE OR OTHER CIRCUIT.

GENERAL NOTES:

- SEE STANDARD PLAN NO. 800 PG. 1 FOR GENERAL NOTES.

APPROVED: CITY ENGINEER REVISION DATE: November 16, 2017	CITY OF HUNTINGTON BEACH DEPARTMENT OF PUBLIC WORKS SMALL CELL INSTALLATION CASE 3: "SEMI-STEALTH" POLE	STANDARD PLAN 803 1 of 2

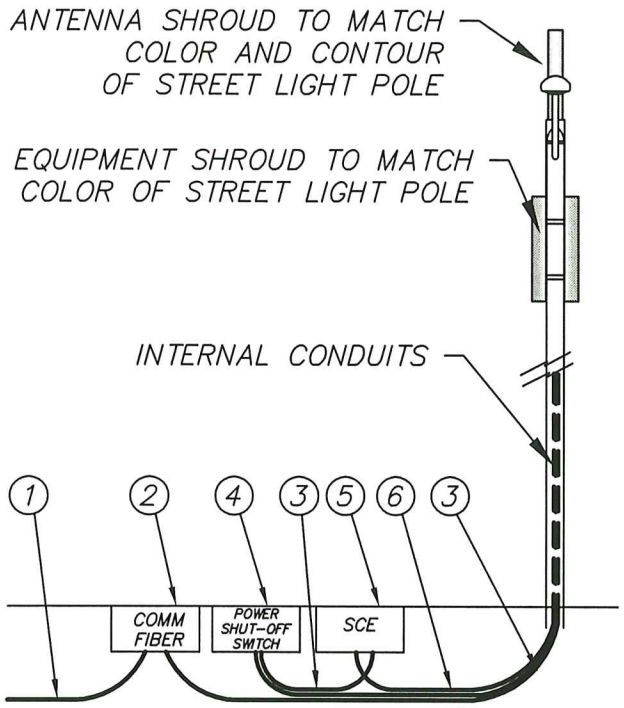

STREET-SIDE VIEW

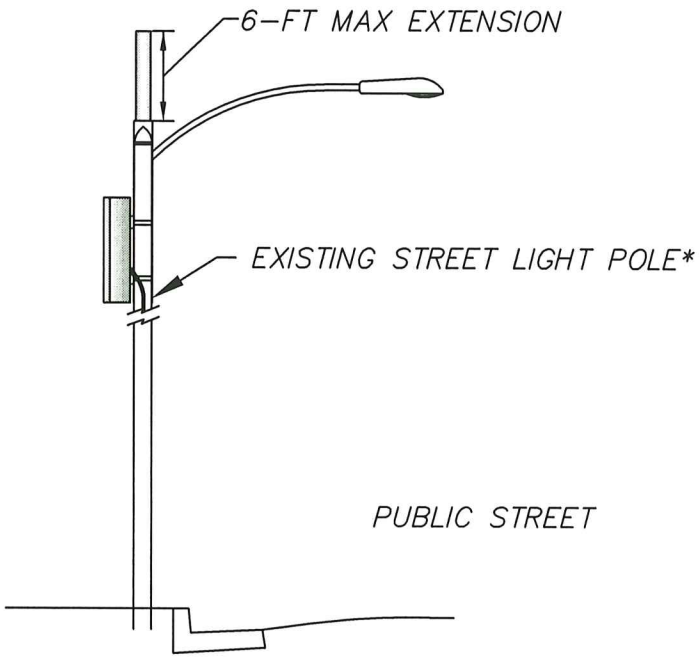

SECTION VIEW

CONSTRUCTION NOTES:

1. INSTALL COMMUNICATIONS CONDUIT PER CITY STANDARD NO. 215. SEPARATE ENCROACHMENT PERMIT REQUIRED.
2. INSTALL COMMUNICATIONS PULL-BOX SIZED PER UTILITY COMPANY STANDARDS.
3. INSTALL CONDUIT PER UTILITY COMPANY STANDARDS.
4. INSTALL PULL-BOX WITH SWITCH AND BREAKER LOCATED NO MORE THAN 20-FT FROM BASE OF UTILITY POLE. BOX LID SHALL BE MARKED "CELL SITE POWER SHUT-OFF SWITCH" OR OTHER APPROVED INDUSTRY WORDING. BOX SIZE DETERMINED BY EQUIPMENT REQUIREMENTS.
5. INSTALL PULL-BOX PER SCE REQUIREMENTS.
6. SCE POWER CONDUIT IF POWER SOURCE IS SUPPLIED FROM ADJACENT POLE OR OTHER CIRCUIT.

GENERAL NOTES:

- SEE STANDARD PLAN NO. 800 PG. 1 FOR GENERAL NOTES.

APPROVED:

CITY ENGINEER

REVISION DATE: November 16, 2017

CITY OF HUNTINGTON BEACH

DEPARTMENT OF PUBLIC WORKS

SMALL CELL INSTALLATION

CASE 3: "SEMI-STEALTH" POLE

STANDARD PLAN 803

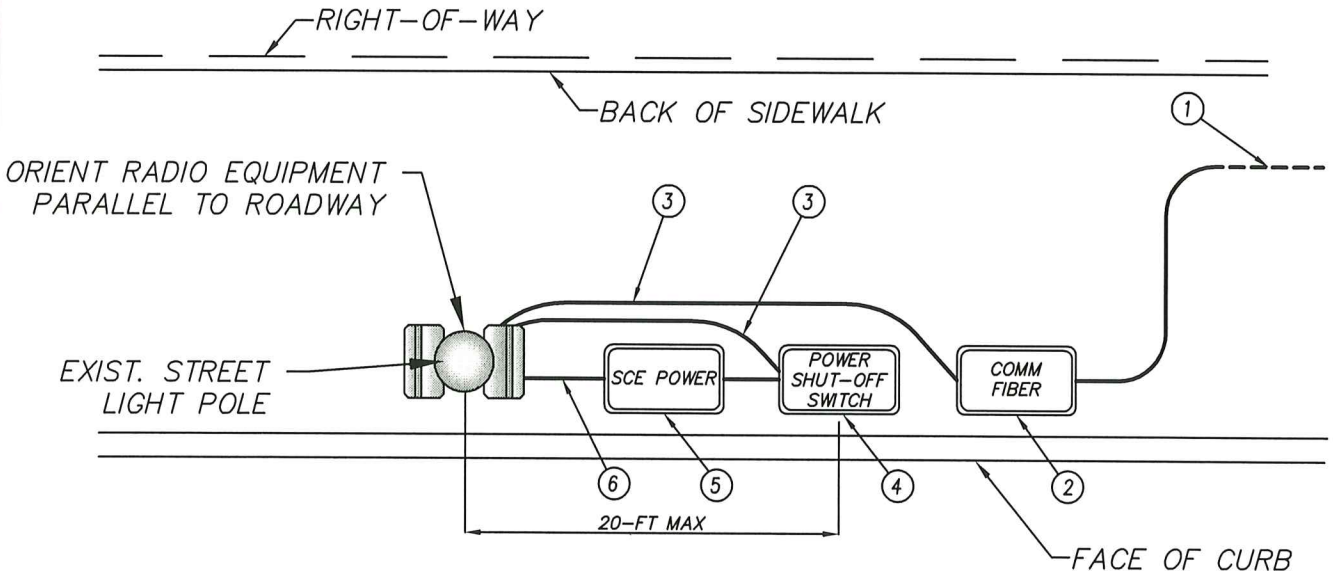

PLAN VIEW

*NOTE: FOR CLARITY, STREET LIGHT LUMINAIR AND MAST ARM NOT SHOWN.

CONSTRUCTION NOTES:

1. INSTALL COMMUNICATIONS CONDUIT PER CITY STANDARD NO. 215. SEPARATE ENCROACHMENT PERMIT REQUIRED.
2. INSTALL COMMUNICATIONS PULL-BOX SIZED PER UTILITY COMPANY STANDARDS.
3. INSTALL CONDUIT PER UTILITY COMPANY STANDARDS.
4. INSTALL PULL-BOX WITH SWITCH AND BREAKER LOCATED NO MORE THAN 20-FT FROM BASE OF UTILITY POLE. BOX LID SHALL BE MARKED "CELL SITE POWER SHUT-OFF SWITCH" OR OTHER APPROVED INDUSTRY WORDING. BOX SIZE DETERMINED BY EQUIPMENT REQUIREMENTS.
5. INSTALL PULL-BOX PER SCE REQUIREMENTS.
6. SCE POWER CONDUIT IF POWER SOURCE IS SUPPLIED FROM ADJACENT POLE OR OTHER CIRCUIT.

GENERAL NOTES:

SEE STANDARD PLAN NO. 800 PG. 1 FOR GENERAL NOTES.

APPROVED: CITY ENGINEER	CITY OF HUNTINGTON BEACH DEPARTMENT OF PUBLIC WORKS	
REVISION DATE: November 16, 2017	SMALL CELL INSTALLATION CASE 4: "SLEEK" POLE	STANDARD PLAN 804 1 of 2

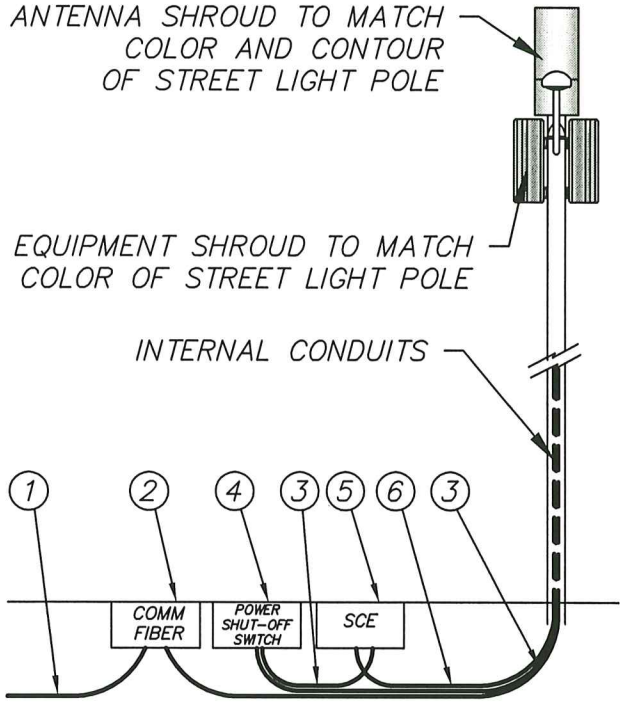

STREET-SIDE VIEW

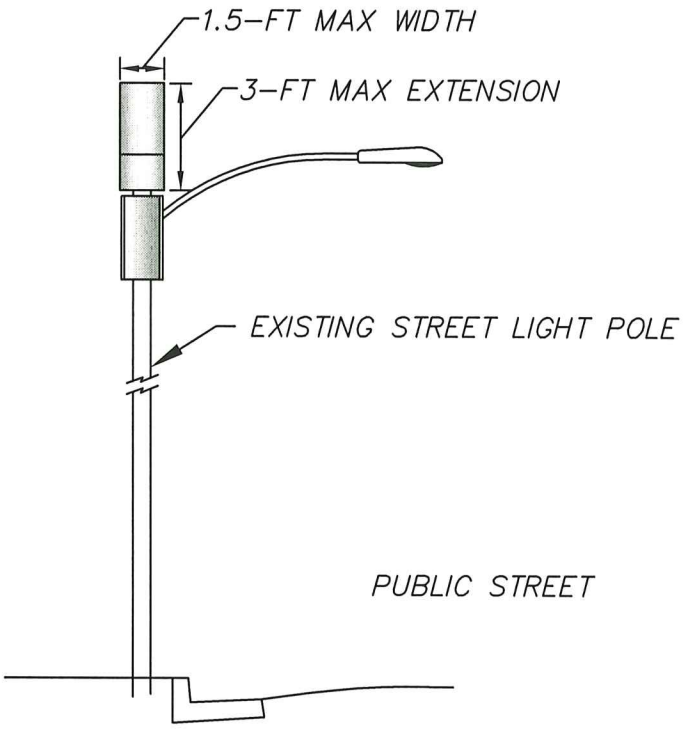

SECTION VIEW

CONSTRUCTION NOTES:

1. INSTALL COMMUNICATIONS CONDUIT PER CITY STANDARD NO. 215. SEPARATE ENCROACHMENT PERMIT REQUIRED.
2. INSTALL COMMUNICATIONS PULL-BOX SIZED PER UTILITY COMPANY STANDARDS.
3. INSTALL CONDUIT PER UTILITY COMPANY STANDARDS.
4. INSTALL PULL-BOX WITH SWITCH AND BREAKER LOCATED NO MORE THAN 20-FT FROM BASE OF UTILITY POLE. BOX LID SHALL BE MARKED "CELL SITE POWER SHUT-OFF SWITCH" OR OTHER APPROVED INDUSTRY WORDING. BOX SIZE DETERMINED BY EQUIPMENT REQUIREMENTS.
5. INSTALL PULL-BOX PER SCE REQUIREMENTS.
6. SCE POWER CONDUIT IF POWER SOURCE IS SUPPLIED FROM ADJACENT POLE OR OTHER CIRCUIT.

GENERAL NOTES:

- SEE STANDARD PLAN NO. 800 PG. 1 FOR GENERAL NOTES.

APPROVED:

CITY ENGINEER

REVISION DATE: November 16, 2017

CITY OF HUNTINGTON BEACH

DEPARTMENT OF PUBLIC WORKS

SMALL CELL INSTALLATION

CASE 4: "SLEEK" POLE

STANDARD PLAN 804