BOARD OF COMMISSIONERS MEETING

Ty Wessell, Chairman

NOTICE OF MEETING

The Executive Board Session of the Leelanau County Board of Commissioners will be held on Tuesday, November 14, 2023, at 9:00 a.m., in the Commissioner Meeting Room, Leelanau County Government Center, Suttons Bay, Michigan

(Please silence any unnecessary cellular/electronic devices)

A live streaming of this meeting will be available for viewing via the following link –
https://www.youtube.com/channel/UCNQTgIgcTedF2qB8floC1GQ?view_as=subscriber

There are two ways to provide public comment during the meeting – you can attend in-person, or email your comments prior to the meeting to clerk@leelanau.gov

(Proceedings of the meeting are being recorded and are not the official record of the meeting; the formally approved/accepted written copy of the minutes will be the official record of the meeting.)

TENTATIVE AGENDA

CALL TO ORDER
PLEDGE OF ALLEGIANCE
MOMENT OF SILENCE/PRIVATE PRAYER
ROLL CALL
APPROVAL OF AGENDA / LATE ADDITIONS OR DELETIONS

COMMUNICATIONS, PROCLAMATIONS, PRESENTATIONS:	**PAGE #**
• Administrator Update	
• The 13th Judicial Circuit Court Update, *Trina Girardin, Circuit Court Administrator*	2-14
• Point Broadband – Fiber Update, *Todd Holt, CEO*	

PUBLIC COMMENT *(3 Minutes, agenda-specific)*
COMMISSIONER COMMENTS
ACTION ITEMS

1. Administration –	
a. FY2024 Budget:	
i. Appropriations Act Resolution and Budget Rules.	15-21
ii. Public Hearing on Budget – 7:15 p.m., November 21, 2023.	
b. Set Date for the Committee of the Whole Session – Recommendations on Boards and Commissions.	
c. Netlink FY 2024 Copier Service Agreement Update.	
d. Grand Traverse Band of Ottawa and Chippewa Indians 2% Allocation Requests, Second Cycle –	
i. Board of Commissioners/Children's Discovery Center – $25,000.00.	22-29
ii. Board of Commissioners/Habitat For Humanity, NWCC Development – $50,000.00.	30-36
iii. Board of Commissioners/Homestretch, Provemont Pines HOA – $30,000.00.	37-95
iv. Board of Commissioners/Peninsula Housing, Housing Study – $12,900.00.	96-102
v. Probate and Family Court/Child & Family Services-Safe Haven, $5,000.00.	103-110
vi. Senior Services/Leelanau Christian Neighbors, Food Pantry Assistance – $34,000.00.	111-120
vii. Solid Waste Council –	
1. Mattress Recycling Request (BARC), $5,000.00.	121-127
2. Tire Recycling Request, $10,000.00.	128-135
2. Finance Committee Recommendations.	
3. Sheriff's Office –	
a. Annual Vehicle Purchase.	136-152
b. Dishwasher Purchase.	153-160
4. Michigan Municipal Risk Management Authority (MMRMA) RAP/CAP Grant Acceptance (Reimbursement) – Sheriff's Office, Staff and Command Project, $3,055.30.	161-163
5. Personnel Committee/Human Resources –	
a. Staffing Levels Adjustments Request:	
i. Planning Director.	164
ii. Executive Assistant.	165
iii. Sheriff's Office Administrative Secretary.	166-167
b. Rehmann Robson, LLC, Renewal Agreement for ACA Forms Preparation.	168-175
c. Board Policy #1.07 – Legal Update.	176-197
d. Voluntary Donated Sick Leave Policy.	198-202
6. Emergency Management – Emergency Management Performance Grant (EMPG) Renewal Application.	203-223
7. Equalization – L-4402 Apportionment Report Update.	224-230
8. Letter of Support – Grand Traverse Band of Ottawa and Chippewa Indians, *Chairman Wessell, under separate cover.*	
9. Brownfield Redevelopment Authority – Bluebird Project Plan Update.	231-233
10. Solid Waste Council –	
a. Tire Recycling Amendment, ERG.	234-236
b. Mattress Recycling, Bay Area Recycling for Community (BARC).	237-248
11. Parks and Recreation Commission –	
a. Request to Roll FY2023 Funding Forward to FY2024.	249
b. Parks Administrative Assistant Stipend.	250-257

REVIEW OF FINANCIALS
SPECIAL REPORTS BY STAFF, COMMISSIONERS, AND AFFILIATED AGENCIES
PUBLIC COMMENT *(5 Minutes)*
COMMISSIONER COMMENTS
APPROVAL OF FINANCIALS

- Amendments & Transfers
- Miscellaneous Fund Transfers and Amendments
- Claims and Accounts
- Post Audit

ADJOURNMENT

13TH CIRCUIT COURT

ANTRIM COUNTY
GRAND TRAVERSE COUNTY
LEELANAU COUNTY

2022 ANNUAL REPORT

www.13thcircuitcourt.com / (231)922-4701 / c13court@13thcircuitcourt.org

TABLE OF CONTENTS

CIVIL CASELOAD

Circuit Court cases are separated into the following categories: Appellate, Civil, Domestic Relations, Adult Personal Protection, Proceedings Under the Juvenile Code, Proceedings Under the Adoption Code, Miscellaneous Family/Ancillary. The Appellate category includes Criminal Appeals, Civil Appeals, Agency Appeals (Administrative Agency, Employment Security Commission, Secretary of State, and Parole Board decisions), and Other Appeals (habeas corpus, superintending control and writs). The Civil category includes General Civil (business claims, condemnation, employment discrimination, environments, forfeiture claims, housing & real estate, contracts, labor relations, antitrust/franchising/trade regulations, corporate receivership and general civil), Auto Negligence (property damage, no-fault insurance and personal injury), Other Civil Damage (medical malpractice, other professional malpractice, other personal injury, products liability, dramship act and other damage suits), and Other Civil (proceedings to restore/establish/correct records, claim & delivery, receivers in supplemental proceedings, supplemental proceedings and miscellaneous proceedings). The Domestic Relations category includes Divorce with Minor Children, Divorce Without Children, Paternity, UIFSA (assist with discovery and establishment), Support, and Other Domestic (custody and other domestic relations matters. The Adult Personal Protection category includes Domestic Relations and Non-Domestic Relations. The Juvenile Code category include Designated Juvenile Offenses, Delinquency Proceedings, Traffic and Local Ordinance, Child Protective Proceedings and Juvenile Personal Protection Actions. The Adoption Code category includes Petitions for Adoptions (adult, agency international, direct placement, relative, safe delivery of newborn, non-relative guardian, step-parent and other). The Miscellaneous Family/Ancillary category includes emancipation of a minor, infectious disease, safe delivery of newborn child, name change, young adult voluntary foster care, violation proceedings on out-of-county personal protection orders, adult conservatorship, minor conservatorship, developmental disability guardianship, adult guardianship, limited guardianship of adult, minor guardianship, limited guardianship of minor, protective orders, judicial admission and mental commitment.

CASE MANAGEMENT

The Thirteenth Judicial Circuit Court serves Antrim, Grand Traverse, and Leelanau Counties. The Circuit Court handles all civil cases with claims in excess of $25,000, all felony criminal cases, requests for injunctive relief and domestic relations matters. Additionally, the Judges hear cases appealed from other trial courts or from administrative agencies. The Circuit Court judges preside over matters in Antrim, Grand Traverse, and Leelanau Counties. In 2022, Judge Elsenheimer served as the Thirteenth Circuit Court's Chief Judge. The Family Divisions of the Thirteenth Circuit Court handle all juvenile criminal cases, child abuse and neglect cases, guardianships of juveniles and adoption proceedings. The Probate Judge for each County is also the presiding Judge of the Family Division in the county where he or she was elected. In 2022, Judge Elsenheimer served as the Chief Probate Judge for Antrim, Grand Traverse, and Leelanau counties. The Circuit Court follows the mandated timelines schedule as delineated in the Michigan Court Rules and Administrative Orders to efficiently manage and dispose of its cases. Once a new case has been opened, the Court issues a Scheduling Order providing time guidelines for the processing of the case and establishing dates when future actions should begin or be completed with regard to the case. The primary goal of the Court Administrator's staff is to ensure that cases are kept current and the docket remains up to-date

In 2022, the number of **newly filed** civil cases in the Thirteenth Circuit Court was 1,832. This is an increase from the number of new civil cases filed in the previous year.

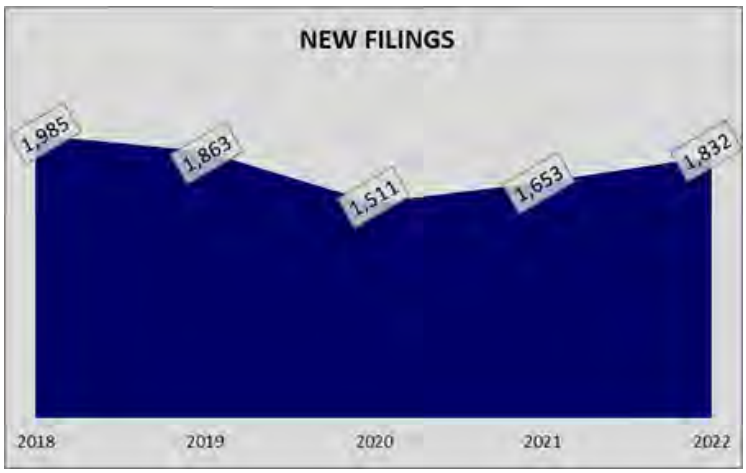

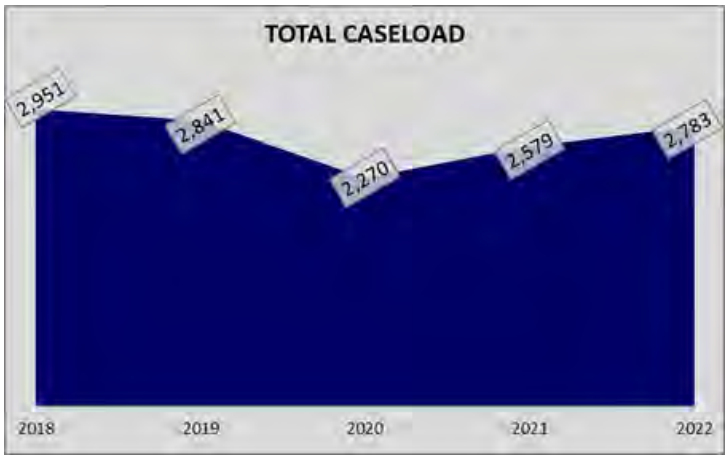

The Thirteenth Circuit Court's **total caseload** consists of cases that were still pending when the year began, cases that were re-opened and all newly filed cases. In 2022, the Thirteenth Circuit Court's total civil caseload increased.

In 2022, the Court **disposed** of 2,237 civil cases. The primary method of disposition, at 30%, was settlement by the parties. Other disposition methods included, but were not limited to: jury or bench trials, dismissal by the parties or the Court, entry of orders by the Court, denial either ex parte or after a hearing, withdrawal by a petitioner, transfer, deferral or case type change.

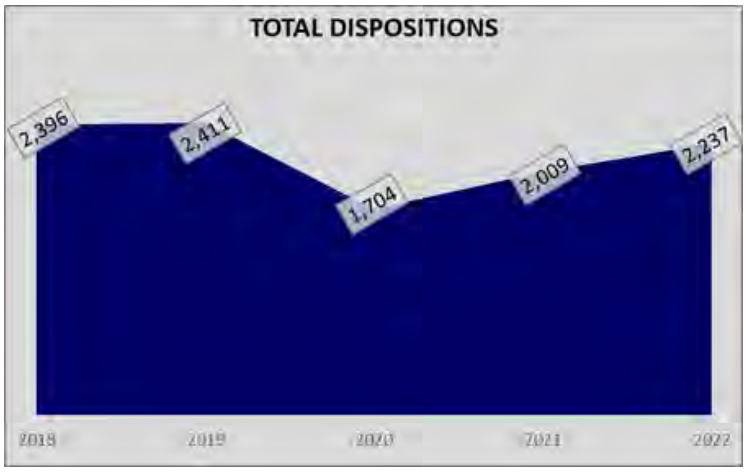

In 2022, the number of **newly filed** capital felony cases (in which the maximum sentence is lifetime imprisonment), the number of non-capital felony cases and the number criminal appeals all increased.

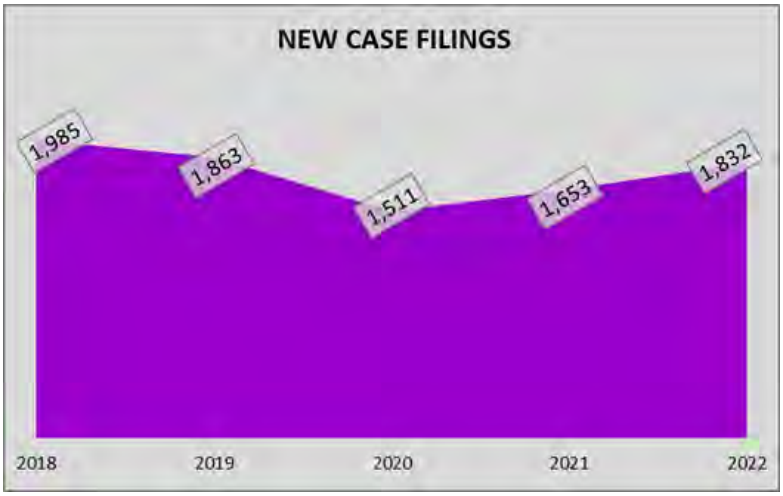

The Circuit Court's **total caseload** consists of cases that were still pending when the year began, cases that were re-opened, and all newly filed cases. In 2022, the Thirteenth Circuit Court's total criminal caseload for capital felonies, non capital felonies and criminal appeals all increased.

In 2022, the Court **disposed** of 485 criminal cases. Guilty pleas resulted in the greatest number of dispositions, with the Court receiving 57 guilty pleas in Antrim County, 259 in Grand Traverse County and 25 in Leelanau County.

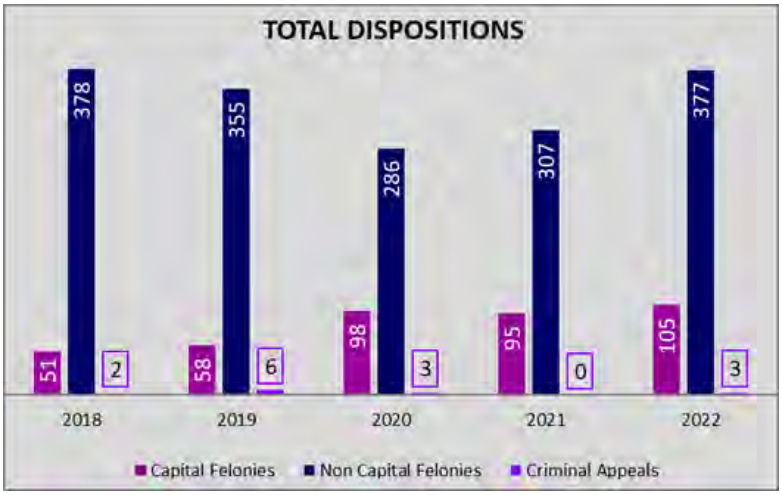

In 2022, the Thirteenth Circuit Court conducted a total of **36 jury trials.**

In order to limit public health risk and establish parameters for conducting in-person jury trials during a pandemic, the Court continued Local Administrative Order 2020-09. These parameters incorporated safety protocols such as health screening all participants, remote participation of attorneys and witnesses when possible, social distancing, contract tracing, and enhanced sanitization and disinfection of facilities. Furthermore, jury selection continued to be conducted at off-site locations under specific circumstances that could accommodate the necessary social distancing guidelines.

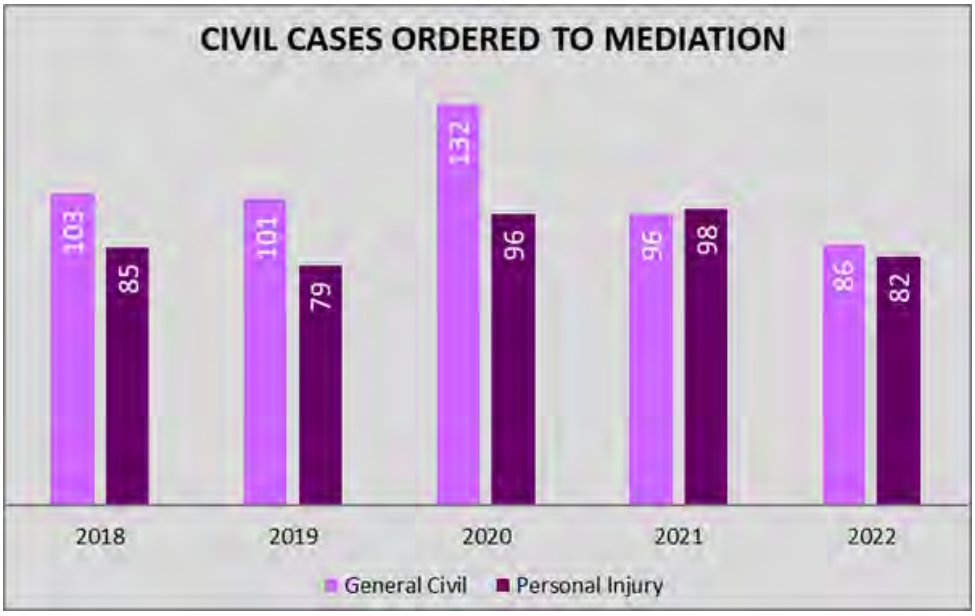

Facilitative mediation is an alternative dispute resolution process in which a neutral third-party facilitates confidential communications between the parties in an attempt to help them reach a mutually agreeable resolution. In mediation, solutions are generated by the parties; whereas, in litigation, the resolution of a conflict is imposed upon the parties by the Court. In 2022, 168 total cases were ordered into mediation, with 151 actually mediated.

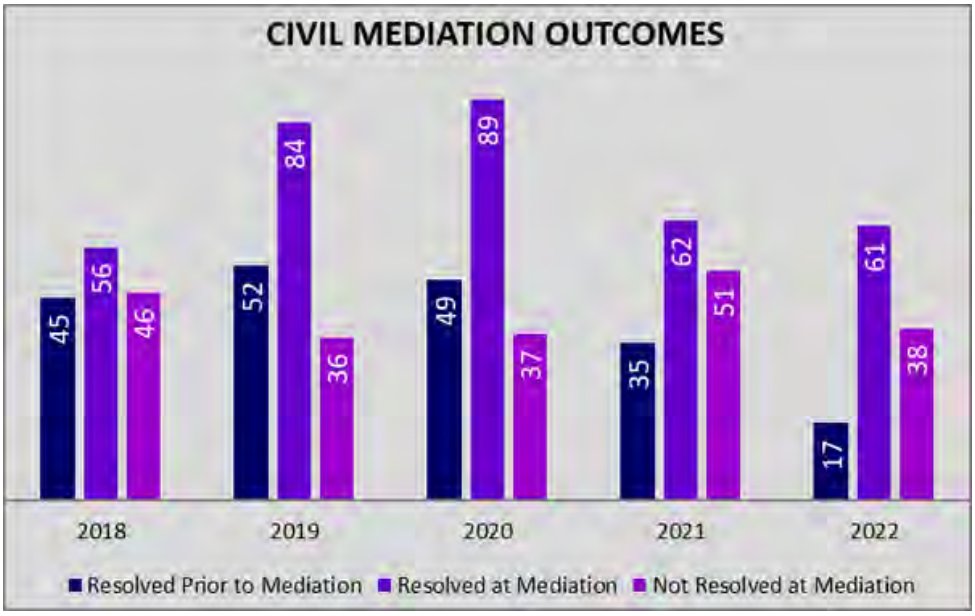

40%

SETTLED AT MEDIATION

In 2022, 379 cases were ordered to facilitative mediation via a Domestic Relations Scheduling Conference Order (DRSCO) or a Domestic Relations Pre-Trial Order (DRPTO). DRSCOs are generated by the Court when a divorce matter is filed, whereas DRPTOs can be generated either before or after a Judgment of Divorce has been entered when there are child related issues such as, paternity, support, custody and UIFSA registration.

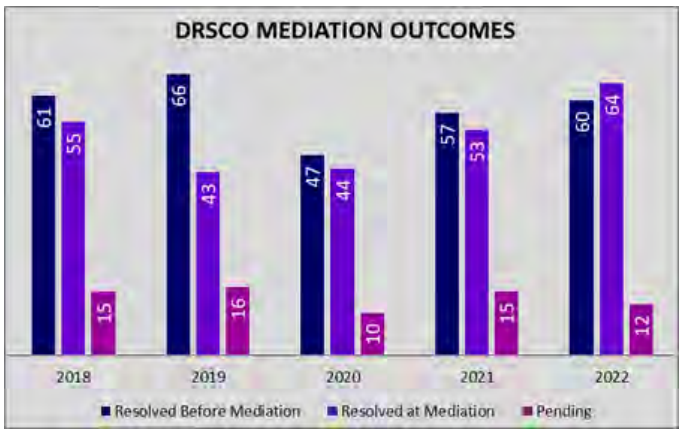

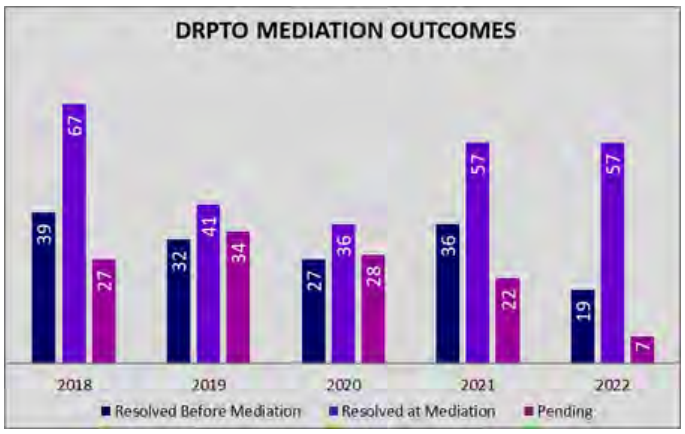

2022 Mediator of the year: Sara C. Vyncke

The 13th Circuit Court approves ADR mediators based on their character, experience and training. Since 2018, the Court has issued a “Mediator of the Year" award to a renowned mediator who demonstrates honesty, integrity and impartiality in providing court-connected dispute resolution services. The recipient of the 2022 Mediator of the Year award is Sara C. Vyncke. Sara is the founder of the firm Legacy Legal Group, PLC and has been practicing law since 2007. She has mediated over 150 cases.

40%

SETTLED AT MEDIATION

The Friend of the Court (FOC) assists the Circuit Court by providing enforcement of Court Orders relating to child support, health care, spousal support, parenting time/custody and investigating, evaluating and submitting recommendations to the Court on contested domestic relations matters.

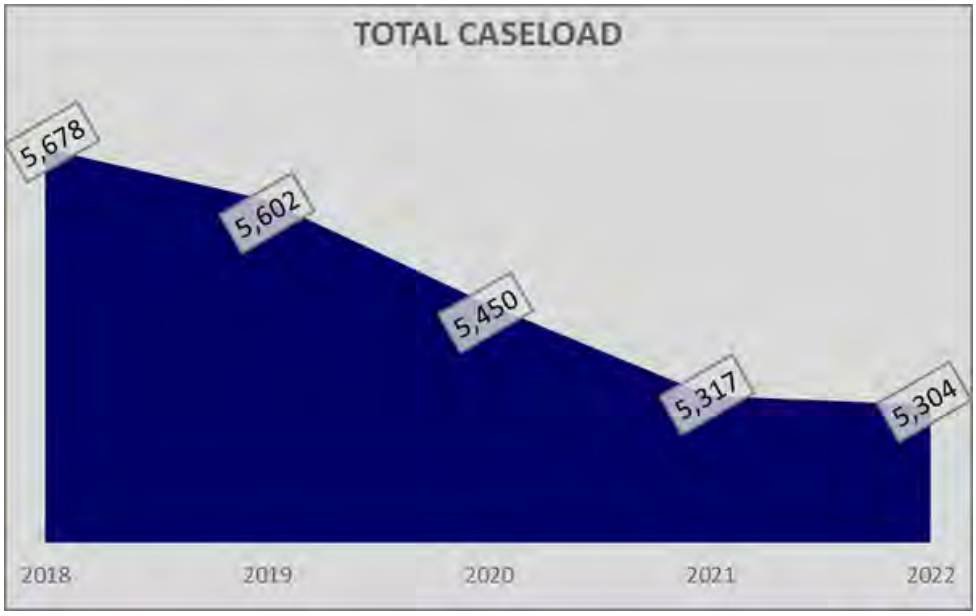

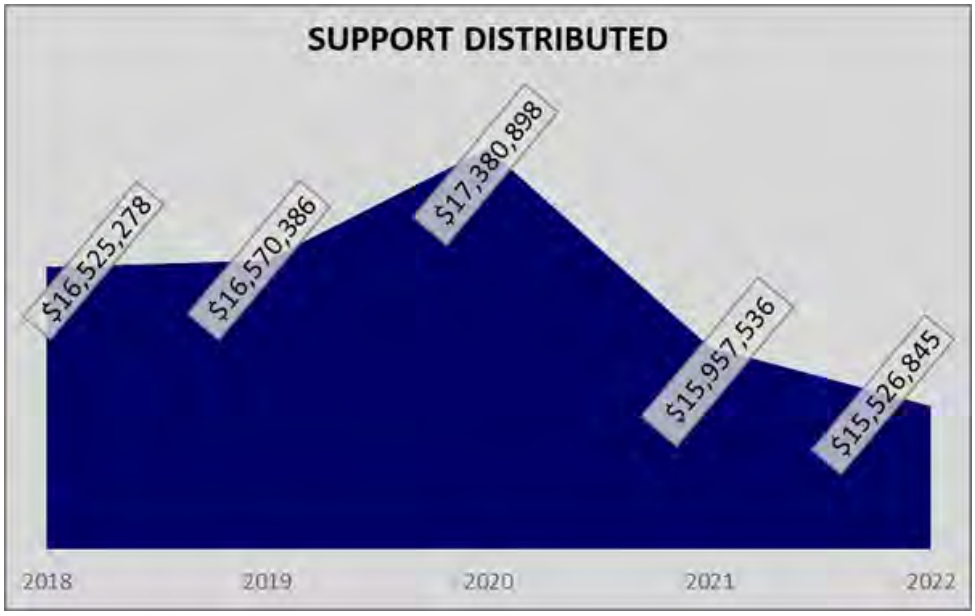

In 2022, the FOC conducted a total of 693 investigations and reviews, including: 17 parenting-time investigations, 381 child support reviews, 294 other support investigations and 1 miscellaneous/other review. The FOC also registered 81 orders pursuant to the Uniform Interstate Family Support Act, sent 520 National Medical Support notices, issued 384 bench warrants, and generated 153 custody and parenting time notices.

The FOC's total revenue is composed of support judgment fees, custody and parenting time judgment fees, license reinstatement fees, service fees, incentive payments, returns for IV-D services, and program and non-program income. The total amount of support distributed includes child support, spousal support, extraordinary medical expenses and birthing costs.

ANTRIM: In 2022, 116 new domestic relations cases were filed with the Antrim County Family Division. The total domestic relations caseload consisted of 170 cases, with the Court disposing of 113 cases. The total juvenile caseload consisted of 53 cases. There were 46 new juvenile filings: 41 delinquency cases and five child protective cases. Further, in 2022, there were six children associated with new child protective filings and the Court served as temporary legal guardian for two children. The Court also finalized 15 adoptions, processed 65 adult personal protection actions and disposed of 23 miscellaneous family actions.

Antrim County Courthouse

Grand Traverse County Courthouse

GRAND TRAVERSE: In 2022, 470 new Domestic Relations cases were filed with the Grand Traverse County Family Division. The total domestic relations caseload consisted of 879 cases, with the Court disposing of 712 cases. The total juvenile caseload consisted of 310 cases. There were 262 new juvenile filings: 237 delinquency cases, two traffic cases, 18 child protective cases and five personal protection actions. The Court supervised 73 juveniles in 2022. Further, there were 32 children associated with new child protective filings and the Court served as temporary legal guardian for 48 children. The Court also finalized 24 adoptions, processed 303 adult personal protection actions and disposed of 66 miscellaneous family actions.

LEELANAU: In 2022, 92 new Domestic Relations cases were filed with the Leelanau County Family Division. The total domestic relations caseload consisted of 132 cases, with the Court disposing of 96 cases. The total juvenile caseload consisted of 32 cases. There were 29 new juvenile filings: 23 delinquency cases and six child protective cases. Further, in 2022 there were 12 children associated with new child protective filings and the Court served as temporary legal guardian for two children. The Court also finalized two adoptions, processed 26 adult personal protection actions and disposed of three miscellaneous family actions.

Leelanau County Courthouse

As employees of the Michigan Department of Corrections (MDOC) assigned to local courts, staff supervise convicted offenders that fall within the Thirteenth Circuit Court's jurisdiction. The probation/parole staff main close working relations with court personnel, law enforcement, Community Corrections and many other area partners to assure public safety and ensure offenders are well supervised. In 2022, the MDOC was partially staffed with eight agents and two secretaries covering the tri-county area. The MDOC averaged an annual caseload of 390 cases between the three counties in 2022, specifically 61 cases in Antrim County, 297 in Grand Traverse County and 32 in Leelanau County. In addition to supervising MDOC clients, each probation/parole agent must complete a Pre-Sentence Investigation Report (PSIR) for every Circuit Court conviction as well as supplement reports for follow up and re-sentencings. The PSIR includes the scoring from the Michigan Sentencing Guidelines and a detailed summary of the individual's history, which is then used by the Circuit Court judges as a tool to assist in determining the appropriate sentence for the crime committed and the specific offender. In 2022, 337 new PSIRs were created for the Thirteenth Circuit Court, including 54 for Antrim County, 257 for Grand Traverse County, and 26 for Leelanau County.

337 PSIs were created by MDOC agents in 2022

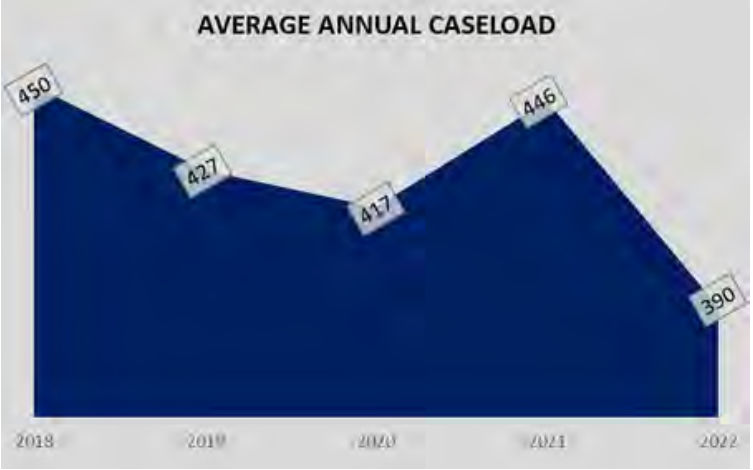

MDOC averaged a caseload of 390 per month in 2022

The Court collects fines, costs, court-appointed attorneys' fees, restitution, and crime victim fund payments from convicted felons. The funds collected are used to help support the public libraries, assist in defraying the costs of providing court-appointed counsel for indigent defendants and serve as reimbursement to crime victims for losses they may have suffered.

In 2022, the 13th Circuit Court collected $209,028 in criminal restitution for distribution to local victims of crime.

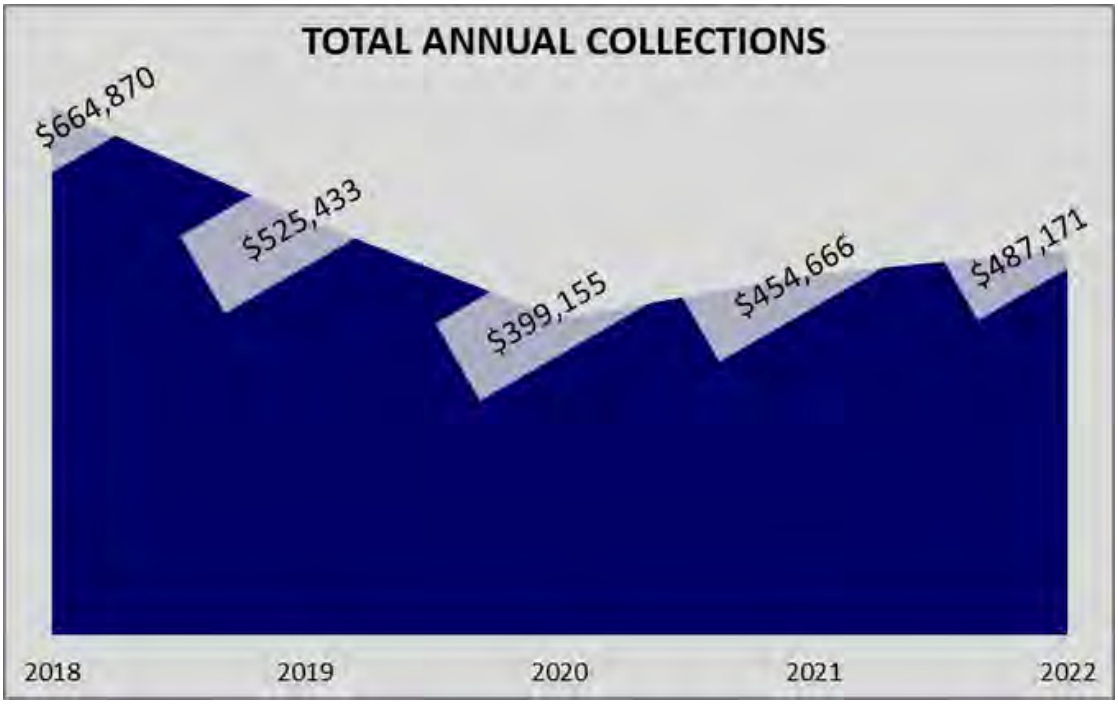

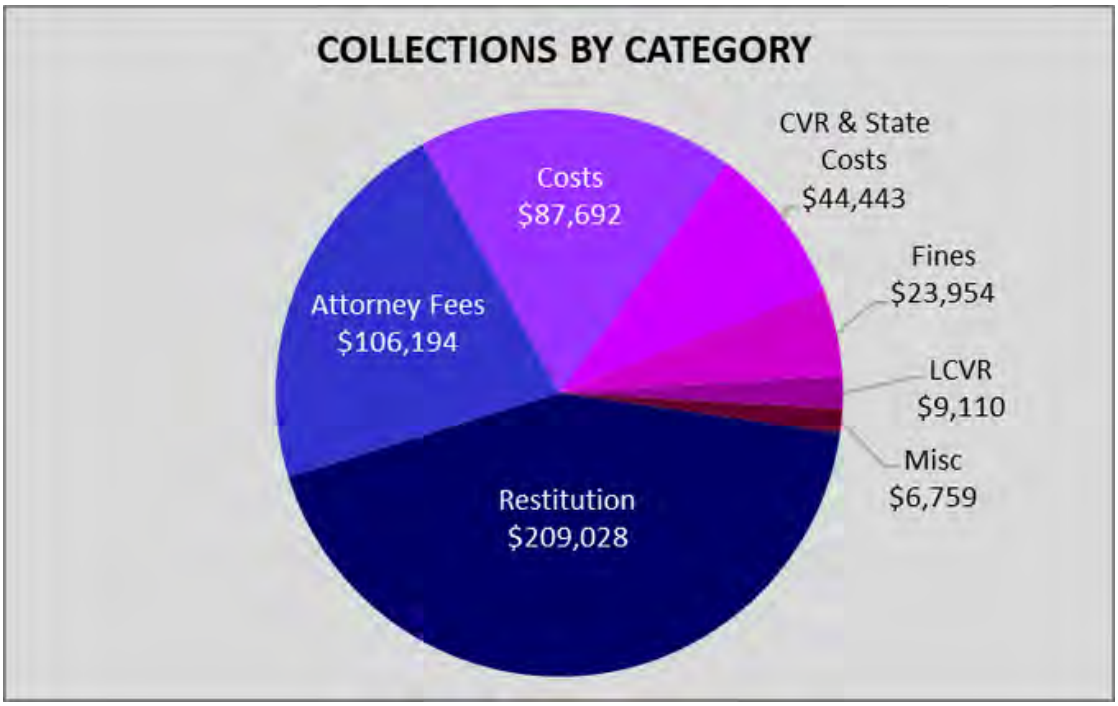

TINA BRADEN
RECOGNIZED FOR 5 YEARS WITH THE 13TH CIRCUIT COURT-FRIEND OF THE COURT

GETCHEN OSIM
RECOGNIZED FOR 5 YEARS WITH THE 13TH CIRCUIT COURT-FRIEND OF THE COURT

HON. KEVIN A. ELSENHEIMER
RECOGNIZED FOR 5 YEARS WITH THE 13TH CIRCUIT COURT

HOLLY DAVISON
RECOGNIZED FOR 5 YEARS WITH GRAND TRAVERSE COUNTY FAMILY DIVISION

HEATHER PREVO
RECOGNIZED FOR 10 YEARS WITH GRAND TRAVERSE COUNTY FAMILY DIVISION

JEFFREY BURDICK
RECOGNIZED FOR 15 YEARS WITH GRAND TRAVERSE COUNTY FAMILY DIVISION

AMANDA FLOWERS
RECOGNIZED FOR 15 YEARS WITH GRAND TRAVERSE COUNTY PROBATE COURT

ANGELA PELLETIER
RECOGNIZED FOR 20 YEARS WITH 13TH CIRCUIT COURT-FRIEND OF THE COURT

JULIE DUBAY
RECOGNIZED FOR 20 YEARS WITH 13TH CIRCUIT COURT-FRIEND OF THE COURT

HON. JENNIFER L. WHITTEN
APPOINTED BY GOVERNER WHITMER ON FEBRUARY 3, 2022. JUDGE WHITTEN WAS SWORN IN BY CHIEF CIRCUIT COURT JUDGE KEVIN A. ELSENHEIMER ON MARCH 4, 2022 AND STARTED ON THE BENCH ON MARCH 7, 2022.

TERI QUINN
RETIRED FEBRUARY 4, 2022 FROM THE 13TH CIRCUIT COURT ADMINISTRATOR'S OFFICE
26 YEARS

WILLIAM HEFFERAN
RETIRED JUNE 3, 2022 FROM ANTRIM COUNTY FAMILY DIVISION
26 YEARS

JOSEPH POVOLO
RETIRED AUGUST 12, 2022 FROM LEELANAU COUNTY FAMILY DIVISION
34 YEARS

KATHY NIXON
RETIRED SEPTEMBER 6, 2022 FROM GRAND TRAVERSE COUNTY FAMILY DIVISION
13 YEARS

HON. THOMAS G. POWER
RETIRED DECEMBER 31, 2022 FROM 13TH CIRCUIT COURT
30 YEARS

BOARD OF COMMISSIONERS
Jamie Kramer, District #1
James S. O'Rourke, District #2
Douglas Rexroat, District #3
Ty Wessell, District #4
Kama Ross, District #5
Gwenne Allgaier, District #6
Melinda C. Lautner, District #7

Deborah Allen, County Administrator

Leelanau County Government Center
8527 E. Government Center Drive, Suite #101
Suttons Bay, Michigan 49682
(231) 256-9711 ♦ (866) 256-9711 toll free
(231) 256-0120 fax
www.leelanau.gov ♦ dallen@leelanau.gov

Resolution #2024 - ____

LEELANAU COUNTY
2024 GENERAL APPROPRIATIONS ACT RESOLUTION

A resolution to appropriate monies and adopting the 2024 Leelanau County Budget, including the General Fund budget and the several Special Revenue Fund budgets.

It being the finding and opinion of the Leelanau County Board of Commissioners:

WHEREAS, the Uniform Budgeting and Accounting Act, Public Act 621 of 1978, requires that each local unit of government adopt a balanced budget for all required funds; and

WHEREAS, county offices, the courts, county departments, and others have submitted requests for a county appropriation in the 2024 budget; and

WHEREAS, the Board of Commissioners Executive Board has had under consideration the taxes for the local units of government and the budgetary needs of various county departments and other budgetary units; and

WHEREAS, the Board of Commissioners has taken into consideration the fact that there are certain required functions of county government or operations which must be budgeted at serviceable levels in order to provide statutory and constitutionally required services and programs; and

WHEREAS, the Board of Commissioners annually adopts a balanced budget and authorizes appropriations subject to the conditions set forth in its annual General Appropriations Act Resolution; and

WHEREAS, the budget contains anticipated revenues and expenditures from certain grant programs, which will also require approval of agreements with granting agencies at various times during the fiscal year; and

WHEREAS, the Board of Commissioners Executive Board, after considerable deliberation, has recommended adoption of the budgets and reports attached to and made part of this Appropriations Act.

In recognition of the above listed findings and opinions:

NOW, THEREFORE, BE IT RESOLVED, that the attached 2024 Leelanau County General Fund Operating Budget, the 2024 Special Revenue Fund Budgets, and the 2024 Budget Rules, as set forth in the Board of Commissioners Executive Board Recommended Budget, is hereby adopted on a basis consistent with Leelanau County's budget process and subject to all county policies regarding the expenditure of funds and the conditions set forth in this resolution.

BE IT FURTHER RESOLVED, the Leelanau County Board of Commissioners appropriates monies supported by various 2024 revenues and to authorize expenditures within the lump sum Activity Level totals for each of the various General and Special funds.

BE IT FURTHER RESOLVED, that the adopted budget is based on current estimates of revenues and expenditures, and that the Board of Commissioners may find it necessary to adjust budgeted revenues and expenditures from time to time during the year, provided the budget remains in a balanced state.

BE IT FURTHER RESOLVED, the Leelanau County Board of Commissioners, for purposes of the Truth in Budgeting Act, establishes a levy of 4.3575 mills, of which 3.3580 mills are allocated operational purposes, .5000 mills are voted road funds[i], .3134 are voted senior services[ii], and .1861 are voted Early Childhood[iii].

BE IT FURTHER RESOLVED, that all county elected officials and county department heads shall abide by the 2024 Budget Rules, as adopted and amended by this Board and that the budgeted funds are appropriated contingent upon compliance with all approved county policies and procedures; and

BE IT FURTHER RESOLVED, that the 2024 Authorized Staffing Levels contained in the budget shall limit the number of permanent employees who can be employed in all departments, offices, and the courts, and no funds are appropriated for any permanent position or employee not on the approved 2024 Authorized Staffing Levels.

BE IT FURTHER RESOLVED, the Board of Commissioners authorizes the use of budgeted funds as herein governed by the 2024 Authorized Vehicle Levels for the purchase of vehicles and necessary equipment.

BE IT FURTHER RESOLVED, that an appropriation is not a mandate to spend, but shall limit the amount which may be spent for such purposes as are defined by the Board of Commissioners and which shall be limited to the 2024 calendar year.

BE IT FURTHER RESOLVED, that any county department, agency, board, commission or unit of government that accepts a County appropriation shall do so, subject to the understanding that they will be subject to an inspection and/or audit by the Leelanau County Board of Commissioners or its designee.

BE IT FURTHER RESOLVED, that the County Administrator is hereby re-appointed as Chief Administrative Officer, pursuant to the Uniform Budget and Accounting Act, with power to administer those duties in connection with the County budget, to prepare, present, and monitor the annual operating budget jointly with the Accounting/Finance Department, and County Treasurer, and other duties as may be from time to time delegated to the Office of Administrator by this Board; and

BE IT FURTHER RESOLVED, that, in the event the United States Government or State of Michigan fails to provide certain revenue transfer payments as required by law and/or contractual agreements between the United States Government or State of Michigan and Leelanau County, the specific programs funded by such state revenue transfer payments shall bear the full impact of such revenue reduction. In the event the United States Government or State of Michigan defaults or otherwise fails to provide general, unrestricted revenue transfer payments, the Board, upon the recommendation of the Executive Board of the Leelanau County Board of Commissioners, shall allocate said revenue reduction in its legislative judgment. The Leelanau County Board of Commissioners cannot, and will not, absorb the program costs created by revenue transfer payment defaults by the United States Government or State of Michigan.

---

[i] As approved by voters at the August 2, 2022, Primary Election
[ii] As approved by voters at the August 4, 2020, Primary Election
[iii] As approved by voters at the November 5, 2019, General Election

LEELANAU COUNTY
2024 BUDGET RULES

1. Department heads and/or elected officials are responsible for assuring that expenditures do not exceed approved budget(s) for their respective departments, and may authorize expenditures up to $4,500.00 per item. Payment for all expenditures, however, is subject to approval by the Board of Commissioners through the regular monthly claims payment process.

2. Capital purchases in excess of $5,000.00 shall be tagged and added to the county's fixed asset inventory. The department head and/or elected official are responsible for this requirement to occur after coordination of payment by the Accounting/Finance Department.

3. The County Administrator, on behalf of all departments, is responsible for procuring all capital items and/or service contracts in excess of $10,000.00 according to county purchasing procedures and subject to proper advertising with all bids to be awarded by the Board of Commissioners at a regularly scheduled meeting.

4. The Chief Administrative Officer (County Administrator) together with the Finance Director shall jointly be responsible for assuring that any transfer or expenditure in excess of an approved departmental budget is made only after approval of the Board of Commissioners and that all transfers or expenditures are charged to an approved departmental budget.

5. The Chief Administrative Officer (County Administrator) together with the Finance Director shall jointly be responsible for assuring departmental budgets are charged for salaries and wages in accordance with the adopted Authorized Staffing Levels for their respective budgets.

6. The approved Authorized Staffing Level contained in the budget shall limit the number of employees who can be employed and no funds are appropriated for any position or employee not on the Authorized Staffing Level. Further, the Board of Commissioners expressly prohibits department heads from utilizing personal service contracts to circumvent the intent of the Board of Commissioners in its action establishing Authorized Staffing Levels. The Board of Commissioners must specifically approve any deviations.

7. Certain positions contained in the Authorized Staffing Level which are supported in some part by a grant, cost-sharing, or other source of outside funding, are only approved contingent upon the county receiving the anticipated revenues. In the event outside funding is not received, or the county is notified that funding will not be received, then said positions shall be considered not funded and removed from the Authorized Staffing Level.

8. The Finance Director shall be responsible for assuring that allotments to other agencies in excess of 25% of the approved annual budget in any calendar quarter are made only after the County Board of Commissioners has approved them.

9. The Finance Director shall prepare and submit a monthly Budget Transfer and Expenditure Control Report to the Board of Commissioners prior to the regular monthly board meeting. The Finance Director shall prepare the appropriate paperwork and submit it to the Board of Commissioners prior to the regular monthly board meeting. This report shall be in a format as prescribed by the Board of Commissioners and shall be reconciled to the County Treasurer's monthly Trial Balance.

10. Any budget amendments or transfers of funds shall only occur after written recommendation of the Executive Board and after being approved by the Board of Commissioners, by resolution.

11. Pursuant to county policy, vendors who enter into a service contract with the county shall furnish a certificate of insurance, unless waived, in acceptable form as determined by the Board of Commissioners and file the certificate with the County Clerk prior to the commencement of any work or delivery of service or product.

12. All invoices, travel vouchers and payment requests must be submitted to the Accounting/Finance Department for processing of payment on a timely basis, within the quarter the request was made.

13. All mileage for county owned vehicles will be charged to the account 940 Rental Charges in each respective budget using county owned vehicles. The Motor Pool Fund 661 will be credited with the mileage charges for county owned vehicles. Any purchases of county owned vehicles would be charged to the Motor Pool Fund 661. All repair and maintenance charges on county owned vehicles shall be charged to the respective budgets using county owned vehicles.

14. All capital items and professional services over $5,000.00 shall require the solicitation of competitive written sealed bids. A minimum of three bids is encouraged. State bids may be utilized when applicable.

15. The County Administrator may authorize expenditures up to $10,000.00 for unexpected items or services when according to the department head, the item or service requested can be paid from the department's approved budget. The Board of Commissioners through the regular monthly committee process will review all claims for potential payment.

16. All donations received in excess of $500.00 on behalf of Leelanau County shall be approved by the Board of Commissioners. The County Administrator shall provide monthly written reports outlining all donations received.

    a) Any non-cash donations, tangible goods and/or mercantile with an approximate value of over $250.00 donated to Leelanau County shall be approved by the Board of Commissioners prior to acceptance.

b) Any proactive fundraising effort, as well as fundraising activity administrated through an external organization or vendor, must have prior Board approval, a stated end date and a specific restricted goal. If there is an associated administrative fee associated with the fundraising method, there must also be Board approval of the fee. If an external organization or vendor is utilized, proper controls over the account must be established by the Leelanau County Treasurer and Finance Director. When cumulative funds are received and exceed $500.00, they will be transferred from Trust and Agency to a special fund and held pursuant to Board Policy and Budget Rules. Once a special fund is created for the stated purpose, transfers may be for lesser amounts.

17. Per diem rates will be as follows:
    $70.00/ Full Day
    $40.00/One Half Day

18. The Board of Commissioners shall pay claims made against Leelanau County once per month after approval. Payments for post audit claims shall be authorized only under the following circumstances, for items within the approved budget:

    a) Implementation of any and all provisions of collective bargaining agreements and other compensation plans adopted by the Board of Commissioners including payroll, related county and employee taxes, and withholding payments.

    b) Payment of premiums on insurance policies and self-insurance pool fees including, but not limited to, health insurance, life insurance, dental insurance, unemployment insurance and others.

    c) Payments provided for within the provisions of any and all contracts and grants authorized by and approved by the Board of Commissioners or County Administrator under Item 15.

    d) Replenishment of imprested funds within the various departments to the extent provided in departmental budgets.

    e) Postage to the extent provided in departmental budgets.

    f) Jury, witness and attorney fees by order of the Circuit Court, District Court, and Probate Court.

    g) Any invoices providing for a discount if paid within a specified period provided such invoices shall not be paid in such time period will allow consideration by the Board of Commissioners without loss of discount and, further, provided that they have been budgeted in the departmental budget. Additionally, any invoices not paid within a specified period, will be assessed a late payment penalty provided that they have been budgeted in the departmental budget.

    h) Any and all fuel charges.

    i) Any and all utility billings.

j) Travel advances, registration, and mileage reimbursement to the extent provided in departmental budgets.

k) Department of Health and Human Services payments.

l) State of Michigan payments.

m) Any emergency claim as authorized by the County Administrator requiring payment prior to the next Board of Commissioners meeting.

n) Any other payments prescribed by law.

o) Refunds.

EXECUTIVE DOCUMENT SUMMARY

Department: Board of Commissioners

Contact Person: Stephanie Rustem

Telephone Number: 517-285-8103

Submittal Dates

☑ Select Meeting Type: Executive Board

Date of Meeting: 11/14/2023

Financial/Source Selection Method

☑ Select One: GTB 2% Allocation Request

☐ Other:

☐ *Account No.:*

☐ *CIP Project?*

☐ *If Grant, Match Account No.:*

Vendor:

Address/
Phone:

Description: 2% Allocation Request/Agr.

Budgeted Amount: $ 1,186,992.00 Contracted Amount: $ 25,000.00

Document Description

☐ **Request to Waive Board Policy on Bid Requirements** ☐ **Financial Review Completed** ☐ **Department Head/Elected Official Authorization**

The Discovery Center Pier is requesting the County Board of Commissioners approve a Grand Traverse Band of Ottawa and Chippewa Indians 2% Allocation Application, for funding to go towards an adaptive kayak launch in Greilickville (full application is attached).

Suggested Recommendation:

I move to recommend that the County Board of Commissioners approve the Grand Traverse Band of Ottawa and Chippewa Indians 2% Allocation Application on behalf of the Discovery Center and Pier for $25,000.00 to help fund an adaptive kayak launch, as presented.

Department Approval: Date: 11/07/2023

Tribal Council Allocation of 2% Funds
Application Form

PLEASE NOTE:

Under the terms of the consent decree, which settled *Tribes v. Engler* (Case No. 1:90-CV-611, U.S. Dist. Ct., West. Dist. Mich.), the Grand Traverse Band of Ottawa and Chippewa Indians, as defined in the stipulation, has agreed to pay 2% of its video gaming revenue to local units of government (i.e., local township, village, city, county board of commissioners, public school system).

***ONLY APPPLICATIONS FROM LOCAL UNITS OF GOVERNMENT LOCATED WITHIN GTB'S 6-COUNTY SERVICE AREA WILL BE CONSIDERED FOR 2% FUNDING**

1. Allocation Cycle: ☐ JUNE – New submission date, Postmarked by **MAY 31st**
   ☑ DECEMBER – New submission date, Postmarked by **NOVEMBER 30th**

2. Name of Applicant: Leelanau County Board of Commissioners/Discovery Center & Pier
   Address: 8527 E. Government Center Drive, Suite 101
   Suttons Bay, MI 49682
   Phone #: 231-256-8100 Fax #: 231-256-0120
   Printed Name: Ty Wessell

   - **Authorized Signature:** _____
     (Signature of local unit of government official; e.g., county/city official, township supervisor, village president, college president, school superintendent)

   Title: County Board Chairman
   E-mail address: dallen@leelanau.gov

   Printed Name of contact person: Stephanie Rustem
   Telephone #: 517-285-8103 Fax #: _____
   E-mail address: stephanie@discoverygreatlakes.org

3. Type of Applicant:
   _____ Local Government _____ Local Court
   _____ Township _____ County Commissioner _____ Road Commission
   _____ Public School District _____ College _____ Charter School
   _____ Public Library _____ Sheriff/Police Department _____ Fire Department
   X 501c3 applying through local unit of government (name): Discovery Center & Pier

4. Fiscal Data: Amount Requested: $ 25,000 Percent: 2 %

Local Leveraging: (Match) $ 1,186,992 Percent: 98 %

Total Budget: $ 1,211,992 Percent: 100 %

5. Target Population numbers: 200 Children 500 Adults _____ Elders

(Indicate the number of GTB members) 115 Total GTB member Community _____ Others

6. Counties Impacted: _____ Antrim _____ Benzie _____ Charlevoix

x Grand Traverse x Leelanau _____ Manistee

7. Brief Description (purpose of funding); include statement of need:

The purpose of this project is to purchase and install an adaptive kayak launch as part of the next phase of the Discovery Pier Project which is transforming Traverse City's old coal dock into a barrier-free hub for Great Lakes education and recreation. The Grand Traverse region lacks infrastructure that would allow kayakers and canoers to launch their vessels directly into Grand Traverse Bay. Currently, adaptive kayak launches exist on rivers that lead to the Bay, however, the closest launch that goes directly into a Great Lake is more than 40 miles away. Installing an adaptive kayak launch at the Discovery Pier site would significantly improve canoeing and kayaking opportunities for people living in our region. After the launch is installed, we are planning to partner with several different organizations, including the Grand Traverse Band of Ottawa and Chippewa Indians, to provide canoeing and kayaking educational clinics so more people can develop connections to the Great Lakes. The installation of an adaptive canoe and kayak launch will be accompanied by other site improvements including parking lot paving along the M-22 corridor and the construction of an ADA bathroom facility. These barrier-free improvements will help us ensure that people of all ages, needs, and abilities can enjoy Great Lakes recreational and educational opportunities which some have been excluded from in the past.

8. This question only pertains to Indian Education Programs of Public School Systems. If you are not an Indian Education Program of a Public School system, skip to question 9.

(a) **Program formula: (1) $5,000, up to $10,000 per school district + (<u>$1,000, up to $1,500</u> x # of GTB member students) = allocation. The increase to the formula will be determined by the previous timely 2% report received, and the data provided within the report on the success of the school's Indian Education Program as a result of the 2% allocation.**

<u>Please note</u>: 1) In completing this section, only provide the student numbers of currently enrolled GTB members; do not include the general Native American data of your school system; and 2) there will be a cap of $100,000, up to $125,000 per school, based on the school's GTB membership count and data provided within the 2% report received from the previous year.

(b) Recommendation from Parent Committee: ☐ YES ☐ NO

<u>Please have the Parent Committee sign the attached Certification Form.</u>

(c) Describe parent involvement in project: _____

_____

(d) Does the school receive Title VII Indian Education Funds? ☐ YES ☐ NO

If yes, how much: _____

9. What are the start and completion dates of the proposed project?

Start 02/01/2024 Completion 12/31/2024

10. Has applicant received prior awards through the Tribe's 2% funding allocation?

☑ YES ☐ NO. If yes, please list the start and end dates and amount:

1/26/2023 - 1/26/2024 and amounts: $15,000

_____ - _____ and amounts: _____

_____ - _____ and amounts: _____

11. Is the proposed project new _____ or a continuation project X?

If this is a continuation project, please explain why there is a need to continue funding:

This project is the next phase of the Discovery Pier Project which is redeveloping Traverse City's old coal dock into a barrier-free hub for Great Lakes education and recreation.

12. If the previous project has been completed, did you submit your 2% report? ☐ YES ☐ NO.

The 2% report must be submitted one year from the date you received your 2% award. If your report has not been submitted, <u>your current application will not be considered!</u> 2% Reports are mandatory for future grant considerations. Mail your 2% report to: Attn: 2% Reports; GTB, 2605 N.W. Bay Shore Drive, Peshawbestown, MI 49682.

13. Impact of Gaming on local program: (e.g., increase in student population, resulting from increase in Tribal employment or increase in emergency services to Casino patrons).

Programs offered at Discovery Center & Pier will be available for enrollment by casino visitors and employees.

14. How will the success of the project be assessed (evaluation plan)? The success of the project will be evident as direct Great Lakes canoeing and kayaking access will be improved. We plan to track the number of people who use the site using data from security cameras and programs.

15. If new staff is required, will preference be given to Native American applicants?

☐ YES ☑ NO

16. Budget: Please attach a one-page itemization of the planned budget. Include explanation for each category of the budget.

<u>IMPORTANT!! BEFORE YOU MAIL YOUR 2% APPLICATION, PLEASE REMEMBER TO:</u>

1) Execute authorized signature on first page, question #2.
2) Attach 1-page budget
3) Attach Parent Committee Certification Form if application is from an Indian Education/Title VII Program.
3) Submit by appropriate deadline**:**
   - **<u>If for June cycle, postmarked by May 31st.</u>**
   - **<u>If for December cycle, postmarked by November 30th.</u>**

Mail completed 2% applications to:

Attention: 2% Program
Grand Traverse Band of Ottawa and Chippewa Indians
2605 N.W. Bay Shore Drive
Peshawbestown, MI 49682

If you have any questions, please call 231-534-7601.

Grand Traverse Band of Ottawa and Chippewa Indians 2% Indian Education Parent Committee Certification Form

Instructions: By filling out this form, you are certifying that only one 2% application is being submitted for your school district's Indian Education/Title VII program.

We affirm that we have participated in providing information regarding the content of this 2% application for the Grand Traverse Band of Ottawa and Chippewa Indians (GTB).

We affirm that previous 2% reports have been submitted to GTB for 2% funding that this school district has received from GTB.

As current members of this school district's Parent Committee for the Indian Education Program/Title VII, we approve of and certify that this 2% application is being submitted on behalf of the _____ School District.
(Name of school district)

Print Name	Sign Name	Date
Print Name	Sign Name	Date
Print Name	Sign Name	Date
Print Name	Sign Name	Date
Print Name	Sign Name	Date
Print Name	Sign Name	Date

Discovery Pier Project – Phase 1B Improvements

Legend

A – Paved Parking Lot

B – ADA Bathroom Facility

C – Adaptive Kayak Launch and Boarding Platform

Discovery Pier Project Budget - Phase 1B				
Item Description	**Unit**	**Quantity**	**Unit Price**	**Price**
Mobilization and General Conditions	1	LS	45,000.00	45,000.00
Kayak Launch Piling	11	EA	6,000.00	66,000.00
Kayak Launch System with 80' Gangway	1	LS	227,000.00	227,000.00
Floating Platform near Kayak Launch (High LL)	1340	SF	83.00	111,220.00
Southwest Sheet Pile Wall Cap	2700	LBS	3.00	8,100.00
Bathroom/Office/Storage Bldg	864	SF	600.00	518,400.00
Parking Lot Paving	11200	SF	7.00	78,400.00
15% Construction Contingency				115,998.00
Marine Engineering Services (5%)				22,866.00
Architectural Services (8%)				19,008.00
Project Total				**1,211,992.00**

EXECUTIVE DOCUMENT SUMMARY

Department: Board of Commissioners Contact Person: Kerry Maloney Telephone Number: 231-631-2912	**Submittal Dates** ☑ Select Meeting Type: Executive Board Date of Meeting: 11/14/2023
Financial/Source Selection Method ☑ Select One: GTB 2% Allocation Request ☐ Other: ☐ *Account No.:* ☐ *CIP Project?* ☐ *If Grant, Match Account No.:*	Vendor: Address/ Phone: **Description:** 2% Allocation Request/Agr.

Budgeted Amount: $ 592,600.00 Contracted Amount: $ 50,000.00

Document Description

☐ **Request to Waive Board Policy on Bid Requirements** ☐ **Financial Review Completed** ☐ **Department Head/Elected Official Authorization**

The Habitat For Humanity-Grand Traverse Region is requesting the County Board of Commissioners approve a Grand Traverse Band of Ottawa and Chippewa Indians 2% Allocation Application, for funding to go towards the development of the New Waves Church Community, located in Elmwood Township (full application is attached).

Suggested Recommendation:

I move to recommend that the County Board of Commissioners approve the Grand Traverse Band of Ottawa and Chippewa Indians 2% Allocation Application on behalf of the Habitat For Humanity-Grand Traverse Region in the amount of $50,000.00 to help fund development of the New Waves Church Community, as presented.

Department Approval: Date: 11/07/2023

Tribal Council Allocation of 2% Funds
Application Form

PLEASE NOTE:

Under the terms of the consent decree, which settled *Tribes v. Engler* (Case No. 1:90-CV-611, U.S. Dist. Ct., West. Dist. Mich.), the Grand Traverse Band of Ottawa and Chippewa Indians, as defined in the stipulation, has agreed to pay 2% of its video gaming revenue to local units of government (i.e., local township, village, city, county board of commissioners, public school system).

***ONLY APPPLICATIONS FROM LOCAL UNITS OF GOVERNMENT LOCATED WITHIN GTB'S 6-COUNTY SERVICE AREA WILL BE CONSIDERED FOR 2% FUNDING**

1. Allocation Cycle: _____ JUNE – New submission date, Postmarked by **MAY 31st**
   X DECEMBER – New submission date, Postmarked by **NOVEMBER 30th**

2. Name of Applicant: Board of Commissioners/Habitat For Humanity, Grand Traverse Region
   Address: 8527 E. Government Center Dr., Suite 101
   Suttons Bay, Michigan 49682
   Phone #: 231-256-9711 Fax #: 231-256-0120
   Printed Name: Ty Wessell

- **Authorized Signature:** _____
  (Signature of local unit of government official; e.g., county/city official, township supervisor, village president, college president, school superintendent)

  Title: Chairman, County Board of Commissioners
  E-mail address: dallen@leelanau.gov

  Printed Name of contact person: Kerry Maloney
  Telephone #: 231-631-2912 Fax #: _____
  E-mail address: kerry@habitatgtr.org

3. Type of Applicant:

_____ Local Government	_____ Local Court	
_____ Township	_____ County Commissioner	_____ Road Commission
_____ Public School District	_____ College	_____ Charter School
_____ Public Library	_____ Sheriff/Police Department	_____ Fire Department

X 501c3 applying through local unit of government (name): Habitat For Humanity-GTR

4. Fiscal Data: Amount Requested: $ $50,000 Percent: 11.8 %

Local Leveraging: (Match) $ $50,000 Percent: 11.8 %

Total Budget: $ $592,600 Percent: 100 %

5. Target Population numbers: 2 Children 2 Adults _____ Elders

(Indicate the number of GTB members) _____Total GTB member Community _____ Others

6. Counties Impacted: _____ Antrim _____ Benzie _____ Charlevoix

_____ Grand Traverse X Leelanau _____ Manistee

7. Brief Description (purpose of funding); include statement of need:

5 years in the making, the New Waves Church Community (NWCC) development is a $2.3m, fourteen-home development for HGTR homeowners on a 20-acre site owned by New Waves Church in Elmwood Township, Leelanau County, four miles west of downtown Traverse City.

Currently, 33% of households in Leelanau County are Asset-Limited, Income-Constrained and Employed (ALICE). With an average home price of $550,000 in the county, the pool of affordable homes / rentals is almost nonexistent. In fact, between our Maple City Crossings development and New Waves Church Community – we are currently building 100% of "for-sale" affordable home inventory in Leelanau County.

The community layout is built around a four-acre green space, with gardens, paths, and open areas. Eleven acres of the New Waves parcel are on separate 1/3-acre lots plus shared open space. Each energy efficient home will be approximately 1,100 square feet with three bedrooms, 1.5 baths, a one-car garages and unique front elevations. We expected to finish the first two homes by the Spring of 2024.

8. This question only pertains to Indian Education Programs of Public School Systems. If you are not an Indian Education Program of a Public School system, skip to question 9.

(a) **Program formula: (1) $5,000, up to $10,000 per school district + (<u>$1,000, up to $1,500</u> x # of GTB member students) = allocation. The increase to the formula will be determined by the previous timely 2% report received, and the data provided within the report on the success of the school's Indian Education Program as a result of the 2% allocation.**

<u>Please note</u>: 1) In completing this section, only provide the student numbers of currently enrolled GTB members; do not include the general Native American data of your school system; and 2) there will be a cap of $100,000, up to $125,000 per school, based on the school's GTB membership count and data provided within the 2% report received from the previous year.

(b) Recommendation from Parent Committee: _____ YES _____ NO

<u>Please have the Parent Committee sign the attached Certification Form.</u>

(c) Describe parent involvement in project: _____

_____

(d) Does the school receive Title VII Indian Education Funds? _____ YES _____ NO

If yes, how much: _____

9. What are the start and completion dates of the proposed project?

Start 10/23 Completion 05/24

10. Has applicant received prior awards through the Tribe's 2% funding allocation?

X YES _____ NO. If yes, please list the start and end dates and amount:

11/1/2018 - 3/25/2019 and amounts: $5,000

5/1/2017 - 10/16/2018 and amounts: $9,000

_____ - _____ and amounts: _____

11. Is the proposed project new X or a continuation project _____?

If this is a continuation project, please explain why there is a need to continue funding:

_____

_____

_____

12. If the previous project has been completed, did you submit your 2% report? ____X_____ YES_____ NO.

The 2% report must be submitted one year from the date you received your 2% award. If your report has not been submitted, your current application will not be considered! 2% Reports are mandatory for future grant considerations. Mail your 2% report to: Attn: 2% Reports; GTB, 2605 N.W. Bay Shore Drive, Peshawbestown, MI 49682.

13. Impact of Gaming on local program: (e.g., increase in student population, resulting from increase in Tribal employment or increase in emergency services to Casino patrons).

_____

_____

14. How will the success of the project be assessed (evaluation plan)? Our success is marked by each new homeowner signing their affordable mortgage and taking ownership of their new homes. These two homes will transfer ownership when they are completed in the winter of 2024.

15. If new staff is required, will preference be given to Native American applicants?

_____ YES _____ NO No new staff will be required.

16. Budget: Please attach a one-page itemization of the planned budget. Include explanation for each category of the budget.

IMPORTANT!! BEFORE YOU MAIL YOUR 2% APPLICATION, PLEASE REMEMBER TO:

1) Execute authorized signature on first page, question #2.
2) Attach 1-page budget
3) Attach Parent Committee Certification Form if application is from an Indian Education/Title VII Program.
3) Submit by appropriate deadline**:**
   - **If for June cycle, postmarked by May 31st.**
   - **If for December cycle, postmarked by November 30th.**

Mail completed 2% applications to:

Attention: 2% Program
Grand Traverse Band of Ottawa and Chippewa Indians
2605 N.W. Bay Shore Drive
Peshawbestown, MI 49682

If you have any questions, please call 231-534-7601.

Grand Traverse Band of Ottawa and Chippewa Indians 2% Indian Education Parent Committee Certification Form

Instructions: By filling out this form, you are certifying that only one 2% application is being submitted for your school district's Indian Education/Title VII program.

We affirm that we have participated in providing information regarding the content of this 2% application for the Grand Traverse Band of Ottawa and Chippewa Indians (GTB).

We affirm that previous 2% reports have been submitted to GTB for 2% funding that this school district has received from GTB.

As current members of this school district's Parent Committee for the Indian Education Program/Title VII, we approve of and certify that this 2% application is being submitted on behalf of the _____ School District.
(Name of school district)

Print Name	Sign Name	Date

Habitat GTR Budget for 2024 Home Builds (2 New builds)

REVENUE	Committed	Pending	Total
Private Grants/Foundation			
MSHDA Missing Middle	$ 160,000	$ -	$ 160,000.00
Tribe Grant		$ 50,000.00	$ 50,000.00
Oleson/Biederman	$ 35,000.00		
Foster Foundation	$10,000		$ 10,000.00
Corporations			
Community Partners	$5,000.00		$ 5,000.00
Individuals		$42,600.00	$ 42,600.00
Earned Income			
Itemize	$280,000.00		$ 280,000.00
In-Kind			
Land	$10,000.00	$0.00	$ 10,000.00
Other			
TOTAL REVENUE	$ 500,000.00	$ 92,600.00	$ 592,600.00
EXPENSES			**Total**
Salaries/taxes	$50,600		$ 50,600.00
Land	$10,000		$ 10,000.00
Costruction Costs	$506,000		$ 506,000.00
Closing Costs	$14,000		$ 14,000.00
Supplies	$8,000		$ 8,000.00
Contruction truck/fuel	$4,000		$ 4,000.00
Rent/Mortgage			$ -
Utilities			$ -
Maintenance			$ -
Evaluation			$ -
Other-			$ -
TOTAL EXPENSES (must match total revenue)			$ 592,600.00

EXECUTIVE DOCUMENT SUMMARY

Department: Board of Commissioners

Contact Person: Jon Stimson

Telephone Number: 231-631-2912

Submittal Dates

☑ Select Meeting Type: Executive Board

Date of Meeting: 11/14/2023

Financial/Source Selection Method

☑ Select One: GTB 2% Allocation Request

☐ Other:

☐ *Account No.:*

☐ *CIP Project?*

☐ *If Grant, Match Account No.:*

Vendor:

Address/
Phone:

Description: 2% Allocation Request/Agr.

Budgeted Amount: $ 49,500.00 Contracted Amount: $ 30,000.00

Document Description

☐ **Request to Waive Board Policy on Bid Requirements** ☐ **Financial Review Completed** ☐ **Department Head/Elected Official Authorization**

The Homestretch organization on behalf of the Provemont Pines Homeowners Association (HOA) is requesting the County Board of Commissioners approve a Grand Traverse Band of Ottawa and Chippewa Indians 2% Allocation Application, for funding to go towards the repairs of homes within the development (full application is attached).

Suggested Recommendation:

I move to recommend that the County Board of Commissioners approve the Grand Traverse Band of Ottawa and Chippewa Indians 2% Allocation Application on behalf of the Homestretch/Provemont Pines HOA in the amount of $30,000.00 to help fund repairs to the homes within the development, as presented.

Department Approval: Date: 11/07/2023

Tribal Council Allocation of 2% Funds
Application Form

PLEASE NOTE:

Under the terms of the consent decree, which settled *Tribes v. Engler* (Case No. 1:90-CV-611, U.S. Dist. Ct., West. Dist. Mich.), the Grand Traverse Band of Ottawa and Chippewa Indians, as defined in the stipulation, has agreed to pay 2% of its video gaming revenue to local units of government (i.e., local township, village, city, county board of commissioners, public school system).

***ONLY APPPLICATIONS FROM LOCAL UNITS OF GOVERNMENT LOCATED WITHIN GTB'S 6-COUNTY SERVICE AREA WILL BE CONSIDERED FOR 2% FUNDING**

1. Allocation Cycle: _____ JUNE – New submission date, Postmarked by **MAY 31st**
   X DECEMBER – New submission date, Postmarked by **NOVEMBER 30th**

2. Name of Applicant: Board of Commissioners/Homestretch, Provemont Pines HOA
   Address: 8527 E. Government Center Dr., Suite 101
   Suttons Bay, Michigan 49682
   Phone #: 231-256-9711 Fax #: 231-256-0120
   Printed Name: Ty Wessell

- **Authorized Signature:** _____
  (Signature of local unit of government official; e.g., county/city official, township supervisor, village president, college president, school superintendent)

  Title: Chairman, County Board of Commissioners
  E-mail address: dallen@leelanau.gov

  Printed Name of contact person: Jon Stimson, Executive Director
  Telephone #: 231-947-6001 Fax #: _____
  E-mail address: jon@homestretchhousing.org

3. Type of Applicant:

_____ Local Government	_____ Local Court	
_____ Township	_____ County Commissioner	_____ Road Commission
_____ Public School District	_____ College	_____ Charter School
_____ Public Library	_____ Sheriff/Police Department	_____ Fire Department

X 501c3 applying through local unit of government (name): Homestretch

4. Fiscal Data: Amount Requested: $ 30,000 Percent: 60 %

Local Leveraging: (Match) $ 17,500 Percent: 40 %

Total Budget: $ 49,500 Percent: 100 %

5. Target Population numbers: x Children x Adults x Elders

(Indicate the number of GTB members) x Total GTB member Community _____ Others

6. Counties Impacted: _____ Antrim _____ Benzie _____ Charlevoix

_____ Grand Traverse x Leelanau _____ Manistee

7. Brief Description (purpose of funding); include statement of need:

Provemont Pines, an affordable housing project in Leelanau County is requesting assistance with much needed repairs. The 2% funds would be used for deferred maintenance and hazardous conditions from 14 years of exposure and settling of soils around the units. Several of the concrete patios at the rear entries have settled which creates a step higher than 8-1/4" allowed by building code. These patios will have injection material placed underneath to lift the patios back to their original height. The negative slope will also be corrected so that additional water does not enter the finished living area which has created unhealthy indoor air quality and degradation of insulation, wall material and furnishings. The elevated decks, stairs and deck boards need to be replaced with new materials. Some stair components have rotten treads. A patchwork of homeowner replacements has resulted in unsightly repairs. Some post to beam connections of the decks, which are 10 feet above the lower grade, need to be replaced with new posts, "sistered" beams and metal connectors. Several windows require new head flashings where leaks are occurring and there is additional siding removal and replacement that needs to be done. Approximately 50% of the window glazing has "fogged" due to a seal failure yet, the manufacturer's warranty has expired. There is an asphalt driveway which leads to the units off St Joseph Street which has several potholes and large cracks that needs to be addressed plus a "seal coat" applied to the entire driveway. Four units have large cracks in the garage entrance/apron which will need to be removed and replaced. Regarding the "types of assisted units", these are 2 and 3-story Townhomes which have a garage under the main living area. They are 3-bedroom 2 bath units built in 2007. 90% of the units are occupied by families whose income is at or below 60% Area Median Income (AMI). One of the eight units for this request will not participate in the grant application as their income is above 120% AMI. The other funding sources are a grant through the Home Depot Foundation for $2,500, $7,000 from the Unit Owner's reserve account and $10,000 from Homestretch. The "overall impact" will be achieved by increased health and safety for the residents. The Community will benefit through maintained and improved Real Estate values and improved "curb appeal" of a State funded project.

8. This question only pertains to Indian Education Programs of Public School Systems. If you are not an Indian Education Program of a Public School system, skip to question 9.

(a) **Program formula: (1) $5,000, up to $10,000 per school district + (<u>$1,000, up to $1,500</u> x # of GTB member students) = allocation. The increase to the formula will be determined by the previous timely 2% report received, and the data provided within the report on the success of the school's Indian Education Program as a result of the 2% allocation.**

<u>Please note</u>: 1) In completing this section, only provide the student numbers of currently enrolled GTB members; do not include the general Native American data of your school system; and 2) there will be a cap of $100,000, up to $125,000 per school, based on the school's GTB membership count and data provided within the 2% report received from the previous year.

(b) Recommendation from Parent Committee: _____ YES _____ NO

<u>Please have the Parent Committee sign the attached Certification Form.</u>

(c) Describe parent involvement in project: _____

_____

(d) Does the school receive Title VII Indian Education Funds? _____ YES _____ NO

If yes, how much: _____

9. What are the start and completion dates of the proposed project?

Start June 1, 2024 Completion September 1, 2024

10. Has applicant received prior awards through the Tribe's 2% funding allocation?

x YES _____ NO. If yes, please list the start and end dates and amount:

7/13/21 to 2/1/2023 - _____ and amounts: $30,000

_____ - _____ and amounts: _____

_____ - _____ and amounts: _____

11. Is the proposed project new No or a continuation project Yes?

If this is a continuation project, please explain why there is a need to continue funding: This is a continuation of a previously funded MSHDA project that has fallen into disrepair. Conversely, if this request, or a portion thereof is granted, will end any future need for continued funding.

12. If the previous project has been completed, did you submit your 2% report? ___x___ YES _____ NO.

The 2% report must be submitted one year from the date you received your 2% award. If your report has not been submitted, <u>your current application will not be considered!</u> 2% Reports are mandatory for future grant considerations. Mail your 2% report to: Attn: 2% Reports; GTB, 2605 N.W. Bay Shore Drive, Peshawbestown, MI 49682.

13. Impact of Gaming on local program: (e.g., increase in student population, resulting from increase in Tribal employment or increase in emergency services to Casino patrons).

_____

_____

14. How will the success of the project be assessed (evaluation plan)? This project will provide more housing for future 80% AMI families and individuals as the units have a 99 year deed restriction. Affordable housing is greatly needed in Leelanau County, as is the maintenance and continuation of preexisting projects.

15. If new staff is required, will preference be given to Native American applicants?

___x___ YES _____ NO

16. Budget: Please attach a one-page itemization of the planned budget. Include explanation for each category of the budget.

<u>IMPORTANT!! BEFORE YOU MAIL YOUR 2% APPLICATION, PLEASE REMEMBER TO:</u>

1) Execute authorized signature on first page, question #2.
2) Attach 1-page budget
3) Attach Parent Committee Certification Form if application is from an Indian Education/Title VII Program.
3) Submit by appropriate deadline**:**
   - **<u>If for June cycle, postmarked by May 31st.</u>**
   - **<u>If for December cycle, postmarked by November 30th.</u>**

Mail completed 2% applications to:

Attention: 2% Program
Grand Traverse Band of Ottawa and Chippewa Indians
2605 N.W. Bay Shore Drive
Peshawbestown, MI 49682

If you have any questions, please call 231-534-7601.

Grand Traverse Band of Ottawa and Chippewa Indians 2% Indian Education Parent Committee Certification Form

Instructions: By filling out this form, you are certifying that only one 2% application is being submitted for your school district's Indian Education/Title VII program.

We affirm that we have participated in providing information regarding the content of this 2% application for the Grand Traverse Band of Ottawa and Chippewa Indians (GTB).

We affirm that previous 2% reports have been submitted to GTB for 2% funding that this school district has received from GTB.

As current members of this school district's Parent Committee for the Indian Education Program/Title VII, we approve of and certify that this 2% application is being submitted on behalf of the _____ School District.
(Name of school district)

Print Name	Sign Name	Date
Print Name	Sign Name	Date
Print Name	Sign Name	Date
Print Name	Sign Name	Date
Print Name	Sign Name	Date
Print Name	Sign Name	Date

1. Leveraged Funds

Homestretch has applied to the Home Depot Foundation for a $5,000 grant to be used as leveraged funds. While this is an optional item, the NEP request currently DOES NOT INCLUDE the Home Depot grant. In the event the Home Depot grant is awarded, the NEP request will be reduced to $44,500 from $49,500.

Please see the following pages for the Home Depot grant application as a reference.

Title

Application Reference

202102910

Application Type

Community Impact Grant

Overview

Grant Summary

Project Title

Provemont Condominiums Enhancement Program

Project Description

Title

The Home Depot Foundation funds will be used for deferred maintenance and hazardous conditions from 14 years of exposure and settling of soils around the units. Several of the concrete patios at the rear entries have settled which creates a step higher than 8-1/4" allowed by building code. These patios will have injection material placed underneath to lift the patios back to their original height. The negative slope will also be corrected so that additional water does not enter the finished living area which has created unhealthy indoor air quality and degradation of insulation, wall material and furnishings. The elevated decks, stairs and deck boards need to be replaced with new materials. Some stair components have rotten treads. A patchwork of homeowner replacements has resulted in unsightly repairs. Some post to beam connections of the decks, which are 10 feet above the lower grade, need to be replaced with new posts, "sistered" beams and metal connectors. Several windows require new head flashings where leaks are occurring and there is additional siding removal and replacement that needs to be done. Approximately 50% of the window glazing has "fogged" due to a seal failure yet, the manufacturer's warranty has expired. There is an asphalt driveway which leads to the units off St Joseph Street which has several potholes and large cracks that needs to be addressed plus a "seal coat" applied to the entire driveway. Four units have large cracks in the garage entrance/apron which will need to be removed and replaced. Regarding the "types of assisted units", these are 2 and 3-story Townhomes which have a garage under the main living area. They are 3-bedroom 2 bath units built in 2007. 90% of the units are occupied by families whose income is at or below 60% Area Median Income (AMI). One of the eight units for this request will not participate in the grant application as their income is above 120% AMI. The other funding sources are a grant through the Home Depot Foundation for $5,000. The "overall impact" will be achieved by increased health and safety for the residents. The Community will benefit through maintained and improved Real Estate values and improved "curb appeal" of a State funded project.

What are the specific outcomes that will be achieved from the funding from The Home Depot Foundation?

The proposed activities "will provide and preserve the quality and affordability of housing for present and future low- and moderate-income residents of the community" which is the language taken directly from our mission statement. One should note that Homestretch was specifically designed and created to "provide and preserve" affordable housing. The residents and the community will benefit through increased real estate values and "fair return on investment" as allowed in the original grant and Deed Restrictions from Michigan State Housing Development Authority (MSHDA). The MSHDA grant was utilized to construct 8 Townhouse style condominiums called Provemont Pines. A local builder named Wayne Tygue, was hired as the General Contractor and he procured all the materials from Home Depot in Traverse City, Michigan. Unfortunately, over 70% of the windows have a “seal failure” and are prone to becoming fogged and have heavy condensation between the panes. The HOA was told by the local salesperson that the glass warranty was only 10 years, not the regular 20 years due to the project being “commercial in nature”. The proceeds of the grant from the Home Depot Foundation will be utilized as Leveraged Funds to obtain an additional grant from MSHDA for approximately $50,000. The specific outcome is to make the needed repairs to maintain a safe and healthy living environment.

What are your project short and long term goals?

1. Replace failed window glazing
2. Repair and replace deck framing and surfaces
3. Repair and replace siding and window flashings
4. Restore the health and safety hazards for the residents
5. Enhance the surrounding neighborhood and maintain property values

Prior to construction, MSHDA will require income verification of all residents participating in the program to ensure income eligibility. Homestretch will be the General Contractor and solicit sub-contractors that meet Section 3 status (minority owned preference), collect all lien waivers, and create sworn statements for funding disbursement. After occupancy permits have been issued, the MSDA grant will be closed, and long-term monitoring will begin. Any properties which are sold prior to the 5-year forgiveness period will have a prorated recapture according to grant guidelines. This will be monitored by Homestretch who is responsible for compliance according to Deed Restrictions set forth when the units were constructed in 2007.

Grant Amount

Amount Requested

Title

$5,000.00

Grant Start Date:

Grant End Date:

Financials

Please upload an Excel spreadsheet with a detailed project budget

PPHOA_Estimate_v2.xlsx

Have you previously received funding from either The Home Depot, Inc. or The Home Depot Foundation?

No

Store Info

Primary Home Depot Store

Store 2726-Traverse City

Additional Home Depot Stores

Project Details

Project Info

Please list the city(ies) directly impacted by this project

Traverse City and Leelanau County

Please select state(s) being served

Michigan

Title

If your project is in a Metropolitan Area, please select it below

Volunteer Info

Number of Community volunteers participating

0

How will volunteers be used?

N/A

Facility Info

Facility Type

Residential Home/Building

Facility Type - Sub

Single Family Ownership

How many housing units/homes are expected to be constructed/rehabbed/refurbished?

8

Measures/Metrics

How many veterans will be impacted?

1

Veterans Population Served

Elderly

Title

Grant Terms

Do you agree to these terms?: I Agree

What E-Mail Address Should Payment Be Sent To?

jon@homestretchhousing.org

Org Leadership

Board of Directors

Board Member List

First Name	Last Name	Position(s)
Melissa	Begley	Accounting Manager
Jonathan	Stimson	Executive Director
Geoff	Streit	President
Sarna	Salzman	Treasurer
Tim	Burden	Board Member
Thomas	Cronin	Board Member
James	Henderson	Board Member
Claire	Karner	Board Member
Mary Ann	Lovett	Board Member
Marie	Porter	Board Member
Lane	Plamondon	Board Member

Is the board members list above correct.

Yes

Organization Information

Title

HomeStretch Nonprofit Housing Corporation/Home Depot #2726
400 Boardman Ave, Ste 10
TRAVERSE CITY, MI, 49684
Phone: 231-947-6001

Primary Contact

Melissa Begley
400 Boardman Ave Suite 10
Traverse City
Phone: 231-256-2117 x
Email: melissa@homestretchhousing.org

Home Depot associates who currently sit on your board

Is the list of associates who sit as board members above correct?

Yes

Attachments

bing maps

538 S Saint Joseph St, Lake Leelanau, MI 49653

Location: 44.976822, -85.716772

Location of Provemont Pines Condominiums

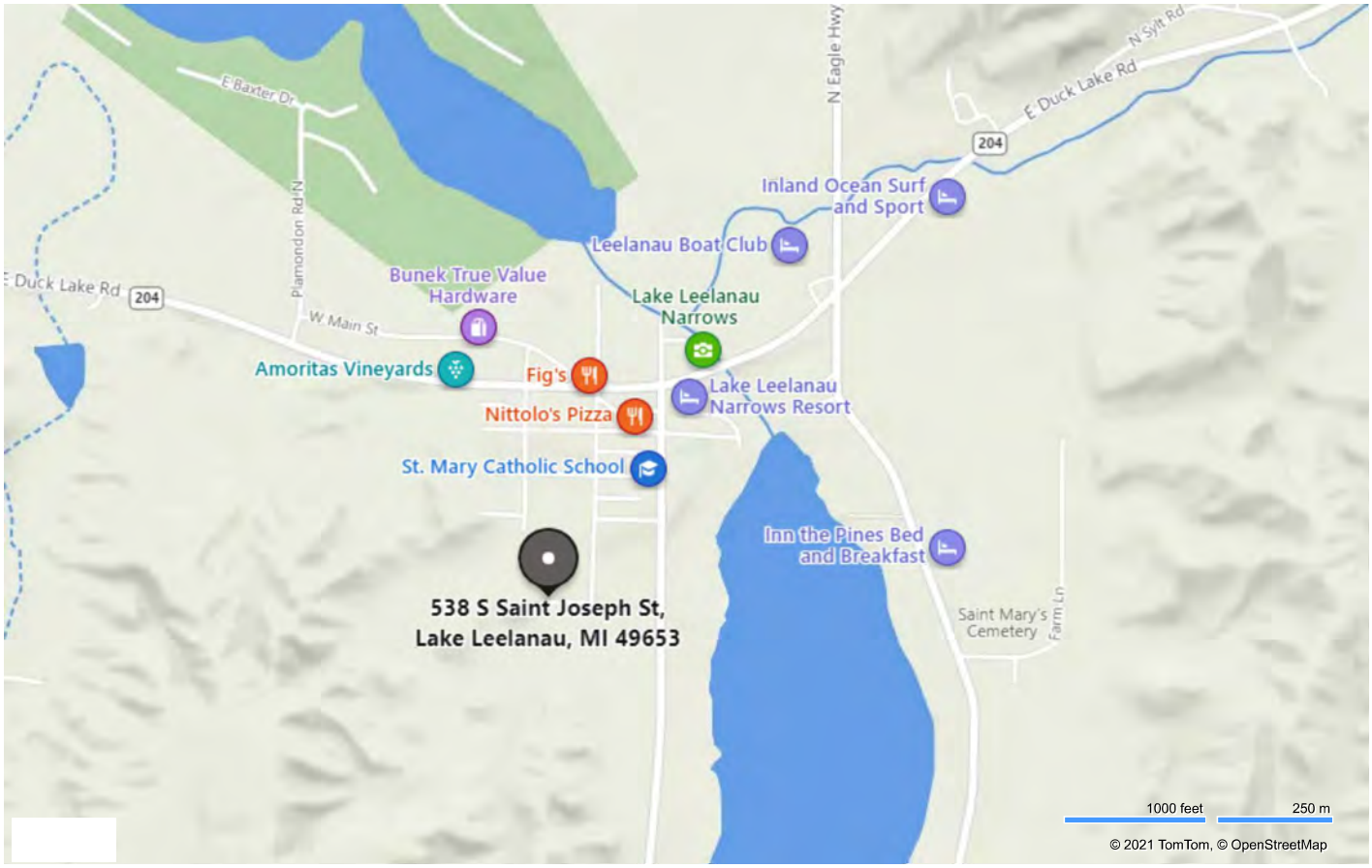

bing maps

Notes

Aerial location map of Provemont Pines Condominium with distance to grocery store of 1,812 feet.

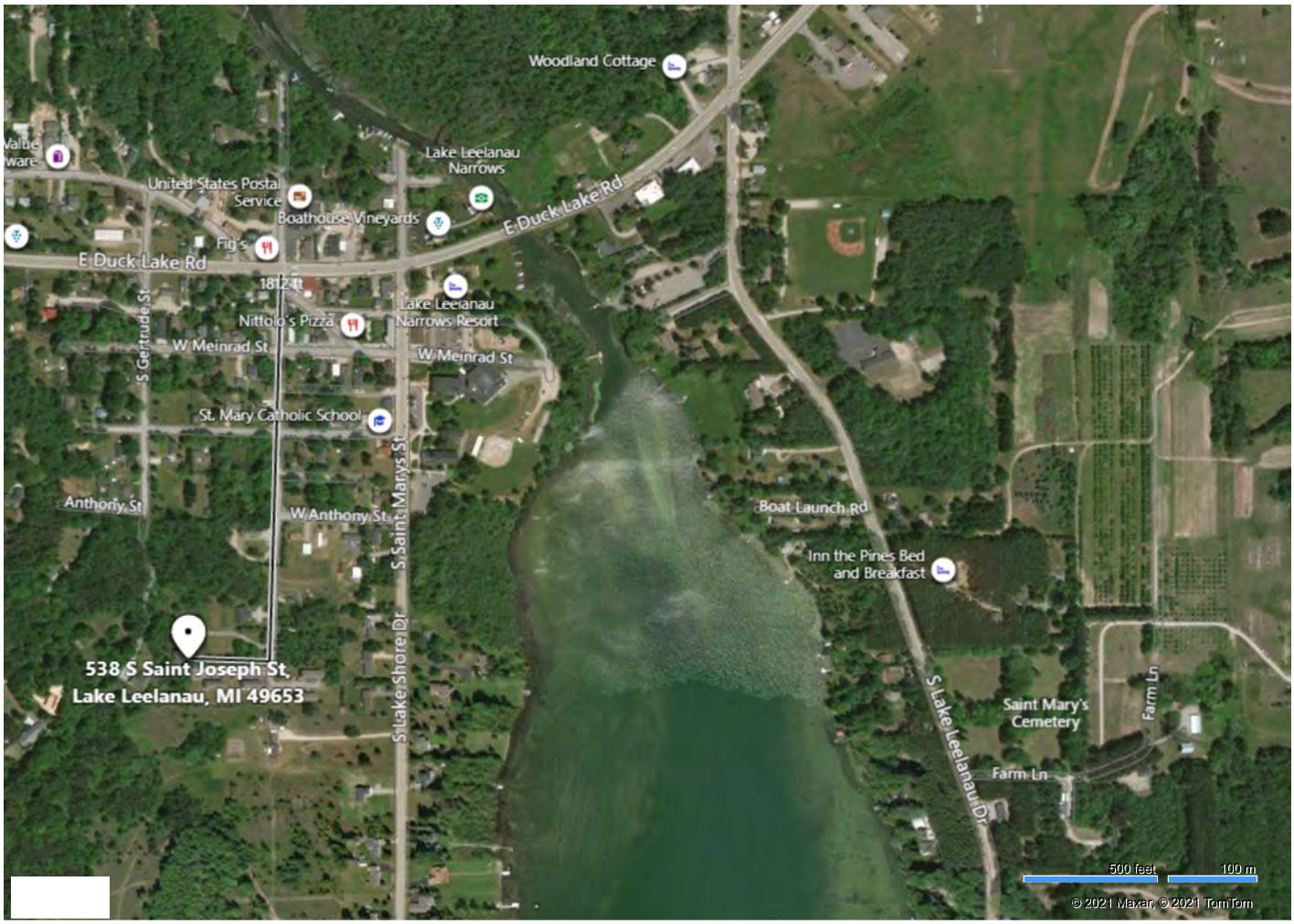

bing maps

Notes

Aerial map of Provemont Condominiums with Unit numbers

3. Work Plan Timeframes

We are allowing 3 months to complete the project. Most subcontractors are busy opening resort properties by Memorial Day Weekend. Afterwards, there is ample room to schedule to schedule other projects.

Estimated Start Date: June 1, 2022

Estimated Completion Date: September 1, 2022



5x18


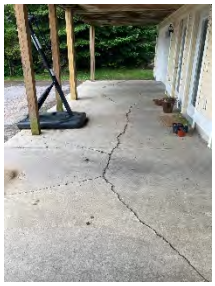












Village
Lake Leelanau


5. Letters of Support

There is 1 letter of support for the project:

1. Leland Township Supervisor

Leland Township
P.O. Box 238, Lake Leelanau, MI 49653
231-256-7546
Fax: 231-256-2465

Susan Och, Supervisor
lelandoch@gmail.com
231-409-2889

December 7, 2021

Michigan State Housing Development Authority (MSHDA)
Neighborhood Enhancement Program (NEP)
735 E. Michigan Ave.
PO Box 30044
Lansing MI 48909

To Whom It May Concern:

Please accept this letter as support for the application from Homestretch for repair work on Provemont Pines Condominium in Lake Leelanau, Leelanau County. This development consists of eight (8) units, 4 on the west side of S. St. Joseph St. and 4 on the east side. Leelanau County built these units in 2008 and they were sold between 2008 and 2010 with income and credit worthiness restrictions.

The units have housed teachers, construction workers, service workers, and young families. This condominium project has provided many Leland Township residents with the rare chance to become first time homeowners. As long term rentals have become more and more scarce, and as the cost of buying a home has skyrocketed beyond the reach of even well-paid professionals, we find that the lack of housing is sinking our ability to hire everyone from waitstaff to paramedics. It is important to preserve opportunities for the people who work here to live here. While this is just a small project, we are in a small community. Every little bit helps.

Homestretch, a non-profit housing corporation, is applying for a grant to assist the condo owners with necessary repairs such as replacement of window glass, deck repairs, patio repairs,

etc. The condominium owners in these units are asking for assistance with the repairs they need, yet can not afford.

Please support the NEP grant application and provide grant assistance to Provemont Pines condominium. If you need anything further or have any questions, feel free to contact me at the above address.

Thank you for your consideration.

Susan W. Och

Susan Och
Leland Township Supervisor

SUBMISSION REQUIREMENT PART 4 - REQUIRED PROGRAM PARAMETERS ACKNOWLEDGEMENT FORM

Administrative Guidelines. Review the requirements listed below which are relevant to MSHDA HID funding and certify that you understand that these **guidelines will be incorporated in any Grant Agreement executed pursuant to this submission. Failure to adhere to these guidelines may result in findings, disallowed costs, and/or withdrawal of funding.** If applicant does not understand any of these provisions, contact your HID Specialist.

As an applicant, I acknowledge that the following actions are program requirements:

✓ The submitting entity understands that as part of the formal approval process a partnership profile must be completed, reviewed and approved by MSHDA on the MSHDA
Matt 2.0 system prior to formal funding commitment via a written grant agreement.

✓ All expected attachments and all additional items indicated within this submission which
are being faxed or e-mailed in separately (if applicable) must be received prior to the deadline.

✓ Written and approved local program guidelines are required prior to a notice to proceed being issued to commit funds.

✓ All applicants receiving funding must adhere to local, state. and federal requirements and those specified for each Neighborhood Enhancement Program proposed component.

✓ The local program will be in compliance with MSHDA's requirement that all project costs be reasonable and necessary.

✓ Grant Administration Project Costs must be requested prior to grant execution and are capped at **10% of total project cost.**

✓ Grant Administration Project Costs must be documented and charged for allowable costs within allowable limits. Grant administration pays for the administration of the program (not projects): publications, marketing, office expenses, staff time, for working on the program.

Procurement of Administrative Services.

✓ Employees of the applicant will administer the program.

OR

✓ The program will be administered by non-government third party administrator.
Applicants contracting for grant administration services must complete a Third party
Administrator Management Plan.

✓ The applicant will solicit Request for Proposals (RFP) from at least two qualified third party administrative applicants unless the difference between the two proposals exceeds 25% and then a third proposal will be required. The RFP will include all significant evaluation factors and their importance, including the cost. The RFP will include the method of evaluation. Evaluation of proposals will be documented. The process will provide for maximum free and open competition.

✓ Once a grant is awarded, a Third Party Administrator Management Plan must be completed and signed by the grantee and submitted to MSHDA prior to the disbursement of funds.

✓ A copy of the applicant's contract with the administering government agency must also be submitted to MSHDA prior to the disbursement of funds.

✓ The procurement of an Administrator will meet one of the two criteria listed above and all documentation of the local or third party administrator’s previous experience with grant management will be taken into account as part of the selection process. In addition to providing names and titles, the applicant also must also list all current grants and pending applications from MSHDA, HUD, or other housing funding agencies to be administered

Compliance Acknowledgements.

✔ In regard to Environmental, the applicant will refer to program guidance and ensure (if determined applicable) all lead based paint and asbestos requirements are met.

✔ The applicant will implement a fair housing and equal opportunity complaint procedure within the program guidelines (see HID Complaint Procedure Policy).

✔ The applicant will provide all prospective program participants and contractors with a copy of its complaint procedure.

✔ The applicant will upon receiving a Fair Housing complaint from a program participant, prospective program participant, or contractor, the applicant will immediately take all of the following required steps:

- Record the complaint in the running log.
- Inform the claimant that he/she may go directly to the Michigan Department of Civil Rights or the local Fair Housing Center (as applicable).
- Forward a copy of the complaint to the HID Specialist at MSHDA.

✔ Applicants must conduct business from a barrier-free facility or make reasonable accommodations for persons with impaired mobility.

✔ Equal access to program benefits will be assured through written outreach strategies to assure fair selection of participating households.

Procurement of Contractors and Activity Implementation Acknowledgements.

✔ Equal access for all qualified prospective contractors is required and will be assured through written outreach methods/strategies to assure fair selection of participating contractors.

✔ A reasonable number of qualified contractors will be invited to bid on the project or appropriate parts of the project. The applicant will solicit bids from at least two qualified sources unless the difference between the two quotes exceeds 25% and then a third quote will be required. Selection of the most responsible bidder must be documented and all costs must be reasonable and necessary.

✔ All work performed throughout the program will be conducted under the direct supervision of a person or company which, at a minimum meets the program's contractor qualifications:

- Holds a valid Residential Builders License.
- Holds a valid license as required by law for any other skilled trades in which they are engaged (electrical, plumbing, etc.).
- Has in force insurance coverage (liability, workers' compensation, etc.) as required by law.
- Has appropriate lead-based paint training and/or certifications.

✔ All contracts exceeding $50,000 for improvements/activities undertaken on publicly-owned buildings require a performance and payment bond.

✔ The applicant can establish a process where all qualified contractors will be on a master list to be invited to bid a few at a time on a rotating basis either individually or via a multi-unit bid list.

✔ The applicant will secure a building permit for all work for which a permit is required.

Implementation and Capacity.

✔ Progress on the proposed program will meet the requirements for the commitment and expenditure of funds as outlined with in the grant agreement.

✔ The applicant acknowledges that funding may be reduced if expenditures fall behind the above targets.

Reporting Results.

✔ The applicant agrees to complete the Final Outcome Report and provide requested measurable data and the applicant understands that the report must be submitted prior to the submission of the final Financial Status Report.

_____ _____

Signature of Agency Official Date

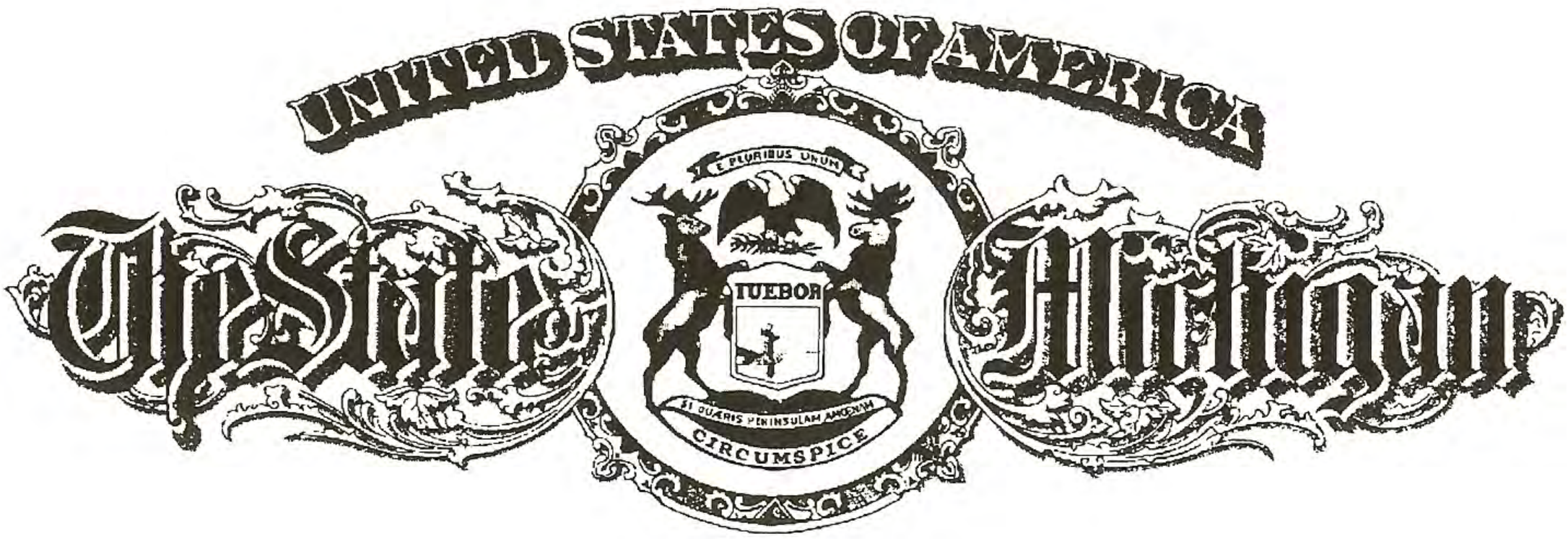

Department of Licensing and Regulatory Affairs

Lansing, Michigan

This is to Certify That

HOMESTRETCH NONPROFIT HOUSING CORPORATION

was validly incorporated on August 26, 1996, as a Michigan nonprofit corporation, and said corporation is validly in existence under the laws of this state.

This certificate is issued pursuant to the provisions of 1982 PA 162, as amended, to attest to the fact that the corporation is in good standing in Michigan as of this date and is duly authorized to conduct affairs in Michigan and for no other purpose.

This certificate is in due form, made by me as the proper officer, and is entitled to have full faith and credit given it in every court and office within the United States.

GOLD SEAL APPEARS ONLY ON ORIGINAL

In testimony whereof, I have hereunto set my hand, in the City of Lansing, this 19th day of October, 2012.

Director

Bureau of Commercial Services

INTERNAL REVENUE SERVICE
P. O. BOX 2508
CINCINNATI, OH 45201

DEPARTMENT OF THE TREASURY

Date: SEP 01 2000

HOMESTRETCH
806 HASTINGS
TRAVERSE CITY, MI 49686-3454

Employer Identification Number:
38-3337549
DLN:
300235004
Contact Person:
D. A. DOWNING ID# 31805
Contact Telephone Number:
(877) 829-5500
Our Letter Dated:
MARCH 1998
Advance Ruling Period Begins:
AUGUST 1996
Advance Ruling Period Ends:
SEPTEMBER 30, 2000
Addendum Applies:
NO

Dear Applicant:

Our letter of the above date stated that we had determined your organization is exempt under section 501(a) of the Internal Revenue Code as an organization described in section 501(c)(3) and that you would be treated as a publicly supported organization and not as a private foundation during your advance ruling period. This was based on our determination that you could reasonably be expected to be an organization described in sections 170(b)(1)(A)(vi) and 509(a)(1) or in section 509(a)(2).

We also stated that at the end of your advance ruling period you would have to establish that you were in fact an organization described in one of the above sections.

Our records indicate that your advance ruling period begins and ends on the dates shown above. Your exempt status as an organization described in section 501(c)(3) is still in effect. However, to establish that you are a publicly supported organization described in sections 170(b)(1)(A)(vi) and 509(a)(1) or in section 509(a)(2), please complete the attached Form 8734, Support Schedule for Advance Ruling Period, for each of the tax years in your advance ruling period.

The information requested in this letter is required to support your claim to be other than a private foundation. It is needed in addition to any required Form 990 or other annual return. Please send it to us within 90 days from the end of your advance ruling period.

If we do not receive this information, we will presume you are a private foundation and you will be treated as a private foundation as of the first day of your first tax year for purposes of sections 507(d) and 4940 of the Code. In addition, if you do not provide the information by the time requested, it will be considered by the Internal Revenue Service that you have not taken all reasonable steps to secure the determination you requested. Under section

9. Low/Mod Eligibility

There are a total of 8 Condominiums in the Neighborhood. 7 qualify as Low/Mod Income eligible Households. The current NEP request is for $49,500 which equates to $7,071.43 per household.

We used Income Limits as published on the MSHDA website dated as of 04/01/2021 for Leelanau County.

Below is a list of the actual AMI determination of all 7 households:

West Units:

1. Madelon Lee: 1-person household below 30% AMI
2. Kimi Bouquette: 3-person household below 70% AMI
3. Catherine Fenlon: 1-person household below 35% AMI
4. Tracy Smede-Hepler: 3-person household below 60% AMI

East Units:

5. Evelyn Kellogg: 2-person household below 100% AMI
6. Kaleb Grant: 1-person household below 70% AMI
7. Tim Waters: 5-person household below 55% AMI

The Self Certification Forms are attached below.

04/01/2021 INCOME AND RENT LIMITS

County: 45 Leelanau **Effective Date: 4/1/2021**

Income	1 Person	2 Person	3 Person	4 Person	5 Person	6 Person	7 Person	8 Person
20%	11,060	12,640	14,220	15,780	17,060	18,320	19,580	20,840
25%	13,825	15,800	17,775	19,725	21,325	22,900	24,475	26,050
30%	16,590	18,960	21,330	23,670	25,590	27,480	29,370	31,260
35%	19,355	22,120	24,885	27,615	29,855	32,060	34,265	36,470
40%	22,120	25,280	28,440	31,560	34,120	36,640	39,160	41,680
45%	24,885	28,440	31,995	35,505	38,385	41,220	44,055	46,890
50%	27,650	31,600	35,550	39,450	42,650	45,800	48,950	52,100
55%	30,415	34,760	39,105	43,395	46,915	50,380	53,845	57,310
60%	33,180	37,920	42,660	47,340	51,180	54,960	58,740	62,520
70%	38,710	44,240	49,770	55,230	59,710	64,120	68,530	72,940
80%	44,240	50,560	56,880	63,120	68,240	73,280	78,320	83,360
100%	55,300	63,200	71,100	78,900	85,300	91,600	97,900	104,200
120%	66,360	75,840	85,320	94,680	102,360	109,920	117,480	125,040
125%	69,125	79,000	88,875	98,625	106,625	114,500	122,375	130,250
140%	77,420	88,480	99,540	110,460	119,420	128,240	137,060	145,880
150%	82,950	94,800	106,650	118,350	127,950	137,400	146,850	156,300

Rent By Person	1 Person	2 Person	3 Person	4 Person	5 Person	6 Person	7 Person	8 Person
20%	276	316	355	394	426	458	489	521
25%	345	395	444	493	533	572	611	651
30%	414	474	533	591	639	687	734	781
35%	483	553	622	690	746	801	856	911
40%	553	632	711	789	853	916	979	1,042
45%	622	711	799	887	959	1,030	1,101	1,172
50%	691	790	888	986	1,066	1,145	1,223	1,302
55%	760	869	977	1,084	1,172	1,259	1,346	1,432
60%	829	948	1,066	1,183	1,279	1,374	1,468	1,563
80%	1,106	1,264	1,422	1,578	1,706	1,832	1,958	2,084
100%	1,382	1,580	1,777	1,972	2,132	2,290	2,447	2,605
120%	1,659	1,896	2,133	2,367	2,559	2,748	2,937	3,126
125%	1,728	1,975	2,221	2,465	2,665	2,862	3,059	3,256
140%	1,935	2,212	2,488	2,761	2,985	3,206	3,426	3,647
150%	2,073	2,370	2,666	2,958	3,198	3,435	3,671	3,907

Rent By Bedroom	0 Bedroom	1 Bedroom	2 Bedroom	3 Bedroom	4 Bedroom	5 Bedroom
20%	276	296	355	410	458	505
25%	345	370	444	513	572	631
30%	414	444	533	615	687	757
35%	483	518	622	718	801	884
40%	553	592	711	821	916	1,010
45%	622	666	799	923	1,030	1,136
50%	691	740	888	1,026	1,145	1,263
55%	760	814	977	1,128	1,259	1,389
60%	829	888	1,066	1,231	1,374	1,515
70%	967	1,036	1,244	1,436	1,603	1,768
80%	1,106	1,185	1,422	1,642	1,832	2,021
100%	1,382	1,481	1,777	2,052	2,290	2,526
120%	1,659	1,777	2,133	2,463	2,748	3,031
125%	1,728	1,851	2,221	2,565	2,862	3,157
140%	1,935	2,073	2,488	2,873	3,206	3,536
150%	2,073	2,221	2,666	3,078	3,435	3,789

Neighborhood Enhancement Program (NEP)
Tenant Household Income
Self-Certification Form

Tenant Name Madelon Lee

Tenant Address 538 E. St Joseph St.

Project Description

NEP Tenant Qualifications Checklist

- [x] The tenant **occupies** the **assisted** property.
- [ ] The tenant does **not** own the property.
- [ ] The tenant has a signed lease agreement with the landlord.
- [x] There is **current insurance** coverage on the property, through landlord and tenant renter's insurance.
- [x] The applicant has a household income at or below 120% of the LEELANAU CNTY. median income (located below).

2021	County (For Information Only – Do Not Mark)							
Household Size	1	2	3	4	5	6	7	8
Income Limits 120% AMI	60,300							

BY MY SIGNATURE BELOW, I CERTIFY THAT MY INDIVIDUAL INCOME OR HOUSEHOLD INCOME IS APPROXIMATELY $14,736 ANNUALLY AND 1 NUMBER OF PERSONS RESIDE IN MY HOME. I FURTHER CERTIFY THAT I AM ABLE TO DOCUMENT MY ANNUAL INCOME WITH PAYSTUBS, OR OTHER EVIDENCE.

I CERTIFY ALL THE INFORMATION ON THIS APPLICATION AND ALL INFORMATION PROVIDED IN SUPPORT OF THIS APPLICATION ARE TRUE AND COMPLETE TO THE BEST OF MY BELIEF AND KNOWLEDGE. I UNDERSTAND THAT THE GRANTEE WILL REVIEW THIS REQUEST AND DETERMINE IF IT IS IN COMPLIANCE WITH THE PROGRAMS POLICIES, HID REGULATIONS AND PRIORITIES, AND THE NEIGHBORHOOD ENHANCEMENT PROGRAM. IF THIS APPLICATION IS APPROVED, I WILL CARE FOR AND MAINTAIN THE PROPERTY.

SIGNATURE OF APPLICANT: Madelon Lee **DATE:** 12/4/21

AUTHORIZATION TO RELEASE INFORMATION

To Michigan State Housing Development Authority and Housing Agency (HA):

I/we, the individual/household member(s) below is/are a current tenant of the residence located at 538 S. ST. JOSEPH ST., LAKE LEELANAU Michigan and is/are an applicant or participant in the NEP Housing Initiative program. This program is funded by the Michigan State Housing (MSHDA) and administered by _____ Housing Agency (HA). In order to be eligible for this Housing Initiative program, my household's income is collected along with other information in my/our program file including my/our address, household size, household member names and photographs. MSHDA and the HA are requesting consent to release this file information for marketing and program purposes. However, the information will not be otherwise disclosed or released outside of MSHDA or the HA, except as permitted or required by law. MSHDA and the HA will protect the file information in accordance with any applicable State privacy law.

Signatures:	Date:
Madelon Lee Head of Household	12/4/21
Spouse	
Other Family Member/Occupant over age 18	
Other Family Member/Occupant over age 18	
Other Family Member/Occupant over age 18	
Other Family Member/Occupant over age 18	

Neighborhood Enhancement Program (NEP)
Tenant Household Income
Self-Certification Form

Tenant Name_____

Tenant Address_____

Project Description_____

NEP Tenant Qualifications Checklist

- ☐ The tenant **occupies** the **assisted** property.
- ☐ The tenant does **not** own the property.
- ☐ The tenant has a signed lease agreement with the landlord.
- ☐ There is **current insurance** coverage on the property, through landlord and tenant renter's insurance.
- ☐ The applicant has a household income at or below 120% of the _____ median income (located below).

2021	County (For Information Only – Do Not Mark)							
Household Size	1	2	3	4	5	6	7	8
Income Limits 120% AMI								

BY MY SIGNATURE BELOW, I CERTIFY THAT MY INDIVIDUAL INCOME OR HOUSEHOLD INCOME IS APPROXIMATELY $_____ ANNUALLY AND_____NUMBER OF PERSONS RESIDE IN MY HOME. I FURTHER CERTIFY THAT I AM ABLE TO DOCUMENT MY ANNUAL INCOME WITH PAYSTUBS, OR OTHER EVIDENCE.

I CERTIFY ALL THE INFORMATION ON THIS APPLICATION AND ALL INFORMATION PROVIDED IN SUPPORT OF THIS APPLICATION ARE TRUE AND COMPLETE TO THE BEST OF MY BELIEF AND KNOWLEDGE. I UNDERSTAND THAT THE GRANTEE WILL REVIEW THIS REQUEST AND DETERMINE IF IT IS IN COMPLIANCE WITH THE PROGRAMS POLICIES, HID REGULATIONS AND PRIORITIES, AND THE NEIGHBORHOOD ENHANCEMENT PROGRAM. IF THIS APPLICATION IS APPROVED, I WILL CARE FOR AND MAINTAIN THE PROPERTY.

SIGNATURE OF APPLICANT:_____ **DATE:** 1/28/21

AUTHORIZATION TO RELEASE INFORMATION

To Michigan State Housing Development Authority and Housing Agency (HA):

I/we, the individual/household member(s) below is/are a current tenant of the residence located at _____, _____ Michigan and is/are an applicant or participant in the _____ Housing Initiative program. This program is funded by the Michigan State Housing (MSHDA) and administered by _____ Housing Agency (HA). In order to be eligible for this Housing Initiative program, my household's income is collected along with other information in my/our program file including my/our address, household size, household member names and photographs. MSHDA and the HA are requesting consent to release this file information for marketing and program purposes. However, the information will not be otherwise disclosed or released outside of MSHDA or the HA, except as permitted or required by law. MSHDA and the HA will protect the file information in accordance with any applicable State privacy law.

Signatures: Date:

Kim Bogenette 10/8/21

_____ _____
Head of Household

_____ _____
Spouse

_____ _____
Other Family Member/Occupant over age 18

_____ _____
Other Family Member/Occupant over age 18

_____ _____
Other Family Member/Occupant over age 18

_____ _____
Other Family Member/Occupant over age 18

Neighborhood Enhancement Program (NEP)
Tenant Household Income
Self-Certification Form

Tenant Name Catherine Fenlon

Tenant Address 534 S. St. Joseph St Lake Leelanau, MI

Project Description

NEP Tenant Qualifications Checklist

- [x] The tenant **occupies** the **assisted** property.
- [ ] The tenant does **not** own the property.
- [ ] The tenant has a signed lease agreement with the landlord.
- [x] There is **current insurance** coverage on the property, through landlord and tenant renter's insurance.
- [x] The applicant has a household income at or below 120% of the ~~Co.~~ LEELANAU COUNTY median income (located below).

2021	County (For Information Only – Do Not Mark)							
Household Size	1	2	3	4	5	6	7	8
Income Limits 120% AMI	66,380							

BY MY SIGNATURE BELOW, I CERTIFY THAT MY INDIVIDUAL INCOME OR HOUSEHOLD INCOME IS APPROXIMATELY $ 17,894 **ANNUALLY AND** 1 **NUMBER OF PERSONS RESIDE IN MY HOME. I FURTHER CERTIFY THAT I AM ABLE TO DOCUMENT MY ANNUAL INCOME WITH PAYSTUBS, OR OTHER EVIDENCE.**

I CERTIFY ALL THE INFORMATION ON THIS APPLICATION AND ALL INFORMATION PROVIDED IN SUPPORT OF THIS APPLICATION ARE TRUE AND COMPLETE TO THE BEST OF MY BELIEF AND KNOWLEDGE. I UNDERSTAND THAT THE GRANTEE WILL REVIEW THIS REQUEST AND DETERMINE IF IT IS IN COMPLIANCE WITH THE PROGRAMS POLICIES, HID REGULATIONS AND PRIORITIES, AND THE NEIGHBORHOOD ENHANCEMENT PROGRAM. IF THIS APPLICATION IS APPROVED, I WILL CARE FOR AND MAINTAIN THE PROPERTY.

SIGNATURE OF APPLICANT: [signature] **DATE:** 12/7/21

AUTHORIZATION TO RELEASE INFORMATION

To Michigan State Housing Development Authority and Housing Agency (HA):

I/we, the individual/household member(s) below is/are a current tenant of the residence located at 534 S. ST. JOSEPH ST. Lansing Michigan and is/are an applicant or participant in the NEP Housing Initiative program. This program is funded by the Michigan State Housing (MSHDA) and administered by _____ Housing Agency (HA). In order to be eligible for this Housing Initiative program, my household's income is collected along with other information in my/our program file including my/our address, household size, household member names and photographs. MSHDA and the HA are requesting consent to release this file information for marketing and program purposes. However, the information will not be otherwise disclosed or released outside of MSHDA or the HA, except as permitted or required by law. MSHDA and the HA will protect the file information in accordance with any applicable State privacy law.

Signatures:	Date:
[signature]	12/7/21
Head of Household	
N/A	
Spouse	
Other Family Member/Occupant over age 18	
Other Family Member/Occupant over age 18	
Other Family Member/Occupant over age 18	
Other Family Member/Occupant over age 18	

Neighborhood Enhancement Program (NEP)
Tenant Household Income
Self-Certification Form

Tenant Name Tracy Smedes-Hepler

Tenant Address 432 S Saint Joseph Street

Project Description Home repairs

NEP Tenant Qualifications Checklist

- ☒ The tenant **occupies** the **assisted** property.
- ☐ The tenant does **not** own the property.
- ☐ The tenant has a signed lease agreement with the landlord.
- ☐ There is **current insurance** coverage on the property, through landlord and tenant renter's insurance.
- ☐ The applicant has a household income at or below 120% of the median income (located below).

2021	County (For Information Only – Do Not Mark)							
Household Size	1	2	3	4	5	6	7	8
Income Limits 120% AMI								

BY MY SIGNATURE BELOW, I CERTIFY THAT MY INDIVIDUAL INCOME OR HOUSEHOLD INCOME IS APPROXIMATELY $ $40,000 ANNUALLY AND 3 NUMBER OF PERSONS RESIDE IN MY HOME. I FURTHER CERTIFY THAT I AM ABLE TO DOCUMENT MY ANNUAL INCOME WITH PAYSTUBS, OR OTHER EVIDENCE.

I CERTIFY ALL THE INFORMATION ON THIS APPLICATION AND ALL INFORMATION PROVIDED IN SUPPORT OF THIS APPLICATION ARE TRUE AND COMPLETE TO THE BEST OF MY BELIEF AND KNOWLEDGE. I UNDERSTAND THAT THE GRANTEE WILL REVIEW THIS REQUEST AND DETERMINE IF IT IS IN COMPLIANCE WITH THE PROGRAMS POLICIES, HID REGULATIONS AND PRIORITIES, AND THE NEIGHBORHOOD ENHANCEMENT PROGRAM. IF THIS APPLICATION IS APPROVED, I WILL CARE FOR AND MAINTAIN THE PROPERTY.

SIGNATURE OF APPLICANT: _____ **DATE:** 12/7/2021

AUTHORIZATION TO RELEASE INFORMATION

To Michigan State Housing Development Authority and Housing Agency (HA):

I/we, the individual/household member(s) below is/are a current tenant of the residence located at 532 Saint Joseph Street, Lake Leelanau, Michigan and is/are an applicant or participant in the _____ Housing Initiative program. This program is funded by the Michigan State Housing (MSHDA) and administered by _____ Housing Agency (HA). In order to be eligible for this Housing Initiative program, my household's income is collected along with other information in my/our program file including my/our address, household size, household member names and photographs. MSHDA and the HA are requesting consent to release this file information for marketing and program purposes. However, the information will not be otherwise disclosed or released outside of MSHDA or the HA, except as permitted or required by law. MSHDA and the HA will protect the file information in accordance with any applicable State privacy law.

Signatures:	Date:
_____ Head of Household	12/7/2021
_____ Spouse	12/7/2021
_____ Other Family Member/Occupant over age 18	_____
_____ Other Family Member/Occupant over age 18	_____
_____ Other Family Member/Occupant over age 18	_____
_____ Other Family Member/Occupant over age 18	_____

Neighborhood Enhancement Program (NEP)
Tenant Household Income
Self-Certification Form

Tenant Name_____

Tenant Address_____

Project Description_____

NEP Tenant Qualifications Checklist

☐ The tenant **occupies** the **assisted** property.

☐ The tenant does **not** own the property.

☐ The tenant has a signed lease agreement with the landlord.

☐ There is **current insurance** coverage on the property, through landlord and tenant renter's insurance.

☐ The applicant has a household income at or below 120% of the _____ median income (located below).

2021	County (For Information Only – Do Not Mark)							
Household Size	1	2	3	4	5	6	7	8
Income Limits 120% AMI								

BY MY SIGNATURE BELOW, I CERTIFY THAT MY INDIVIDUAL INCOME OR HOUSEHOLD INCOME IS APPROXIMATELY $_____ ANNUALLY AND_____NUMBER OF PERSONS RESIDE IN MY HOME. I FURTHER CERTIFY THAT I AM ABLE TO DOCUMENT MY ANNUAL INCOME WITH PAYSTUBS, OR OTHER EVIDENCE.

I CERTIFY ALL THE INFORMATION ON THIS APPLICATION AND ALL INFORMATION PROVIDED IN SUPPORT OF THIS APPLICATION ARE TRUE AND COMPLETE TO THE BEST OF MY BELIEF AND KNOWLEDGE. I UNDERSTAND THAT THE GRANTEE WILL REVIEW THIS REQUEST AND DETERMINE IF IT IS IN COMPLIANCE WITH THE PROGRAMS POLICIES, HID REGULATIONS AND PRIORITIES, AND THE NEIGHBORHOOD ENHANCEMENT PROGRAM. IF THIS APPLICATION IS APPROVED, I WILL CARE FOR AND MAINTAIN THE PROPERTY.

SIGNATURE OF APPLICANT:_____**DATE:** _____

AUTHORIZATION TO RELEASE INFORMATION

To Michigan State Housing Development Authority and Housing Agency (HA):

I/we, the individual/household member(s) below is/are a current tenant of the residence located at _____, _____ Michigan and is/are an applicant or participant in the _MSHDA_____ Housing Initiative program. This program is funded by the Michigan State Housing (MSHDA) and administered by _Homestretch_____ Housing Agency (HA). In order to be eligible for this Housing Initiative program, my household's income is collected along with other information in my/our program file including my/our address, household size, household member names and photographs. MSHDA and the HA are requesting consent to release this file information for marketing and program purposes. However, the information will not be otherwise disclosed or released outside of MSHDA or the HA, except as permitted or required by law. MSHDA and the HA will protect the file information in accordance with any applicable State privacy law.

Signatures: Date:

_____ _____
Head of Household

_____ _____
Spouse

_____ _____
Other Family Member/Occupant over age 18

_____ _____
Other Family Member/Occupant over age 18

_____ _____
Other Family Member/Occupant over age 18

_____ _____
Other Family Member/Occupant over age 18

Neighborhood Enhancement Program (NEP)
Tenant Household Income
Self-Certification Form

Tenant Name Kaleb Grant

Tenant Address 547 S. Saint Joseph St, Lake Leelanau MI 49653

Project Description fogged windows

NEP Tenant Qualifications Checklist

- ☑ The tenant **occupies** the **assisted** property.
- ☐ The tenant does **not** own the property.
- ☐ The tenant has a signed lease agreement with the landlord.
- ☐ There is **current insurance** coverage on the property, through landlord and tenant renter's insurance.
- ☐ The applicant has a household income at or below 120% of the median income (located below).

2021 **County**
(For Information Only – Do Not Mark)

Household Size	1	2	3	4	5	6	7	8
Income Limits 120% AMI								

BY MY SIGNATURE BELOW, I CERTIFY THAT MY INDIVIDUAL INCOME OR HOUSEHOLD INCOME IS APPROXIMATELY $35,000 ANNUALLY AND 1 NUMBER OF PERSONS RESIDE IN MY HOME. I FURTHER CERTIFY THAT I AM ABLE TO DOCUMENT MY ANNUAL INCOME WITH PAYSTUBS, OR OTHER EVIDENCE.

I CERTIFY ALL THE INFORMATION ON THIS APPLICATION AND ALL INFORMATION PROVIDED IN SUPPORT OF THIS APPLICATION ARE TRUE AND COMPLETE TO THE BEST OF MY BELIEF AND KNOWLEDGE. I UNDERSTAND THAT THE GRANTEE WILL REVIEW THIS REQUEST AND DETERMINE IF IT IS IN COMPLIANCE WITH THE PROGRAMS POLICIES, HID REGULATIONS AND PRIORITIES, AND THE NEIGHBORHOOD ENHANCEMENT PROGRAM. IF THIS APPLICATION IS APPROVED, I WILL CARE FOR AND MAINTAIN THE PROPERTY.

SIGNATURE OF APPLICANT: Kaleb Grant **DATE:** 12/5/2021

AUTHORIZATION TO RELEASE INFORMATION

To Michigan State Housing Development Authority and Housing Agency (HA):

I/we, the individual/household member(s) below is/are a current tenant of the residence located at 547 S Saint Joseph St Lake Leelanau Michigan and is/are an applicant or participant in the _____ Housing Initiative program. This program is funded by the Michigan State Housing (MSHDA) and administered by _____ Housing Agency (HA). In order to be eligible for this Housing Initiative program, my household's income is collected along with other information in my/our program file including my/our address, household size, household member names and photographs. MSHDA and the HA are requesting consent to release this file information for marketing and program purposes. However, the information will not be otherwise disclosed or released outside of MSHDA or the HA, except as permitted or required by law. MSHDA and the HA will protect the file information in accordance with any applicable State privacy law.

Signatures:	Date:
Kaleb Grant Head of Household	12/5/2021
Spouse	
Other Family Member/Occupant over age 18	
Other Family Member/Occupant over age 18	
Other Family Member/Occupant over age 18	
Other Family Member/Occupant over age 18	

Neighborhood Enhancement Program (NEP)
Tenant Household Income
Self-Certification Form

Tenant Name Jim Waters

Tenant Address 545 South saint Joseph street
lakeLeelanau, mi 49653

Project Description
Home repairs (windows, Deck)

NEP Tenant Qualifications Checklist

- [x] The tenant **occupies** the **assisted** property.
- [ ] The tenant does **not** own the property.
- [ ] The tenant has a signed lease agreement with the landlord.
- [ ] There is **current insurance** coverage on the property, through landlord and tenant renter's insurance.
- [x] The applicant has a household income at or below 120% of the LEELANAU CTY. median income (located below).

2021

	County (For Information Only – Do Not Mark)							
Household Size	1	2	3	4	5	6	7	8
Income Limits 120% AMI	102,360							

BY MY SIGNATURE BELOW, I CERTIFY THAT MY INDIVIDUAL INCOME OR HOUSEHOLD INCOME IS APPROXIMATELY $49,929 ANNUALLY AND 5 NUMBER OF PERSONS RESIDE IN MY HOME. I FURTHER CERTIFY THAT I AM ABLE TO DOCUMENT MY ANNUAL INCOME WITH PAYSTUBS, OR OTHER EVIDENCE.

yearly

I CERTIFY ALL THE INFORMATION ON THIS APPLICATION AND ALL INFORMATION PROVIDED IN SUPPORT OF THIS APPLICATION ARE TRUE AND COMPLETE TO THE BEST OF MY BELIEF AND KNOWLEDGE. I UNDERSTAND THAT THE GRANTEE WILL REVIEW THIS REQUEST AND DETERMINE IF IT IS IN COMPLIANCE WITH THE PROGRAMS POLICIES, HID REGULATIONS AND PRIORITIES, AND THE NEIGHBORHOOD ENHANCEMENT PROGRAM. IF THIS APPLICATION IS APPROVED, I WILL CARE FOR AND MAINTAIN THE PROPERTY.

SIGNATURE OF APPLICANT: Jim Waters **DATE:** 12/6/21

AUTHORIZATION TO RELEASE INFORMATION

To Michigan State Housing Development Authority and Housing Agency (HA):

I/we, the individual/household member(s) below is/are a current tenant of the residence located at 545 S. ST. JOSEPH ST, LAKE LEELANAU Michigan and is/are an applicant or participant in the NEP Housing Initiative program. This program is funded by the Michigan State Housing (MSHDA) and administered by _____ Housing Agency (HA). In order to be eligible for this Housing Initiative program, my household's income is collected along with other information in my/our program file including my/our address, household size, household member names and photographs. MSHDA and the HA are requesting consent to release this file information for marketing and program purposes. However, the information will not be otherwise disclosed or released outside of MSHDA or the HA, except as permitted or required by law. MSHDA and the HA will protect the file information in accordance with any applicable State privacy law.

Signatures:	Date:
Head of Household	12/6/21
Spouse	12/6/21
Other Family Member/Occupant over age 18	
Other Family Member/Occupant over age 18	
Other Family Member/Occupant over age 18	
Other Family Member/Occupant over age 18	

10. Supplemental Information

The following is a detailed Estimate of the activities to be performed with NEP funds. Good Harbor Builders, Inc. is a licensed and insured General Contractor affiliated with Homestretch. Several site visits were made to document the scope of work and homeowners were engaged during this process.

GOOD HARBOR BUILDERS, Inc.

Estimate

201 East Oak Street
PO Box 362
Leland MI 49654-0362

Date	Estimate #
8/30/2021	2018-21

Name / Address
Provemont Pines HOA West duplex Units East duplex Units Lake Leelanau, Michigan 49653

Project
Homestretch NPHC

Item	Description
Flatwork	Units 532,534 and 536,538 rear patio: Lift 2-90 square feet concrete patios using morter based mixture pumping system
Carpentry	Units 532 and 534: Labor and material. Replace 4x4x6' and 6x6x10' treated posts. Add 1/4" Steel plate and fasteners to secure beam junction.
Carpentry	Unit 534: Labor and Material. Replace approximately 72 lineal feet of treated deck boards.
siding	Unit 534: Labor and material. Replace lower casing and siding and ad new J trim. Inspect flashing at window and above sliding door and address flashing.
Carpentry	Unit 538: Labor and material. Replace approximately 168 lineal feet of treated deck boards.
Carpentry	Units 532,534 and 536, 538: Labor and material to remove 3/4" plywood under decking and replace with approved under deck gutter system. Add blocking between joist span.
Carpentry	Unit 543: Labor and material Remove and replace 16 l.f. traeted deck boards. Temporary support of stair stringer and replace concrete foundation, replace lower riser and treads and fasten stinger to foundation. Install angle supports to all treads
Carpentry	Unit 545: Labor and material Remove and replace 20 l.f. traeted deck boards. Re-support stair stringer and replace 4 treads. Install angle supports to all treads
	Total

GOOD HARBOR BUILDERS, Inc.

201 East Oak Street
PO Box 362
Leland MI 49654-0362

Estimate

Date	Estimate #
8/30/2021	2018-21

Name / Address
Provemont Pines HOA West duplex Units East duplex Units Lake Leelanau, Michigan 49653

Project
Homestretch NPHC

Item	Description
windows	Units 543, 545 and 547: Northern Michigan Glass; Remove and replace 41 insulated glass winow units.
Carpentry	Units 543, 545, 547: Labor and Material to Remove and Replace treated deck boards, replace stair treads and install angle supports to all treads
asphalt paving	Common Area Driveway: Elmer's Asphalt Allowance to repair pot holes, large cracks and seal approximately 370 feet x 12 feet of pavement
Waste Fees	American Waste: 10 yard dumpster
	total of all previous line items
General Fee	Profit & Overhead

Total	$45,030.00

11. Supplemental Information

After Leelanau County Developed the homes in 2008, the project was placed under the direction of Leelanau REACH, which is now in the final stages of being absorbed by Homestretch. Prior to Homestretch taking over the management in July 2020, the HOA was self-managed by the residents. Upon investigation, the monthly dues were insufficient to fund the reserve account and pay for a management agency. The annual meetings were not conducted properly but the owners were able to keep up with the common area maintenance. The Bylaws state the Developer may assign permanent voting rights to Homestretch or Leelanau REACH. Homestretch was formally assigned by the Developer in 2020.

At the 1st annual meeting conducted by Homestretch, the dues were increased to $130 per month and will be further increased in the Spring of 2022 to $150 per month. These incremental changes are done delicately as the homeowners have low, to moderately low income. The Profit and Loss attached in this section shows a Net Income of -$479.72 which will not occur after the Spring 2022 increase. The reserve account will also continue to grow after this time.

The following is a financial reporting of the Provemont Pines Homeowner's Association and pages taken from the HOA Bylaws.

Provemont Pines Condominium Association
Profit & Loss
January through December 2021

	Jan - Dec 21
Ordinary Income/Expense	
Income	
12000 · Association Dues	12,480.00
Total Income	12,480.00
Expense	
63200 · Bank Service Charge	36.00
63300 · Insurance Expense	2,998.74
63700 · Landscaping and Groundskeeping	2,743.00
63800 · Snow Removal	1,100.00
64900 · Office Supplies	31.69
66550 · Filing Fees	20.00
66800 · Property Management Fees	874.00
67200 · Repairs and Maintenance	4,110.00
67300 · Waste Removal	496.80
68600 · Utilities	650.21
Total Expense	13,060.44
Net Ordinary Income	-580.44
Other Income/Expense	
Other Income	
70000 · Interest Income	0.72
71000 · Other Income	100.00
Total Other Income	100.72
Net Other Income	100.72
Net Income	**-479.72**

2:42 PM
12/07/21
Accrual Basis

Provemont Pines Condominium Association
Balance Sheet
As of December 7, 2021

	Dec 7, 21
ASSETS	
Current Assets	
Checking/Savings	
18254 · TCF Checking	4,995.90
18262 · TCF Reserves	7,010.16
Total Checking/Savings	12,006.06
Accounts Receivable	
11000 · Accounts Receivable	1,569.00
Total Accounts Receivable	1,569.00
Total Current Assets	13,575.06
TOTAL ASSETS	**13,575.06**
LIABILITIES & EQUITY	
Equity	
30000 · Opening Balance Equity	11,488.58
32000 · Retained Earnings	2,566.20
Net Income	-479.72
Total Equity	13,575.06
TOTAL LIABILITIES & EQUITY	**13,575.06**

EXHIBIT A TO MASTER DEED

CONDOMINIUM BYLAWS
PROVEMONT PINES

ARTICLES

1. ASSOCIATION OF CO-OWNERS

1.1. **Organization**. Provemont Pines Condominium Association, Inc. ("Provemont Pines") shall be administered by an Association of Co-Owners which is a non-profit corporation, hereinafter called the "Association" organized under the laws of the State of Michigan on November 14, 2006, as DLEG No. 70093K.

1.2. **Purpose**. The Association shall be organized to manage, maintain, and operate the Condominium in accordance with the Master Deed, these Bylaws, the Articles of Incorporation and Bylaws of the Association and the laws of the State of Michigan. The Association may provide for independent management of the Condominium Project.

1.3. **Membership**. Membership in the Association and voting by the members of the Association shall be in accordance with the following provisions:

1.3.1. Each Co-Owner shall be a member of the Association, and no other person or entity shall be entitled to membership.

1.3.2. The share of a Co-Owner in the funds and assets of the Association cannot be assigned, pledged or transferred in any manner except as an appurtenance to his unit in the Condominium.

1.3.3. Except as specifically provided in these Bylaws, each Co-Owner shall be entitled to one vote for each Condominium unit owned when voting by number and one vote, the value of which shall equal the total of the percentage allocated to the units owned by such Co-Owner as set forth in the Master Deed, when voting by value. Voting shall be by number unless a majority of the percentages of value elects to vote on a given matter by percentage of value, in which case voting on that matter shall be by percentage of value.

1.3.4. No Co-Owner, other than the Developer, shall be entitled to vote at any meeting of the Association until he has presented evidence of ownership of a unit in the Condominium Project to the Association. No Co-Owner, other than the Developer, shall be entitled to vote prior to the First Annual Meeting of Members held in accordance with Section 1.8 hereof. The vote of each Co-Owner may only be cast by the individual representative designated by such Co-Owner in the notice required in Section 1.3.5 below or by a proxy given by such individual representative. The Developer shall be entitled to vote each unit which it owns and with respect to which it is paying full annual assessments. Notwithstanding anything herein to the contrary, a purchaser of a unit by means of a land contract shall be designated the Owner of that unit and entitled to the sole vote for that unit.

1.3.5. The Developer shall have permanent voting rights in the Association, even after the Developer has sold all Units in the Project. These voting rights provide the Developer the right, but not the obligation, to cast **nine** votes, if voting is by Unit, and 51% of the percentage of value, if voting is by percentage, for any matter to be decided by the Association which touches or concerns, arises out of, or relates to, the continued compliance with, and qualification of the Condominium or any Unit under, the Decent Affordable Housing Restriction and any related requirements set forth in the Master Deed or other Condominium Documents, all as determined in the sole discretion of the Developer. The Developer may exercise any and all rights reasonably necessary to take advantage of these voting rights, and may assign these permanent voting rights to Homestretch, Inc., Leelanau REACH, or their successors or assigns. In the event the Developer does not elect to exercise these voting rights, neither the Developer nor it votes shall included in determining quorum requirements.

1.3.6. Each Co-Owner shall file a written notice with the Association, designating the name of the individual representative who shall vote at meetings of the Association and receive all notices and other communications from the Association on behalf of such Co-Owner. Such notice shall state the name and address of each person, firm, corporation, partnership, association, trust or other entity who is the Co-Owner. Such notice shall be signed and dated by the Co-Owner. The individual representative designated may be changed by the Co-Owner at any time by filing a new notice in the manner herein provided.

1.3.7. There shall be an annual meeting of the members of the Association commencing with the First Annual Meeting held as provided in Section 1.8 hereof. Other meetings may be called by a majority of the Co-Owners. Notice of the time, place and subject matter of all meetings shall be given to each Co-Owner by mailing the same to each individual representative designated by the respective Co-Owner at least ten (10) days prior to said meeting.

EXHIBIT C TO MASTER DEED

DECLARATION OF AFFORDABILITY RESTRICTIONS

WITH POWER OF ATTORNEY

This Declaration of Affordability Restrictions with Power of Attorney (hereinafter called the "***Declaration***") is made as of January 25, 2008, by Leelanau County, by and through its Department of Planning and Community Development (herein after called the "***Community Organization***").

The following is a recital of facts underlying this Declaration:

A. The Community Organization is organized for public welfare purposes, including developing and preserving decent, affordable housing for low and moderate income people, combating community deterioration and promoting neighborhood stability, and creating homeownership opportunities for low and moderate income people, who otherwise would be denied such opportunities because of limited financial resources.

B. The Community Organization owns certain residential property (hereinafter called the "***Property***") commonly known as **Provemont Pines, a condominium project in Leelanau County,** Michigan, including without limitation Units 1 through 8 of the project, all of which is more particularly described in the Master Deed to which this Declaration is attached and into which it is hereby incorporated, also referenced in Exhibit A hereto, also more commonly identified by the following addresses:

Unit 1 or A	532 S. St. Joseph Street
Unit 2 or B	534 S. St. Joseph Street
Unit 3 or C	536 S. St. Joseph Street
Unit 4 or D	538 S. St. Joseph Street
Unit 5 or E	541 S. St. Joseph Street
Unit 6 or F	543 S. St. Joseph Street
Unit 7 or G	545 S. St. Joseph Street
Unit 8 or H	547 S. St. Joseph Street

C. The conditions and restrictions set forth in this Declaration are essential to the fulfillment of the purposes of the Community Organization by (a) preserving the Community Organization subsidy; (b) limiting the inflationary effect of any appreciation in the value of the Property; and (c) restricting resale of the Property to other Income-Qualified Families, and shall be binding on all buyers and owners and subsequent owners of the Property (herein after called individually and collectively the "***Owner***").

D. As shall be set forth by reference to this Master Deed in the Community Organization's warranty deed conveying the Property to the initial Owner, binding as if set forth therein in full, **IF OWNER DOES NOT COMPLY WITH THE CONDITIONS AND RESTRICTIONS IN THIS DECLARATION, THEN THE COMMUNITY ORGANIZATION WILL HAVE A RIGHT TO REPURCHASE THE PROPERTY AT THE PURCHASE PRICE** designated in the Warranty Deed.

E. Each Owner shall acquire the Property subject to the special nature of the terms and conditions of the sale of the Property, including without limitation such terms and conditions as might affect the marketability or resale price of the Property.

NOW, THEREFORE, in consideration of the foregoing recitals, of the mutual promises of the parties, and of other good and valuable consideration, the receipt and sufficiency of which are hereby acknowledged, the parties agree as follows:

1. **BINDING ON ALL OWNERS. ANY PERSON WHO TAKES TITLE TO, OR POSSESSION OF, OR ANY INTEREST IN, ANY PORTION OF THE PROPERTY, SHALL BE DEEMED TO HAVE TAKEN SUCH INTERESTS SUBJECT TO THIS DECLARATION (SPECIFICALLY INCLUDING THE RESTRICTIONS ON RESALE) AND TO HAVE ACCEPTED AND AGREED TO BE BOUND BY THIS DECLARATION. THE COVENANTS AND RESTRICTIONS IN THIS DECLARATION SHALL BE DEEMED TO BE COVENANTS RUNNING WITH PROPERTY AND BINDING ON ALL SUCH PARTIES.**

   THIS DECLARATION IS HEREBY INCORPORATED INTO AND MADE A PART OF THE MASTER DEED FOR PROVEMONT PINES, A CONDOMINIUM PROJECT IN LEELANAU COUNTY, MICHIGAN.

2. Term. The term of this Declaration shall be 90 years, commencing on the date of recording the Master Deed to which this Declaration is attached, and ending 90 years thereafter.

3. Residential Use.

3.1 Residential Use Only. Owner shall use, and shall cause all occupants to use, the Property only for residential use as permitted by applicable zoning law.

3.2 Occupancy. Owner shall occupy the Property for at least nine (9) months of each calendar year unless otherwise agreed by the Community Organization. Occupancy by immediate family members or legal dependents of the Owner shall be deemed occupancy by the Owner. No more than one person other than immediate family members (children, parents and siblings) or legal dependents of the Owner may occupy the Property. Storage of personal property does not constitute occupancy.

4. Sale or Other Transfer of the Property.

4.1 Income-Qualified Persons. "***Income-Qualified Persons***" are persons whose household income does not exceed eighty per cent (80%) of the area median gross income, adjusted for household size. Household income shall be determined in a manner consistent with determinations of lower income households and area median gross income under Section 8 of the U.S. Housing Act of 1937, as amended (the "***Section 8 Program***"). If the Section 8 Program is terminated, determinations under a comparable Federal or State of Michigan program identified by the Community Organization shall be used; and if the Community Organization does not designate a comparable program, then determinations shall continue to be made under the Section 8 Program regulations as in effect immediately before termination.

4.2 Transfers to Income-Qualified Persons. Owner may sell, transfer, or otherwise dispose of its interest in the Property only to Income-Qualified Persons, as defined above, who acknowledge that they are bound by this Declaration. Any purported sale, transfer or other disposition to any other person or entity done without following the procedures set forth below or in violation of such price limitations (1) shall be voidable at the option of the Community Organization, and (2) shall constitute a default that gives rise to the Community Organization's option to purchase the Property for the price set forth in the Warranty Deed.

4.3 Transfer to Owner's Heirs. Upon receipt of notice from the personal representative of the decedent's estate given within ninety (90) days of the death of Owner (or last surviving Co-Owner), the Community Organization shall consent to a transfer of the Property, subject to the terms of this Declaration, to one or more of the following possible heirs of Owner:

(a) the spouse of Owner; or

(b) the child or children of Owner.

Any other person or persons who are heirs, legatees or devisees of Owner, within a period of ninety (90) days of the death of Owner (or last surviving Co-Owner), must prove to the Community Organization's satisfaction that they meet the definition of Income-Qualified Persons, and if any such person is unable to do so, then such person shall not be entitled to own the property.

4.4 Intent to Sell Notice. If Owner contemplates a sale, transfer or disposition of the Property, the Owner shall notify the Community Organization in writing of the proposed transfer substantially in the form of Exhibit B (the *"Intent to Sell Notice")*.

4.5 Appraisal. No later than ten (10) days after Community Organization's receipt of selling Owner's Intent to Sell Notice, Community Organization shall order at selling Owner's expense, an appraisal (the "***Appraisal***") of the Property by an independent, licensed appraiser. The Appraisal shall be by analysis and comparison of comparable properties disregarding the restrictions of this Declaration. Copies of the Appraisal are to be provided to both Community Organization and Owner.

4.6 Community Organization's Purchase Option. In order to further the purpose of preserving the affordability of the property for succeeding Income-Qualified Persons while taking fair account of the investment by the Owner, upon receipt of Intent to Sell Notice, the Community Organization shall have the option to purchase the Property (***"Purchase Option")*** at the Maximum Purchase Price (the "***MPP***" or "***Maximum***

Purchase Price") calculated as set forth in Section 4.9 below. The Community Organization may exercise its Purchase Option by notifying Owner, in writing ("Notice of Exercise") within 45 days of Community Organization's receipt of the Appraisal, or the Purchase Option shall expire. The Community Organization may assign its Purchase Option. Unless extended by mutual agreement of the Community Organization and Owner, the purchase must be completed within 90 days of the Notice of Exercise, or Owner may sell the Property as provided in Section 4.7 below.

4.7 Owner Sale to Income-Qualified Person. If Community Organization or its assignee does not exercise its Purchase Option or fails to complete the purchase, Owner may sell the Property, subject to this Declaration, to any Income-Qualified Person for not more than the Maximum Purchase Price.

4.8 Power of Attorney: If Community Organization or its assignee does not exercise its Purchase Option or fails to complete the purchase and Owner:

(a) Is not then residing in the Property; and

(b) Has made a continuous, *bona fide* effort to sell the Property for a period of one (1) year after the date of the Intent to Sell Notice, Owner hereby irrevocably appoints the Community Organization as Owner's attorney in fact, as of the date that is one year after the Intent to Sell Notice, to solicit a purchaser, negotiate a price furthering the goals of this Declaration, sell the Property, and distribute proceeds of sale, minus the Community Organization's costs of sale as follows:
   i. First to the Permitted Mortgagee(s);
   ii. Second, to Community Organization to the extent of any amounts owed by Owner;
   iii. Third, to the Owner in the amount of the Maximum Purchase Price less the amounts paid pursuant to Subparagraphs (i) and (ii) above; and,
   iv. Fourth, the balance to the Community Organization.

(c) This power of attorney creates an agency coupled with an interest and shall be automatically exercisable upon affirmation of the Community Organization without further evidence or independent verification of conditions precedent hereto.

4.9 Maximum Purchase Price. In no event may the Owner sell the Property for a price exceeding the Maximum Purchase Price. The Maximum Purchase Price shall be equal to the *lesser* of (1) the Current Appraised Value of the Property (as determined Appraisal conducted in accordance with Section 4.5 above) minus any Excessive Damage Charge (as determined below) or (2) the Formula Price described in Section 4.10.

An "Excessive Damage Charge" is a decrease in the appraised value of the Property equal to the cost required to remediate any excessive damage or neglect. Excessive damage or neglect is defined as damages beyond normal wear and tear. Such excessive damage may be described as, but not necessarily be limited to, holes in walls; large holes or tears in floor coverings; severely cracked, dented or scratched cabinets and fixtures; damaged, inoperable, or neglected capital systems (including but not limited to plumbing, heating and cooling, roofing, and other similar major structural components or necessary systems of the property); severely degenerated interior or exterior painted surfaces; damage resulting from neglected capital systems; or missing essential household fixtures that were originally a part of the edifice. Determination of excessive damage value will be at the sole discretion of the Community Organization and/or its agents. Owner may appeal Excessive Damage Charge determinations to the Community Organization's Board of Directors within seven (7) days of the assessment.

4.10 Formula Price. The Formula Price shall be calculated as follows:

(a) Owner's Purchase Price: The Owner and the Community Organization agree on the Owner's Purchase Price for the Property as of the commencement of this Declaration.

(b) Initial Appraised Value: The Owner and the Community Organization agree that, on the date Owner purchased the Property, its market valuation was conducted by analysis and comparison of comparable properties, disregarding the restrictions of this Declaration ("Initial Appraised Value").

(c) Current Appraised Value: The Owner and the Community Organization agree that the Current Appraised Value of the Property at the time of resale of the Property

shall be the market valuation determined by the Appraisal conducted in accordance with Section 4.5 above minus an Excessive Damage Charge (as defined in Section 4.9 above) if any.

(d) Calculation of Appreciation. For the purpose of this Section, Appreciation shall be determined by subtracting the Initial Appraised Value from the Current Appraised Value. If this calculation returns a positive number, the result shall be the "Appreciation." If this calculation returns a negative number, the Appreciation shall be zero ($0).

(e) Owner's Share of Appreciation. For the purpose of determining the Formula Price, the Owner's Share of the Appreciation shall be twenty-two percent (22%) of the Appreciation minus any Excessive Damage Charge (as determined in Section 4.9 (a) above).

(f) Calculation of Formula Price. The Formula Price is determined by adding Owner's Share of Appreciation to Owner's Purchase Price.

(g) Acknowledgement. Nothing in this Declaration represents or guarantees that the Property will be resold at an amount equal to the sale price limit defined above. Depending upon conditions affecting the real estate market, the Property may be resold for less than the sale price limit.

5. Membership and Fee to HomeStretch.

In consideration of the covenants contained herein and in partial consideration of the Community Organization's initial sale of the property to the Owner for a below-market price, the initial Owner and all subsequent Owners shall become regular voting members of HomeStretch Nonprofit Housing Corporation. In addition to and not in lieu of condominium Association dues and assessments, the Owner agrees to pay a one-time Community Land Trust management and administrative fee to HomeStretch Nonprofit Housing Corporation for the administration of the project by Homestretch. The fee shall be one thousand eight hundred dollars ($1,800.00), or such other amount as determined by Homestretch from time-to-time, and shall be payable to Homestretch at the time of the Owner's initial purchase of the Property as part of closing costs.

6. Financing.

(a) Owner may grant a security interest in the Property through a mortgage, deed of trust or other financing security document upon the Property only with the advance written consent of the Community Organization. This includes initial mortgages or deeds of trust to secure financing for the purchase of the unit. Not less than thirty (30) days prior to the date on which the Owner, or a prospective Owner who has contracted to purchase the Unit, requests the Community Organization's consent to a mortgage to be effective, Owner or prospective Owner shall furnish to the Community Organization copies of every document to be executed in connection with the transaction represented by such mortgage. The Community Organization may choose to consent to any mortgage, and in so doing shall designate such mortgage as a "Permitted Mortgage." However, the Community Organization is required to consent to a mortgage if (a) at the time of closing such mortgage, no default in this Declaration is then outstanding; and (b) the mortgage so submitted is a Standard Permitted Mortgage as defined in the attached Exhibit C, Permitted Mortgages. Owner shall pay to the Community Organization at the Community Organization's option, as additional Membership Fees, all fees, costs and expenses, including, without limitation, reasonable attorneys' fees, incurred by the Community Organization in connection with any Permitted Mortgage.

(b) Any holder of a Permitted Mortgage ("Permitted Mortgagee") shall without requirement of consent by the Community Organization have the rights identified and defined in the attached Exhibit C, Permitted Mortgages.

(c) In the event of foreclosure sale by a Permitted Mortgagee or the delivery of a deed to a Permitted Mortgagee in lieu of foreclosure in accordance with the provisions of this Declaration, the provisions of this Declaration shall thereupon be of no further force or effect as to only so much of the Security so foreclosed upon or transferred, provided that the provisions of paragraph (d) of this Section will remain operative for the time periods set forth therein and will then be of no further force or effect with respect to any future transfer of the Unit.

(d) In the event of foreclosure sale by a Permitted Mortgagee or the delivery of a deed to a Permitted Mortgagee in lieu of foreclosure in accordance with the provisions of this

Declaration, upon acquisition of title to the Property by the Permitted Mortgagee, the Community Organization shall have an option to purchase the Property from the Permitted Mortgagee for the full amount owing to the Permitted Mortgagee under the Permitted Mortgage; provided, however, that the Community Organization gives written notice to the Permitted Mortgagee of the Community Organization's intent to purchase the Property within thirty (30) days following the expiration of the redemption period of the foreclosed mortgage. The Community Organization shall complete the purchase of the Property within sixty (60) days of having given written notice of its intent to purchase. If the Community Organization does not complete the purchase, the Permitted Mortgagee shall be free to sell the Property to another person, including without limitation, a non-income eligible person or entity.

(e) The parties recognize that it would be contrary to the fundamental concept of this Declaration and an incentive to abuse Owner's authorization to encumber the Property with a Permitted Mortgage if Owner could realize more than the Maximum Purchase Price limits as the result of any foreclosure of any mortgage. Accordingly, Owner hereby irrevocably assigns to the Community Organization any and all net proceeds of sale of Owner's Property after payment of costs of foreclosure and satisfaction of the lien of any Permitted Mortgagee which would otherwise have been payable to Owner, to the extent such net proceeds exceed the net proceeds that Owner would have received had the property been sold for the Maximum Purchase Price established in Section 4 of this Declaration, and authorizes and instructs the Permitted Mortgagee or any party conducting any sale to pay said amounts directly to the Community Organization.

(f) Any amendments to this Declaration shall be subject to the written approval of Permitted Mortgagee(s), which approval shall not be unreasonably withheld or delayed.

7. Community Organization's Right to Acquire Owner's Interest.

(a) The Owner agrees that he or she will give immediate notice to the Community Organization upon the first to occur of: (i) the date when Owner becomes twenty-one (21) days late in making a payment on any indebtedness encumbering the Property required to avoid foreclosure, or (ii) the date any notice of delinquency is provided to the Owner.

(b) At any time within sixty (60) days after receipt of any such notice, or upon receipt of a notice of delinquency from the holder of any mortgage, or thirty (30) days after providing Owner with written notice of default ("Notice of Default") of the terms of this Declaration, the Community Organization may, but shall not be obligated to, proceed to make any payment required in order to avoid foreclosure or to redeem the Property after foreclosure. Upon making any such payment, the Community Organization shall succeed to all rights of the Owner and shall assume all of the Owner's rights and obligations, subject to the terms of this Declaration. In such event the Owner shall forthwith quit the Property and relinquish possession thereof to the Community Organization.

8. Alterations.

8.1 Construction and Alterations. Any post-purchase construction on the Property requiring issuance of a building permit, including addition of a new building, expansion of an existing building, or the alteration of existing Property, is subject to the following conditions:

(a) Owner shall pay all costs;

(b) All construction shall be performed in accordance with the Master Deed, in a workmanlike manner and shall comply with all applicable laws and regulations;

(c) All construction shall be consistent with the permitted uses set forth in Section 3.1;

(d) At least 30 days prior to commencing construction, Owner shall furnish to Community Organization a copy of any plans, building permits and approval of any design review authority; and

(e) No construction shall commence without the prior written consent of Community Organization and the Association.

8.2 Community Organization will not give consent to any improvements that exceed the original footprint or in any way lessen the long-term affordability of the home.

8.3 Prohibition of Liens. Owner shall not permit a lien of any type to attach to the title of the Property without the prior written consent of the Community Organization.

9. Liability, Insurance, Damage and Destruction, Eminent Domain.

9.1 Owner's Liability and Indemnification of Community Organization. The Owner has sole responsibility and liability to all persons and authorities related to Owner's possession, occupancy, and use of the Property and shall defend, indemnify, and hold the Community Organization and the Association harmless from all liability and claims of liability for injury or damage to person or property from any cause on or about the Property. Owner waives all claims against the Community Organization for such injury or damage. In the event the Community Organization is required to pay any sum that is Owner's responsibility or liability, Owner shall reimburse the Community Organization for such payment and all expenses caused thereby, including attorneys fees and costs.

9.2 Casualty Insurance. Owner shall, at Owner's sole expense, keep all Property continuously insured against loss or damage by fire and extended coverage hazards for the full replacement value of such Property.

9.3 Liability Insurance. Owner shall, at Owner's sole expense, maintain continuously in effect liability insurance covering the Property in the amounts of not less than one hundred thousand dollars ($100,000) for injury to or death of any one person; three hundred thousand dollars ($300,000) for injury to or death of any number of persons in one occurrence; and one hundred thousand dollars ($100,000) for property damage. Upon 30 days' notice to Owner, the dollar amounts of this coverage shall be adjusted upon the Community Organization's demand given not more often than annually. Such insurance shall specifically insure Owner against all liability assumed under this Declaration, as well as all liability imposed by law, and shall also insure the Community Organization as an additional insured so as to create the same liability on the part of insurer as though separate policies had been written for Community Organization and Owner.

9.4 Copies and Endorsements. The Owner shall provide the Community Organization with copies of all policies and renewals of policies. All policies shall also contain endorsements providing that they shall not be cancelled, reduced in amount or coverage or otherwise modified by the carrier without thirty (30) days' prior written notice to Community Organization. The Community Organization shall be entitled to participate in the settlement or adjustment of any losses covered by such policies of insurance.

9.5 Damage and Destruction. Except as provided below, in the event of fire or other damage to the Property, Owner shall take all steps necessary to ensure the repair of such damage and the restoration of the Property to its condition immediately prior to the damage. All such repairs and restoration shall be completed as promptly as possible. Owner shall also promptly take all steps necessary to ensure that the Property is safe and that the damaged does not constitute a danger to persons or property.

9.6 Election Not to Rebuild. If Owner, using reasonable judgment and relying on professional estimates, determines that either:

(a) Full repair and restoration or the Property is physically impossible, or

(b) Insurance proceeds will pay for less than eighty percent (80%) of the cost of repair and restoration (provided Owner has fulfilled all the insurance requirements set forth in Section 9.2 above), then Owner may elect not to repair or restore the Property, in which case all insurance proceeds payable to Owner on account of such damage shall be paid as provided in Section 9.7 below.

9.7 Allocation of Insurance Proceeds. The insurance proceeds shall be paid first to cover any expenses of collecting the proceeds. Remaining proceeds shall be paid to the Association, or if appropriate under the Master Deed, to Owner (or Owner's Permitted Mortgagee to the extent required by the Permitted Mortgage) up to the Maximum Purchase Price (as of immediately prior to the damage) calculated according to the provisions of Section 4 above. The balance of such proceeds, if any, shall be paid to the Community Organization.

9.8 Eminent Domain and Public Dedications. If the Property is taken by reason of eminent domain or other action of public authority prior to the expiration of this Declaration and:

(a) Complete Taking: The Property is taken either in its entirety or to such extent that the Property is lost or damaged beyond repair, the Declaration shall terminate as of the date Owner is required to give up possession of the Property, and the entire amount of any monetary compensation shall be allocated in the way described in Section 9.7 above for insurance proceeds; or

(b) Partial Taking: The taking of a portion of the Property results in damage to the Property only to such an extent that the Property can reasonably be restored to a residential use consistent with this Declaration, Owner shall utilize such of the monetary compensation as the Community Organization shall determine for such restoration. Any balance remaining after, or in the absence of such allocation, shall be allocated as provided for in Subsection 9.8.a.

(c) Proceedings: Any and all proceedings brought by a party in connection with any damages as a result of any taking referred to in this Section shall be conducted at the sole expense of such party. If any provision of law requires that such proceedings be brought by or in the name of the Owner, the Owner shall join in such proceedings or permit the same to be brought in the Owner's name. Each party agrees to do all acts and to execute all documents that may be required to enable the other to maintain such proceedings. If the party required to join in the proceedings incurs any cost or expense in doing so, such party shall be entitled to reasonable reimbursement and this entitlement shall constitute a first charge against any monetary compensation for the taking.

10. General Provisions

10.1 Notices. All notices and other communications which are required under this Declaration shall be in writing and will be deemed to have been duly given (a) upon receipt if express mail, return receipt requested and postage prepaid, or (b) the following business day if sent by recognized overnight courier, with proof of delivery requested and charges prepaid, to:

Leelanau County
Department of Planning and Community Development
Attn: Director of Housing
P.O. Box 546
Leland, Michigan 49654

or to such other address as the Community Organization may specify by written notice to an Owner.

10.2 No Waiver. The Community Organization's failure to exercise any remedy available to it, or its failure to take action with respect to, any breach of the Declaration shall not be deemed to be a waiver of that or any subsequent breach of the same or of any other provision. The Community Organization may grant waivers in the terms of this Declaration, but any such waiver must be in writing and signed by the Community Organization before being effective.

10.3 Severability and Duration. If any provision of this Declaration, or any portion thereof, is invalid or unenforceable under any law, such provision, or portion thereof, shall be deemed reformed or deleted, but only to the extent necessary to comply with such law, and the remaining provisions of this Declaration shall remain in full force and effect and enforced to the fullest extent permitted by law. The Community Organization's intention is that its rights and options under this Declaration shall continue in full force and effect. In the event any such right or option shall be construed to be subject to any rule of law limiting its duration, the time period for the exercise of such right or option shall be construed to expire within ninety (90) years after its creation.

10.4 Miscellaneous.

(a) This Declaration is binding upon all Owners and inures to the benefit of the Community Organization and its successors and assigns in accordance with the provisions of this Declaration. This Declaration confers no benefits, rights, or remedies on, and may not be enforced by, any person other than the Community Organization, its successors or assigns, except a person that is designated in writing as a third party beneficiary by the Community Organization. The

provisions of this Declaration and the rights of any designated third party beneficiary affected may be amended, waived, or terminated without the consent of or notice to any such third party beneficiary. Any third party that is specifically designated as a beneficiary is subject to all limitations and conditions set forth herein.

(b) This Declaration may be amended or modified only in writing executed by the Community Organization. Any such changes shall be binding on any Owner that consents or that acquires an interest in the Property after such change.

(c) This Declaration shall be interpreted in accordance with and governed by the laws of the State of Michigan.

(d) Whenever a pronoun is used in this Declaration, it shall be construed to represent either the singular or the plural, masculine or feminine, as the case shall demand.

(e) As part of any enforcement action on the part of the Community Organization, the Owner shall pay all court costs and reasonable attorney's fees incurred by The Community Organization in connection with enforcement of this Declaration.

Exhibits:

A Legal Description
B Intent to Sell Notice
C Permitted Mortgages

Exhibit A to Declaration of Affordability

LEGAL DESCRIPTION

The legal description of the Property is set forth in the Master Deed to which this Declaration is attached and into which it is hereby incorporated as if set forth in full.

Exhibit B to Declaration of Affordability

INTENT TO SELL NOTICE

I/we, _____ *{fill in your name},* as Owner, as of today's date, hereby give notice to Leelanau County, by and through its Department of Planning and Community Development, as Community Organization, of my intent to sell the Property located at _____ *{fill in property address}.*

Further, as of this date I/we _____ *{have/have not}* a prospective buyer. If I/we have not identified a prospective buyer, I/we am not making a recommendation in this regard.

If I/we have identified a potential buyer, that persons name(s) is/are _____ *{fill in proposed buyer's name}.*

Signed: _____

Date: _____

Exhibit C to Declaration of Affordability

PERMITTED MORTGAGES

The provisions set forth in this Exhibit shall be understood to be provisions of Section 6 of this Declaration to which the Exhibit is attached and in which the Exhibit is referenced. All terminology used in this Exhibit shall have the meaning assigned to it in the Declaration.

A) STANDARD PERMITTED MORTGAGE: A "Standard Permitted Mortgage," as identified in Section 6(a) of the Declaration to which this Exhibit is attached shall be a mortgage or a deed of trust securing a promissory note that meets the following requirements.

1) Such Mortgage shall run in favor of either (a) a so-called "institutional lender" such as, but not limited to, a federal, state, or local housing finance agency, a federally insured bank (including federally insured savings and loan associations or a federally insured credit union), an insurance company, a pension and/or profit-sharing fund or trust, or any combination or affiliate of the foregoing, the policies and procedures of which institutional lender or an affiliate thereof are subject to direct governmental supervision, or (b) a "community development financial institution" as certified by the U.S. Department of the Treasury, or similar non-profit lender to housing projects for low and moderate income persons.

2) Such Mortgage shall be a first lien on the Property (the "Security").

3) Such Mortgage and related documentation shall provide, among other things, that in the event of a default in any of the mortgagor's obligations thereunder, the holder of such Mortgage shall notify the Community Organization of such fact and the Community Organization shall have the right (but shall not have the obligation) within 120 days after its receipt of such notice, to cure such default in the mortgagor's name and on mortgagor's behalf, provided that current payments due the holder during such 120-day period (or such lesser time period as may have been required to cure such default) are made to the holder, and shall further provide that said holder shall not have the right, unless such default shall not have been cured within such time, to accelerate the note secured by such Mortgage or to commence to foreclose under the Mortgage on account of such default.

4) Such Mortgage and related documentation shall not contain any provisions other than provisions generally contained in mortgages used for similar transactions in the State of Michigan by institutional mortgagees or in Fannie Mae or Freddie Mac uniform instruments.

5) Such Mortgage and related documentation shall not contain any provisions which could be construed as rendering the Community Organization or any subsequent holder of the Community Organization's interest in and to this Declaration, or their respective heirs, executors, successors or assigns, personally liable for the payment of the debt evidenced by such note and such Mortgage or any part thereof.

6) It is the intention of the parties hereto that the Community Organization's consent to such Mortgage shall be without any liability on the part of, or recourse to the Community Organization for any deficiency judgment. This consent shall be in addition to and not in lieu of compliance with the terms and conditions of the Master Deed and bylaws of the Association.

7) Such Mortgage and related documentation shall provide that in the event any part of the Security is taken in condemnation or by right of eminent domain, the proceeds of the award shall be paid over to the holder of the Mortgage.

B) RIGHTS OF PERMITTED MORTGAGEE: The rights of a holder of a Permitted Mortgage (Permitted Mortgagee) as referenced under Section 6 of the Declaration to which this Exhibit is attached shall be as set forth below.

1) A Permitted Mortgagee shall without requirement of consent by the Community Organization have the right, but not the obligation, to:

   a) cure any default under this Declaration, and perform any obligation required under this Declaration, such cure or performance by a Permitted Mortgagee being effective as if it had been undertaken and performed by Owner;

b) acquire and convey, assign, transfer and exercise any right, remedy or privilege granted to Owner by this Declaration or otherwise by law, subject to the provisions, if any, in said Permitted Mortgage, which may limit any exercise of any such right, remedy or privilege; and

c) rely upon and enforce any provisions of the Declaration to the extent that such provisions are for the benefit of a Permitted Mortgagee.

2) In the event that the Community Organization sends a notice of default under the Declaration to Owner, the Community Organization shall also send a notice of Owner's default to Permitted Mortgagee. Such notice shall be given in the manner set forth in Section 10.1 of the Declaration to the Permitted Mortgagee at the address that has been given by the Permitted Mortgagee to the Community Organization by a written notice to the Community Organization sent in the manner set forth in said Section 10.1 of the Declaration.

EXECUTIVE DOCUMENT SUMMARY

Department: Board of Commissioners

Contact Person: Larry Mawby

Telephone Number: 231-866-0512

Submittal Dates

☑ Select Meeting Type: Executive Board

Date of Meeting: 11/14/2023

Financial/Source Selection Method

☑ Select One: GTB 2% Allocation Request

☐ Other:

☐ *Account No.:*

☐ *CIP Project?*

☐ *If Grant, Match Account No.:*

Vendor:

Address/
Phone:

Description: 2% Allocation Request/Agr.

Budgeted Amount: $ 62,900.00 Contracted Amount: $ 12,900.00

Document Description

☐ **Request to Waive Board Policy on Bid Requirements** ☐ **Financial Review Completed** ☐ **Department Head/Elected Official Authorization**

The Peninsula Housing organization is requesting the County Board of Commissioners approve a Grand Traverse Band of Ottawa and Chippewa Indians 2% Allocation Application, for funding to go towards a collaborative design process for affordable housing (full application is attached).

Suggested Recommendation:

I move to recommend that the County Board of Commissioners approve the Grand Traverse Band of Ottawa and Chippewa Indians 2% Allocation Application on behalf of Peninsula Housing in the amount of $12,900.00 to help fund a collaborative design process for affordable housing, as presented.

Department Approval: Date: 11/07/2023

Tribal Council Allocation of 2% Funds
Application Form

PLEASE NOTE:

Under the terms of the consent decree, which settled *Tribes v. Engler* (Case No. 1:90-CV-611, U.S. Dist. Ct., West. Dist. Mich.), the Grand Traverse Band of Ottawa and Chippewa Indians, as defined in the stipulation, has agreed to pay 2% of its video gaming revenue to local units of government (i.e., local township, village, city, county board of commissioners, public school system).

***ONLY APPPLICATIONS FROM LOCAL UNITS OF GOVERNMENT LOCATED WITHIN GTB'S 6-COUNTY SERVICE AREA WILL BE CONSIDERED FOR 2% FUNDING**

1. Allocation Cycle: _____ JUNE – New submission date, Postmarked by **MAY 31st**
   X DECEMBER – New submission date, Postmarked by **NOVEMBER 30th**

2. Name of Applicant: Leelanau County Board of Commissioners/Peninsula Housing
   Address: 8527 E. Government Center Dr., Suite 106
   Suttons Bay, Michigan 49682
   Phone #: 231-256-9711 Fax #: 231-256-0120
   Printed Name: Ty Wessell

   - **Authorized Signature:** _____
     (Signature of local unit of government official; e.g., county/city official, township supervisor, village president, college president, school superintendent)

   Title: Chairman, County Board of Commissioners
   E-mail address: dallen@leelanau.gov

   Printed Name of contact person: Larry Mawby
   Telephone #: 231-866-0512 Fax #: n/a
   E-mail address: home@peninsula-housing.org

3. Type of Applicant:

_____ Local Government	_____ Local Court	
_____ Township	_____ County Commissioner	_____ Road Commission
_____ Public School District	_____ College	_____ Charter School
_____ Public Library	_____ Sheriff/Police Department	_____ Fire Department

X 501c3 applying through local unit of government (name): Peninsula Housing

4. Fiscal Data: Amount Requested: $ 12,900 Percent: 21 %

Local Leveraging: (Match) $ 50,000 Percent: 79 %

Total Budget: $ 62,900 Percent: 100 %

5. Target Population numbers: x Children x Adults _____ Elders

(Indicate the number of GTB members) _____ Total GTB member Community _____ Others

6. Counties Impacted: _____ Antrim _____ Benzie _____ Charlevoix

_____ Grand Traverse x Leelanau _____ Manistee

7. Brief Description (purpose of funding); include statement of need:

Peninsula Housing seeks support to fund a collaborative design process to create development scenarios for affordable and attainable housing on two parcels in Suttons Bay. The properties could accommodate as many as 100 units and will primarily provide housing for renters and homeowners making 80% or less of Leelanau's average median income (AMI). We will use the development scenarios to foster and confirm partnerships with local governments, nonprofits, and businesses to secure public and private funding and to engage with and build support in our community for long-lasting affordable housing solutions.

Northern Michigan, and Leelanau County specifically, is facing an attainable and affordable housing crisis. 40% of Leelanau residents fall below the ALICE threshold, and a Housing Needs Assessment by Housing North in 2023 found a need for over 650 new affordable and attainable housing units in Leelanau County through 2025. This project will help our community prepare for the creation of permanently affordable housing and provide a necessary first step to ensuring new housing remains affordable in perpetuity.

This project will enable Peninsula Housing to contract with Urban Design Associates (UDA) to gather community input and determine the feasibility of each site, provide illustrations for community and investor outreach, inform further site and architectural design, as well as provide our local network of organizations a framework for future affordable housing efforts in Leelanau County and northern Michigan. The process will engage a network of organizations, community members, and local professionals.

Peninsula Housing has already secured a $50,000 grantfor this project from the Michigan Department of Agriculture and Rural Development's Rural Readiness Grant Program (RRPG). A grant from the Tribal Council's allocation of 2% funds would be leveraged to cover the $12,900 matching requirement for the RRPG grant.

8. This question only pertains to Indian Education Programs of Public School Systems. If you are not an Indian Education Program of a Public School system, skip to question 9.

(a) **Program formula: (1) $5,000, up to $10,000 per school district + (<u>$1,000, up to $1,500</u> x # of GTB member students) = allocation. The increase to the formula will be determined by the previous timely 2% report received, and the data provided within the report on the success of the school's Indian Education Program as a result of the 2% allocation.**

<u>Please note</u>: 1) In completing this section, only provide the student numbers of currently enrolled GTB members; do not include the general Native American data of your school system; and 2) there will be a cap of $100,000, up to $125,000 per school, based on the school's GTB membership count and data provided within the 2% report received from the previous year.

(b) Recommendation from Parent Committee: _____ YES _____ NO

<u>Please have the Parent Committee sign the attached Certification Form.</u>

(c) Describe parent involvement in project: _____

_____

(d) Does the school receive Title VII Indian Education Funds? _____ YES _____ NO

If yes, how much: _____

9. What are the start and completion dates of the proposed project?

Start 3/1/2024 Completion 1/1/2025

10. Has applicant received prior awards through the Tribe's 2% funding allocation?

_____ YES X NO. If yes, please list the start and end dates and amount:

_____ - _____ and amounts: _____

_____ - _____ and amounts: _____

_____ - _____ and amounts: _____

11. Is the proposed project new X or a continuation project _____?

If this is a continuation project, please explain why there is a need to continue funding:
N/A

_____

_____

12. If the previous project has been completed, did you submit your 2% report? _____ YES _____ NO.

The 2% report must be submitted one year from the date you received your 2% award. If your report has not been submitted, <u>your current application will not be considered!</u> 2% Reports are mandatory for future grant considerations. Mail your 2% report to: Attn: 2% Reports; GTB, 2605 N.W. Bay Shore Drive, Peshawbestown, MI 49682.

N/A

13. Impact of Gaming on local program: (e.g., increase in student population, resulting from increase in Tribal employment or increase in emergency services to Casino patrons).

Increase in the number of people in need of appropriately priced housing, resulting from the increase in Tribal and emergency services employment.

14. How will the success of the project be assessed (evaluation plan)? _____

Success will be assessed on our ability to create a community supported affordable housing development plan for parcels owned by Peninsula Housing in Suttons bay.

15. If new staff is required, will preference be given to Native American applicants?

_____ YES _____ NO N/A

16. Budget: Please attach a one-page itemization of the planned budget. Include explanation for each category of the budget. Attached

<u>IMPORTANT!! BEFORE YOU MAIL YOUR 2% APPLICATION, PLEASE REMEMBER TO:</u>

1) Execute authorized signature on first page, question #2.
2) Attach 1-page budget
3) Attach Parent Committee Certification Form if application is from an Indian Education/Title VII Program.
3) Submit by appropriate deadline**:**
   - **<u>If for June cycle, postmarked by May 31st.</u>**
   - **<u>If for December cycle, postmarked by November 30th.</u>**

Mail completed 2% applications to:

Attention: 2% Program
Grand Traverse Band of Ottawa and Chippewa Indians
2605 N.W. Bay Shore Drive
Peshawbestown, MI 49682

If you have any questions, please call 231-534-7601.

Grand Traverse Band of Ottawa and Chippewa Indians 2% Indian Education Parent Committee Certification Form

Instructions: By filling out this form, you are certifying that only one 2% application is being submitted for your school district's Indian Education/Title VII program.

We affirm that we have participated in providing information regarding the content of this 2% application for the Grand Traverse Band of Ottawa and Chippewa Indians (GTB).

We affirm that previous 2% reports have been submitted to GTB for 2% funding that this school district has received from GTB.

As current members of this school district's Parent Committee for the Indian Education Program/Title VII, we approve of and certify that this 2% application is being submitted on behalf of the _____ School District.
(Name of school district)

Print Name	Sign Name	Date
Print Name	Sign Name	Date
Print Name	Sign Name	Date
Print Name	Sign Name	Date
Print Name	Sign Name	Date
Print Name	Sign Name	Date

Peninsula Housing

Affordable Housing Development Scenario Plan

EXPENSES

Printing	$1,000
UDA Analysis and due diligence	$4,700
Umlor Site Capacity Analysis	$9,400
UDA Stakeholder Listening	$7,500
UDA Scenario Testing	$34,800
UDA Final Plans	$2,500
UDA Reimbursable Expenses	$3,000
Total Project Cost	**$62,900**

REVENUE	**Pending**	**Committed**	
GTB 2%	$12,900		
RRGP		$50,000	
Total Revenue	**$12,900**	**$50,000**	**= $62,900**

EXECUTIVE DOCUMENT SUMMARY

Department: Probate/Family Court	**Submittal Dates**
Contact Person: Cameron Clark	☒ Executive Board: 11/14/2023
Telephone No.: 231-256-9803	☒ Regular Session: 11/21/2023

Source Selection Method	**VENDOR:**
☐ Select One	Address:
☐ Other:	Phone:

Budgeted Amount: $ 0.00 Contracted Amount: $ 5,000.00

Document Description

☐ Select One ☒ Other 2% Tribal Council Allocation

☐ **Request to Waive Board Policy on Bid Requirements**

This is a request to approve the application to the Grand Traverse Band Tribal Council 2% Allocation on behalf of Child & Family Services' Safe Haven program by the Leelanau County Family Court. Please see description of the program in the application form. The request is for $5,000.00 to support the program.

Suggested Recommendation: Motion to recommend to the Leelanau County Board of Commissioners approval of the 2% Tribal Council Allocation request for Leelanau County Family Court to support the request for Tribal Council Allocation of 2% Funds for Safe Haven, through Child & Family Services.

Department Head Approval: Marian Konkowski Date: 10/06/2023

Tribal Council Allocation of 2% Funds
Application Form

PLEASE NOTE:

Under the terms of the consent decree, which settled *Tribes v. Engler* (Case No. 1:90-CV-611, U.S. Dist. Ct., West. Dist. Mich.), the Grand Traverse Band of Ottawa and Chippewa Indians, as defined in the stipulation, has agreed to pay 2% of its video gaming revenue to local units of government (i.e., local township, village, city, county board of commissioners, public school system).

***ONLY APPPLICATIONS FROM LOCAL UNITS OF GOVERNMENT LOCATED WITHIN GTB'S 6-COUNTY SERVICE AREA WILL BE CONSIDERED FOR 2% FUNDING**

1. Allocation Cycle: _____ JUNE – New submission date, Postmarked by **MAY 31st**
   X DECEMBER – New submission date, Postmarked by **NOVEMBER 30th**

2. Name of Applicant: 13th Judicial Circuit Ct-Family Div./Child & Family Services, Safe Haven
   Address: 8527 E. Government Center Dr., Suite 203
   Suttons Bay, Michigan 49682
   Phone #: 231-256-9711 Fax #: 231-256-0120
   Printed Name: Ty Wessell

   - **Authorized Signature:** _____
     (Signature of local unit of government official; e.g., county/city official, township supervisor, village president, college president, school superintendent)

   Title: Chairman, County Board of Commissioners
   E-mail address: dallen@leelanau.gov

   Printed Name of contact person: Tara Ward
   Telephone #: 231-946-8975 ext 1201 Fax #: 231-256-9845
   E-mail address: tward@cfs3L.org

3. Type of Applicant:

_____ Local Government	_____ Local Court	
_____ Township	_____ County Commissioner	_____ Road Commission
_____ Public School District	_____ College	_____ Charter School
_____ Public Library	_____ Sheriff/Police Department	_____ Fire Department

   X 501c3 applying through local unit of government (name): Child & Family Services

4. Fiscal Data:

Amount Requested:	$ 5,000	Percent: 1.79%
Local Leveraging: (Match)	$ 279,692	Percent: 98.21%
Total Budget:	$284,692	Percent: 100 %

5. Target Population:

(Indicate the number of GTB members)

Children X Adults X _____Elders

___X_Total GTB member Community ____Other

X Antrim	X Benzie	X Charlevoix
X Grand Traverse	X Leelanau	X Manistee

6. Brief Description (purpose of funding); include statement of need:

Child & Family Services' (CFS') Safe Haven program supervised visits and safe child exchanges prevent domestic violence by being a mediary between parents, and by providing a safe and supervised venue for parental visits by an offending parent. Research shows that when children witness domestic violence, it can permanently alter their brains, causing anxiety, depression, and low self-esteem; difficulty sleeping, making friends, and concentrating in school; and cause higher rates of juvenile school drop-out, substance abuse, pregnancy, and crime. Safe Haven creates staggered arrival times, separate entrances, and communication services between parents, and visit supervision. This prevents children from suffering from witnessing or being a part of extreme conflicts or domestic violence. In a year, children exchanged weekly between contentious parents may see up to 52 incidents of verbal, emotional, or physical abuse! These instances are prevented by Safe Haven services.

Safe Haven provides a safe, age- appropriate and friendly place for supervision when supervised visits between children and non-custodial parents are court-ordered. This allows children to build positive relationships with both parents. CFS is always hopeful that parents who have supervised visits can grow and change and work towards positive outcomes. Safe Haven also provides: communication services between parents for child exchanges, reducing the opportunity for conflict or violence; educational resources; and connections with other services from which clients may benefit. Our goal at Safe Haven is to remove stress from parents so that they can focus their energy on building and maintaining positive and healthy relationships with their children.

The Grand Traverse Band has been a strong and consistent supporter of Safe Haven for many years, as Safe Haven provides services in the Grand Traverse Band's six-county service area. Safe Haven began in 2004 with just seven families. Safe Haven has now provided nearly 40,800 visits and exchanges, serving over 2,400 children and families. In FY 23, Safe Haven facilitated 1,053 visits and 793 exchanges. Nearly 11% of these were for Leelanau County residents (please note: we are requesting a grant for under 2% of the program budget in order to help serve the 11% of its clients that are from Leelanau County). An average of 64 families and 81 children were served each and every month.

Every year, more success stories emerge from Safe Haven. This year, two children write a charming thank you letter to the Safe Haven staff when their family "graduated" from the program. Their mom stated that she was so grateful for our program, as her girls loved their Daddy, but it just wasn't safe at the time. Dad told us he knew he had an attitude when he first started using Safe Haven but quickly realized we were trying to help. He apologized for his ill temperament, and stated that the rooms were nice, and he loved having the option to play outside on the Safe Haven playground with his kids. He was grateful that Safe Haven staff were very accommodating to him and his family.

Other client comments in the past year have included, "The staff are very good with keeping me aware of the things that might be concerning." Also, "Everything is great!" and, "We appreciate you guys and all of your support."

Last year, the CFS Board of Directors received a moving letter from a Safe Haven client, who said, "On behalf of my family, I thank you. I thank each and every one of you. We are grateful for your support and we have benefited from all of your unique contributions on so many levels. You and Safe Haven have made a healthy difference in our lives. We will always be touched by your generous efforts."

We are happy to be able to support these families. Safe Haven is **the only program of its kind in northern Michigan.** The next closest options for supervised visitation and exchange are in Bay City and Grand Rapids – more than two hours away in good weather. That does not work for the GTB members and non-members that we serve.

In addition, Legal Services of Northern Michigan collaborates with CFS to help Safe Haven clients with their legal issues at no charge. Safe Haven also alleviates the burden on law enforcement and emergency dispatch during parenting time, visits and exchanges. This makes it a perfect fit for the 2% program.

Safe Haven is partially supported by the Victims of Crime Act (VOCA). Our renewed contract with VOCA began October 1, 2022. Unfortunately, while we were asked to expand services, we (and all grantees in Michigan) were also given $100,000 less per year to operate with for this past year and the next two years. Grand Traverse Band's support will help us continue the good work of Safe Haven, in spite of this funding gap.

Thank you for being a faithful supporter of this important program over the years.

7. This question only pertains to Indian Education Programs of Public School Systems. If you are not an Indian Education Program of a Public School system, skip to question 9.

(a) **Program formula: (1) $5,000, up to $10,000 per school district + (<u>$1,000, up to $1,500</u> x # of GTB member students) = allocation. The increase tothe formula will be determined by the previous timely 2% report received, and the data provided within the report on the success of the school's Indian Education Program as a result of the 2% allocation.**

<u>Please note</u>: 1) In completing this section, only provide the student numbers of currently enrolled GTB members; do not include the general Native American data of your school system; and 2) there will be a cap of $100,000, up to $125,000 per school, based on the school's GTB membership count and data provided within the 2% report received from the previous year.

(b) Recommendation from Parent Committee: YES NO

<u>Please have the Parent Committee sign the attached Certification Form.</u>

(c) Describe parent involvement in project:

(d) Does the school receive Title VII Indian Education Funds? <u>YES</u> <u>NO</u>

If yes, how much: _____

8. What are the start and completion dates of the proposed project?

Start: <u>Jan 1, 2024</u>

Completion: <u>Dec 31, 2024</u>

9. Has applicant received prior awards through the Tribe's 2% funding allocation?

XYES NO. If yes, please list the start and end dates and amount:

6/28/23-5/31/24	$16,000	YouthWork (Bingham Twp)
7/28/23-12/30/23	$30,000	Safe Haven, Grand Traverse County
8/21/23-7/31/24	$10,000	YouthWork
2/27/23-9/30/23	$5,000	Safe Haven, Leelanau County

9/1/22-11/30/22	$5,000	Safe Haven, Leelanau County
9/1/22-11/30/22	$12,466.11	Safe Haven, Grand traverse County
7/27/21-11/30/22	$12,500	Safe Haven, Grand Traverse County
7/1/21-11/30/21	$5,000	Safe Haven, Leelanau County
5/31/21-11/30/21	$36,000	YouthWork (Bingham Twp, Forest Area Schools, Leelalnau Twp, TBAISD)
7/1/21-9/30/21	$12,500	Safe Haven, Grand Traverse County
2/21/20-11/30/20	$20,000	YouthWork programs
4/8/20 – 11/20/20	$34,850.00	Safe Haven

Other grants stretch from 2019 to 2004; please let us know if you want a complete list.

10. Is the proposed project new ___ or a continuation project X ___?

If this is a continuation project, please explain why there is a need to continue funding:

This year your grant is of critical importance. The base VOCA grant for Safe Haven was cut by $100,000 per year, at the same time requiring expansion of services. Because it is an ongoing project, it does need ongoing funding.

11. If the previous project has been completed, did you submit your 2% report? X YES ___ **The 2% report must be submitted one year from the date you received your 2% award. If your report has not been submitted, <u>your current application will not be considered!</u> 2% Reports are mandatory for future grant considerations. Mail your 2% report to: Attn: 2% Reports; GTB, 2605 N.W. Bay Shore Drive, Peshawbestown, MI 49682.**

12. Impact of Gaming on local program: (e.g., increase in student population, resulting from increase in Tribal employment or increase in emergency services to Casino patrons).

The economic activity generated by gaming is a positive factor in the community; it provides well-paying jobs with health insurance. It brings people to our region to live. However, domestic violence occurs regardless of income, employment, or other factors. The more that people that come to northern Michigan to live and work, the more that our area will experience domestic violence. Parents employed within the local gaming industry experience domestic violence, separation, and divorce just like families not working in the gaming industry. Therefore, the local presence of casinos in Grand Traverse, Leelanau, and Manistee Counties increases the number of children and families in our region that need/will need Safe Haven services, due to people moving to the region to work at these casinos. Gaming also increases tourism and economic activity, which contributes significantly to the steady population increase we have experienced over the past decade. People come north to experience our region's natural beauty, farms, casinos, restaurants, and recreation. People see what a wonderful area it is and move here. Again, an increase in population causes an increase in the need for Safe Haven services.

For some individuals, participating in gaming can become addiction-- behavior that is difficult to control. Complications of pathological gambling include drug and alcohol use; financial, social and legal problems; and even suicide attempts (*National Institutes of Health*). They can cause increased family stress, arguments, and domestic violence often resulting in separation and/or divorce. These can all negatively impact children and child-parent relationships. Safe Haven supervised visits and safe exchanges can provide a safe setting for victims and their children. Safe Haven also provides referrals to community services when needed.

13. How will the success of the project be assessed (evaluation plan)?

Safe Haven implements surveys continuously. Some comments from 2023 surveys include:
"The staff are very good with keeping me aware of the things that might be concerning."
"Everything is great!"
"We feel good as is!"
"We appreciate you guys and all of your support."

Additionally, evaluation of the Safe Haven program occurs bi-annually with comprehensive written data on services delivered, staffing, staff training and development, program activities, policies and planning, numbers served, demographics, and other information. Case documentation is reviewed and results are compiled, documenting the number of adults who have exhibited increased parenting and communications knowledge and skills, and the number of children with decreased stress and healthy interactions with both parents.

14. If new staff is required, will preference be given to Native American applicants?

X YES NO

15. Budget: Please attach a one-page itemization of the planned budget. Include explanation for each category of the budget.

IMPORTANT!! BEFORE YOU MAIL YOUR 2% APPLICATION, PLEASE REMEMBER TO:

1) Execute authorized signature on first page, question #2.
2) Attach 1-page budget
3) Attach Parent Committee Certification Form if application is from an Indian Education/Title VII Program.
3) Submit by appropriate deadline:
   - **If for June cycle, postmarked by May 31st.**
   - **If for December cycle, postmarked by November 30th.**

Mail completed 2% applications to:

Attention: 2% Program

Grand Traverse Band of Ottawa and Chippewa Indians
2605 N.W. Bay Shore Drive
Peshawbestown, MI 49682

If you have any questions, please call 231-534-7601

Child and Family Services:
Safe Haven Program Budget FY24

	10/01/2023 Through 09/30/2024 Agency Budget
Operating Revenue	
Grant Revenues	250,000
Contributions	38,191
Sales Returns and Discounts	(3,498)
Total Operating Revenue	284,692
Expenditures	
Client Needs	6,527
Personnel	203,500
Occupancy	6,156
Professional Fees	22,126
General and Administrative Expenses	
Advertising and Promotion	6
Bad Debt Expenses	(362)
Business Licenses and Permits	9
Conferences, Conventions, and Meetings	582
Depreciation	224
Due and Subscriptions	2,810
Equipment Rental	112
Insurance	3,364
Miscellaneous Expense	646
Office Supplies	2,692
Other Expenses	225
Printing and Publications	96
Postage and Delivery	448
Repairs and Maintenance	4,170
Telecommunication	3,580
Travel Expenses	395
Utilities	745
Total General and Administrative Expenses	19,742
Total Direct Expenditures	258,052
Admin/Indirect Expenses	25,805
Total Expenditures	283,857

EXECUTIVE DOCUMENT SUMMARY

Department: Senior Services

Contact Person: Lena Vander Meulen

Telephone Number: (231) 256-8121

Submittal Dates

☑ Select Meeting Type: Executive Board

Date of Meeting: 11/14/2023

Financial/Source Selection Method

☐ Select One: Select One

☑ Other: GTB 2% Allocation Request

☐ *Account No.:*

☐ *CIP Project?*

☐ *If Grant, Match Account No.:*

Vendor: Leelanau Christian Neighbors

Address/ Phone: 7322 E Duck Lake Rd.
P.O. Box 196
Lake Leelanau, MI 49653

Description: 2% Allocation Request/Agr.

Budgeted Amount: $ 0.00

Contracted Amount: $ 34,000.00

Document Description

☐ **Request to Waive Board Policy on Bid Requirements**

☑ **Department Head/Elected Official Authorization**

Leelanau County Senior Services (LCSS) is applying for a Grand Traverse Band 2% Allocation on behalf of Leelanau Christian Neighbors (LCN), totaling $34,000.00 to assist seniors in accessing food through LCN's food pantry services.

LCSS and LCN have worked closely together to support our local seniors. LCN reports that 32% of residents utilizing the Food Pantry are seniors. Our collaboration addresses food insecurities of our senior population through the distribution of bags at LCN, as well as, access to the food pantry to deliver pantry goods to seniors who are homebound. Our collaborative efforts have made it possible to offer additional support and resources to our County's growing senior population.

Suggested Recommendation:

I move to recommend that the County Board of Commissioners approve the Grand Traverse Band 2% Allocation application by Leelanau County Senior Services on behalf of Leelanau Christian Neighbors totaling $34,000.00 to be used for food pantry services for seniors.

Department Approval: Lena Vander Meulen Digitally signed by Lena Vander Meulen Date: 2023.10.16 09:53:43 -04'00'

Date: 10/16/2023

LEELANAU CHRISTIAN NEIGHBORS

PO Box 32, Suttons Bay, MI 49682 • 231-271-0091
www.leelanauchristianneighbors.org

September 29, 2023

Ms. Lena Vander Meulen
8527 E. Government Center Dr., Suite 106
Suttons Bay, MI 49682

Re: Tribal Council Allocation of 2% Funds from December 2022 – Final Grant Report

Dear Ms. Vander Meulen-
The purpose of the $18,040 grant awarded to Leelanau Christian Neighbors (LCN) received in January 2023 was to support food pantry services to senior residents of Leelanau County, defined as persons aged 60 years and older. The grant was to provide a portion of the expenses incurred by these programs which could be attributed to the needs of seniors.

The grant was funded through Senior Services of Leelanau County which administered the funds under a Memorandum of Understanding dated May 10, 2017.

The purpose of this report is to provide a summary of the disposition of the grant money.

LCN's total food expense for its Food Pantry to Leelanau County from January 1, 2023 through September 28, 2023 was $197,232.65. At an estimated 32% of that total being food to seniors, the total senior expenditure would be $63,114 to date. Funds provided an estimated 130 bags of food given out monthly to Leelanau County's seniors. Of this total, $18,040 (100% of grant goes toward food purchases) was funded from the grant and the balance was paid from donations to LCN.

The food pantry expenses paid out to the full grant amount of $18,040. This amount was outlined in the Budget section of the grant application. It is important to note there are three and a half more months of expenses (October through December 2023) to cover the rest of the food expenses, which will be funded by donations to LCN. Additionally, attendance has increased by approximately 40% and the cost of food continues to increase, thereby adding additional expense.

LCN genuinely appreciates the support and collaboration from both Senior Services of Leelanau County and the Grand Traverse Band of Ottawa and Chippewa Indians. We look forward to a continuation of both partnerships and support which help provide Leelanau County senior residents with food through the Food Pantry.

Sincerely,

Tammy Sutton

Tammy Sutton
LCN Grant Writer

Cc: Chairman David M. Arroyo, Grand Traverse Band of Ottawa and Chippewa Indians

Tribal Council Allocation of 2% Funds
Application Form

PLEASE NOTE:

Under the terms of the consent decree, which settled *Tribes v. Engler* (Case No. 1:90-CV-611, U.S. Dist. Ct., West. Dist. Mich.), the Grand Traverse Band of Ottawa and Chippewa Indians, as defined in the stipulation, has agreed to pay 2% of its video gaming revenue to local units of government (i.e., local township, village, city, county board of commissioners, public school system).

***ONLY APPPLICATIONS FROM LOCAL UNITS OF GOVERNMENT LOCATED WITHIN GTB'S 6-COUNTY SERVICE AREA WILL BE CONSIDERED FOR 2% FUNDING**

1. Allocation Cycle: _____ JUNE – New submission date, Postmarked by **MAY 31st**
   X DECEMBER – New submission date, Postmarked by **NOVEMBER 30th**

2. Name of Applicant: Leelanau County Senior Services/Leelanau Christian Neighbors
   Address: 8527 E. Government Center Dr., Suite 106
   Suttons Bay, Michigan 49682
   Phone #: 231-256-8121 Fax #: 231-256-8129
   Printed Name: Ty Wessell

- **Authorized Signature:** _____
  (Signature of local unit of government official; e.g., county/city official, township supervisor, village president, college president, school superintendent)

   Title: Chairman, County Board of Commissioners
   E-mail address: dallen@leelanau.gov

   Printed Name of contact person: Mary Stanton, Executive Director, LCN
   Telephone #: 231-994-2271 Fax #: n/a
   E-mail address: maryhstanton@gmail.com

3. Type of Applicant:
   _____ Local Government _____ Local Court
   _____ Township _____ County Commissioner _____ Road Commission
   _____ Public School District _____ College _____ Charter School
   _____ Public Library _____ Sheriff/Police Department _____ Fire Department
   X 501c3 applying through local unit of government (name): Leelanau Christian Neighbors

4. Fiscal Data: Amount Requested: $ 34,000 Percent: 25 %

Local Leveraging: (Match) $ 102,000 Percent: 75 %

Total Budget: $ 136,000 Percent: 100 %

5. Target Population numbers: _____ Children _____ Adults x Elders

(Indicate the number of GTB members) (Notes) Total GTB member Community _____ Others

6. Counties Impacted: _____ Antrim _____ Benzie _____ Charlevoix

_____ Grand Traverse x Leelanau _____ Manistee

7. Brief Description (purpose of funding); include statement of need:

LCN is continuing to operate its six programs, with the Food Pantry its source of provision of food to resident seniors. LCN collaborates with Leelanau County Department of Senior Services to address food insecurity issues of its seniors. The Michigan Food Security Council Report indicates that there is a need to increase availability of healthy fresh food, and LCN does that on a weekly basis by providing healthy protein, dairy, and produce every week. LCN reports that 32% of residents utilizing the Food Pantry are seniors. Food Pantry attendance has significantly increased, currently providing an average of 620 bags weekly(an increase of almost 52% from 2022). We are seeing more new users who have never needed the Food Pantry before. The cost of food has risen significantly, and caused the 2023 food budget to increase by more than 52% over the previous year's budget. This causes a strain on both residents' budgets as well as ours and the Food Pantry is more focused on healthy food options than ever before. LCN partners with both local farmers and retail stores to provide the freshest food at the least cost possible. Native Americans comprised 21% of attendance in 2023, an increase of 4%. Grant funds provided will go 100% toward purchase of food for the residents. As we experience continual escalation in both attendance and food costs, we are increasingly looking to sources of help to assist us as we reach out to our food insecure neighbors, especially seniors whose budgets do not allow flexibility.

8. This question only pertains to Indian Education Programs of Public School Systems. If you are not an Indian Education Program of a Public School system, skip to question 9.

(a) **Program formula: (1) $5,000, up to $10,000 per school district + (<u>$1,000, up to $1,500</u> x # of GTB member students) = allocation. The increase to the formula will be determined by the previous timely 2% report received, and the data provided within the report on the success of the school's Indian Education Program as a result of the 2% allocation.**

<u>Please note</u>: 1) In completing this section, only provide the student numbers of currently enrolled GTB members; do not include the general Native American data of your school system; and 2) there will be a cap of $100,000, up to $125,000 per school, based on the school's GTB membership count and data provided within the 2% report received from the previous year.

(b) Recommendation from Parent Committee: ☐ YES ☐ NO

<u>Please have the Parent Committee sign the attached Certification Form.</u>

(c) Describe parent involvement in project: _____

_____

(d) Does the school receive Title VII Indian Education Funds? ☐ YES ☐ NO

If yes, how much: _____

9. What are the start and completion dates of the proposed project?

Start 1/1/2024 Completion 12/31/2024

10. Has applicant received prior awards through the Tribe's 2% funding allocation?

☑ YES ☐ NO. If yes, please list the start and end dates and amount:

See application Notes - _____ and amounts: _____

_____ - _____ and amounts: _____

_____ - _____ and amounts: _____

11. Is the proposed project new _____ or a continuation project X ?

If this is a continuation project, please explain why there is a need to continue funding:

Due to several factors, including escalating numbers of Food Pantry users. inflationary food costs, and ongoing economic struggles of our seniors, the provision by LCN of fresh, nutritious and healthy food is needed as much as ever.

12. If the previous project has been completed, did you submit your 2% report? ___✓___ YES ____ NO.

The 2% report must be submitted one year from the date you received your 2% award. If your report has not been submitted, <u>your current application will not be considered!</u> 2% Reports are mandatory for future grant considerations. Mail your 2% report to: Attn: 2% Reports; GTB, 2605 N.W. Bay Shore Drive, Peshawbestown, MI 49682.

13. Impact of Gaming on local program: (e.g., increase in student population, resulting from increase in Tribal employment or increase in emergency services to Casino patrons).

There are many wage earners in Leelanau County who struggle with food insecurity, including some in the Gaming industry who can no longer afford to feed their families due to inflation.

14. How will the success of the project be assessed (evaluation plan)?

100% of the grant funds will be used to purchase food for the Food Pantry. LCN maintains records of all costs and purchases of food during the year.

15. If new staff is required, will preference be given to Native American applicants?

___✓___ YES ____ NO

16. Budget: Please attach a one-page itemization of the planned budget. Include explanation for each category of the budget.

<u>IMPORTANT!! BEFORE YOU MAIL YOUR 2% APPLICATION, PLEASE REMEMBER TO:</u>

1) Execute authorized signature on first page, question #2.
2) Attach 1-page budget
3) Attach Parent Committee Certification Form if application is from an Indian Education/Title VII Program.
3) Submit by appropriate deadline**:**
   - **<u>If for June cycle, postmarked by May 31st.</u>**
   - **<u>If for December cycle, postmarked by November 30th.</u>**

Mail completed 2% applications to:

Attention: 2% Program
Grand Traverse Band of Ottawa and Chippewa Indians
2605 N.W. Bay Shore Drive
Peshawbestown, MI 49682

If you have any questions, please call 231-534-7601.

Grand Traverse Band of Ottawa and Chippewa Indians 2% Indian Education Parent Committee Certification Form

Instructions: By filling out this form, you are certifying that only one 2% application is being submitted for your school district's Indian Education/Title VII program.

We affirm that we have participated in providing information regarding the content of this 2% application for the Grand Traverse Band of Ottawa and Chippewa Indians (GTB).

We affirm that previous 2% reports have been submitted to GTB for 2% funding that this school district has received from GTB.

As current members of this school district's Parent Committee for the Indian Education Program/Title VII, we approve of and certify that this 2% application is being submitted on behalf of the _____ School District.
(Name of school district)

Print Name	Sign Name	Date
Print Name	Sign Name	Date
Print Name	Sign Name	Date
Print Name	Sign Name	Date
Print Name	Sign Name	Date
Print Name	Sign Name	Date

Application Notes

Item 10. Prior awards through the Tribe's 2% funding allocation.

Awards to Food Pantry:

July 1, 2008 - June 30, 2009	$10,000
January 1, 2010 – December 31, 2010	$16,000
January 1, 2011 – December 31, 2011	$13,000
January 1, 2012 – December 31, 2012	$14,500
January 1, 2013 – December 31, 2013	$25,000
January 1, 2014 – December 31, 2014	$18,988

Awards to NAM (Neighborhood Assistance Ministry):

July 1, 2007 - June 30, 2008	$10,000
July 1, 2008 - June 30, 2009	$15,000
July 1, 2009 - June 30, 2010	$15,000
July 1, 2010 - June 30, 2011	$15,000
July 1, 2011 - June 30, 2012	$15,904
July 1, 2012 - June 30, 2013	$10,000
July 1, 2013 - June 30, 2014	$14,871
July 1, 2014 - June 30, 2015	$10,010
July 1, 2016 - June 30, 2017	$10,000

Awards to Senior Assistance Portion of Food Pantry and NAM:

July 1, 2015 - June 30, 2016	$20,000
April 1, 2017 - March 31, 2018	$20,000
January 1, 2022 – December 31, 2022	$20,000

Awards to Senior Assistance Portion of Food Pantry:

January 1, 2021 – December 31, 2021	$20,600
January 1, 2023 – December 31, 2023	$18,040

Awards to Needs of Children Portion of Food Pantry, Baby Pantry, and Blessings in a Backpack:

January 1, 2016 – December 31, 2016	$22,000
July 1, 2018 – June 30, 2019	$15,000
January 1, 2020 – December 31, 2020	$15,000

Item 5. Target Population Numbers:

Native American families reporting ethnicity to the LCN Food Pantry as of August 2023 stand at 21%, which is a 4% increase over the same statistic from the same time last year in 2022. Exact percentages are hard to quantify, as the reporting is typically reported by (and on) heads of households, and may not reflect the accurate ethnicity of all family members. All LCN programs are fully available to GTB members at any time. Based on prior numbers, approximately 32% of Food Pantry users are in the Senior population.

Item 15. If New Staff is required, will preference be given to Native American applicants?

Yes. LCN is primarily a volunteer organization and welcomes Native American Volunteers. Likewise, when new staff is required, it welcomes all applicants, including Native Americans.

Application Notes

Item 16. Budget:

Planned Budget

Funding Request for LCN Food Pantry

	Food Pantry
Total 2023 Budget	**$136,000**
%age of Senior Usage	**32%**
Total Budget for Seniors	**$43,520**
Requested 25% of Budget	**$34,000**

EXECUTIVE DOCUMENT SUMMARY

Department: Solid Waste Council

Contact Person: Trudy Galla

Telephone Number: 231-256-9812

Submittal Dates

☑ Select Meeting Type: Executive Board

Date of Meeting: 11/14/2023

Financial/Source Selection Method

☑ Select One: Grant

☐ Other:

☐ *Account No.:*

☐ *CIP Project?*

☐ *If Grant, Match Account No.:*

Vendor: Grand Traverse Band

Address/
Phone:

Description: 2% Allocation Request/Agr.

Budgeted Amount: $ 8,000.00 Contracted Amount: $ 5,000.00

Document Description

☐ **Request to Waive Board Policy on Bid Requirements** ☐ **Department Head/Elected Official Authorization**

This request is for submittal of a 2% allocation application for mattress recycling. The county's mattress recycling events have been very successful, and to date, have collected nearly 400 mattresses for recycling. Our office continues to receive phone calls from homeowners wishing to take part in another mattress recycling collection. For 2024, two (2) collections are being planned, with one of the collections scheduled in Peshawbestown.

The company handling the mattress recycling is Bay Area Recycling for Communities (BARC).

Suggested Recommendation:

Motion to recommend that the County Board of Commissioners approve the Solid Waste Council's 2% allocation request to fund mattress recycling, in the amount of $5,000.00.

Department Approval: Trudy J Galla Date: 11/03/2023

Tribal Council Allocation of 2% Funds
Application Form

PLEASE NOTE:

Under the terms of the consent decree, which settled *Tribes v. Engler* (Case No. 1:90-CV-611, U.S. Dist. Ct., West. Dist. Mich.), the Grand Traverse Band of Ottawa and Chippewa Indians, as defined in the stipulation, has agreed to pay 2% of its video gaming revenue to local units of government (i.e., local township, village, city, county board of commissioners, public school system).

***ONLY APPPLICATIONS FROM LOCAL UNITS OF GOVERNMENT LOCATED WITHIN GTB'S 6-COUNTY SERVICE AREA WILL BE CONSIDERED FOR 2% FUNDING**

1. Allocation Cycle: _____JUNE – New submission date, Postmarked by **MAY 31st**

_XX__DECEMBER – New submission date, Postmarked by **NOVEMBER 30th**

2. Name of Applicant: Leelanau County / Leelanau County Solid Waste Council

Address: 8527 E. Government Center Dr., Suite 108 Suttons Bay MI 49682

Phone #: 231-256-9711 Fax #: 231-256-0120

Printed Name: Ty Wessell, Chairman

- **Authorized Signature:** _____
  (Signature of local unit of government official; e.g., county/city official, township supervisor, village president, college president, school superintendent)

Title: Chairman, Leelanau County Board of Commissioners

E-mail address: dallen@leelanau.gov

Printed Name of contact person: Trudy Galla, Planning Director

Telephone #: 231-256-9812 Fax #: 231-256-0174

E-mail address: tgalla@leelanau.gov

3. Type of Applicant:

_____	Local Government	_____ Local Court
_____ Township	__X__ County Commissioner	_____ Road Commission
_____ Public School District	_____ College	_____ Charter School
_____ Public Library	_____ Sheriff/Police Department	_____ Fire Department

_____ 501c3 applying through local unit of government (name): _____

4. Fiscal Data: Amount Requested: $ 5,000.00 Percent: 6 2 . 5 %

Local Leveraging: $ 3,000.00 Percent: 37.5%
(Match)
Total Budget: $ 8,000.00 Percent: 100 %

5. Target Population numbers: X Children X Adults X Elders

(Indicate the number of GTB members) X Total GTB member Community _____Others

6. Counties Impacted: _____Antrim _____Benzie _____Charlevoix
_____ Grand Traverse X Leelanau _____Manistee

7. Brief Description (purpose of funding); include statement of need:

There are a large number of mattresses abandoned, or stored in homes/barns in the county which can be collected and the material recycled. Mattresses are hard to dispose of and can often contain bodily fluids, bed bugs, and other stuff that can be considered a biohazard. More than 50,000 mattresses are discarded in the U.S. each day even though 75% of a mattress can be recycled. The old steel, foam, wood and other material can be used to create new products, which saves water, conserves energy and reduces greenhouse gas emission.[1] Leelanau County residents currently have no environmentally friendly option for taking care of used mattresses. And many organizations will not accept mattresses to be resold or given away, due to health and sanitary conditions.

Since its first mattress cleanup event in 2022, the Solid Waste Council has collected close to 400 mattresses for recycling. The Solid Waste Council proposes holding two (2) collection events in 2024. This 2% allocation request is for $5,000. A small fee per mattress paid by residents, will be used as a match. This event will have a "cap" on the number of mattresses brought to the event, and the small fee for each mattress collected will help offset some of the costs involved. The total estimated cost for two events is approximately $8,000.00

Leelanau County has contracted with Bay Area Recycling for Charities (BARC) for mattress recycling including the collection, loading, and hauling of the materials to a facility and then recycling them. Leelanau County will manage the promotion and participation of the event. The county will be holding a Tire & Mattress Recycling Collection in Peshawbestown on October 11, 2024, from 4-7 p.m.

This 2% allocation request is consistent with the activities of the Solid Waste Council.

[1] www.mattressrecyclingcouncil.org

8. This question only pertains to Indian Education Programs of Public School Systems. If you are not an Indian Education Program of a Public School system, skip to question 9.

(a) **Program formula: (1) $5,000, up to $10,000 per school district + (<u>$1,000, up to $1,500</u> x # of GTB member students) = allocation. The increase to the formula will be determined by the previous timely 2% report received, and the data provided within the report on the success of the school's Indian Education Program as a result of the 2% allocation.**

<u>Please note</u>: 1) In completing this section, only provide the student numbers of currently enrolled GTB members; do not include the general Native American data of your school system; and 2) there will be a cap of $100,000, up to $125,000 per school, based on the school's GTB membership count and data provided within the 2% report received from the previous year.

(b) Recommendation from Parent Committee: _____YES _____NO

<u>Please have the Parent Committee sign the attached Certification Form.</u>

(c) Describe parent involvement in project: _____

_____

(d) Does the school receive Title VII Indian Education Funds?_____YES _

_____NO If yes, how much: _____

9. What are the start and completion dates of the proposed project? Start Spring 2024

Completion December 31, 2024

10. Has applicant received prior awards through the Tribe's 2% funding allocation?

__X__YES _____NO. If yes, please list the start and end dates and amount:

December 2023 - June 2023 $5,00 mattress, $10,00 tires
December 2021 - June 2022 $6,000 mattress, and $10,000 tires
December 2020 - June 2021 and amounts: $10,000
December 2019 - June 2020 and amounts: $ 6,500
December 2018 - June 2020 and amounts: $ 14,261
December 2010 - June 2011 and amounts: $ 20,000
June 2006 - December 2007 and amounts: $ 18,000
December 2005 - December 2007 and amounts: $ 16,900
June 2005 - December 2006 and amounts: $ 34,500
June 2006 - December 2007 and amounts: $ 8,000
December 2003 - June 2004 and amounts: $ 20,000
June 2001 - December 2002 and amounts: $ 27,500
December 2000 - June 2001 and amounts: $ 10,000

December 1999 - June 2000 and amounts: $ 7,200

11. Is the proposed project new X or a continuation project ____?

If this is a continuation project, please explain why there is a need to continue funding:

12. If the previous project has been completed, did you submit your 2% report? X YES _____NO.
The 2% report must be submitted one year from the date you received your 2% award. If your report has not been submitted, your current application will not be considered! 2% Reports are mandatory for future grant considerations. Mail your 2% report to: Attn: 2% Reports; GTB, 2605 N.W. Bay Shore Drive, Peshawbestown, MI 49682.

13. Impact of Gaming on local program: (e.g., increase in student population, resulting from increase in Tribal employment or increase in emergency services to Casino patrons).

Gaming should not have a direct impact on the proposed mattress recycling program, as the collection will be designed primarily for use by households.

14. How will the success of the project be assessed (evaluation plan)? _____

The success will be measured by the number of mattresses collected for recycling. Leelanau County and the Contractors will record volumes. We will also gauge residents' interest in doing additional mattress recycling collections.

15. If new staff is required, will preference be given to Native American applicants?

_____ YES _____NO

It is not anticipated new staff will be required. If staff is required, the county will follow its **Equal Opportunity Employer** policy for any new hires.

16. Budget: Please attach a one-page itemization of the planned budget. Include explanation for each category of the budget.

IMPORTANT!! BEFORE YOU MAIL YOUR 2% APPLICATION, PLEASE REMEMBER TO:

1) Execute authorized signature on first page, question #2.
2) Attach 1-page budget
3) Attach Parent Committee Certification Form if application is from an Indian Education/Title VII Program.
3) Submit by appropriate deadline**:**
   - **If for June cycle, postmarked by May 31st.**
   - **If for December cycle, postmarked by November 30th.**

Mail completed 2% applications to:
Attention: 2% Program
Grand Traverse Band of Ottawa and Chippewa Indians 2605
N.W. Bay Shore Drive
Peshawbestown, MI 49682

If you have any questions, please call 231-534-7601.

Grand Traverse Band of Ottawa and Chippewa Indians 2% Indian Education Parent Committee Certification Form

Instructions: By filling out this form, you are certifying that only one 2% application is being submitted for your school district's Indian Education/Title VII program.

We affirm that we have participated in providing information regarding the content of this 2% application for the Grand Traverse Band of Ottawa and Chippewa Indians (GTB).

We affirm that previous 2% reports have been submitted to GTB for 2% funding that this school district has received from GTB.

As current members of this school district's Parent Committee for the Indian Education Program/Title VII, we approve of and certify that this 2% application is being submitted on behalf of the _____ School District.
(Name of school district)

Print Name	Sign Name	Date

Leelanau County

Proposed Budget – Mattress Recycling Collection

	COST	SOURCE	Percentage
MATCH FUNDS	Advertising, taking reservations (staff time), working event Owners – nominal fee per mattress	**County funds –** $ 1,000 **Mattress fee** - $2,000	**37.5%**
2% REQUESTED FUNDS	Portion of contractual costs for setup & collection at each event, and for transportation and recycling of mattresses	**2% -** $5,000	**62.5%**
GRAND TOTAL		**$8,000**	**100%**

***Note: County Funds will come from the recycling fund, as well as a fee per mattress collected from Leelanau County residents.**

EXECUTIVE DOCUMENT SUMMARY

Department: Solid Waste Council

Contact Person: Trudy Galla

Telephone Number: 231-256-9812

Submittal Dates

☑ Select Meeting Type: Executive Board

Date of Meeting: 11/14/2023

Financial/Source Selection Method

☑ Select One: Grant

☐ Other:

☐ *Account No.:*

☐ *CIP Project?*

☐ *If Grant, Match Account No.:*

Vendor: Grand Traverse Band

Address/
Phone:

Description: 2% Allocation Request/Agr.

Budgeted Amount: $ 20,000.00 Contracted Amount: $ 20,000.00

Document Description

☐ **Request to Waive Board Policy on Bid Requirements** ☐ **Department Head/Elected Official Authorization**

This request is for submittal of a 2% allocation application for tire recycling. Tire recycling collections have been ongoing in the county since 2019, and continue to to be very successful. There are still a lot more tires to collect and properly dispose of.

The company handling the tire recycling is ERG Environmental Services and two collections are being planned for 2024, with one collection held in Peshawbestown.

Suggested Recommendation:

Motion to recommend that the County Board of Commissioners approve the Solid Waste Council's 2% allocation request to fund tire recycling, in the amount of $10,000.00.

Department Approval: Trudy J. Galla Date: 11/03/2023

Tribal Council Allocation of 2% Funds
Application Form

PLEASE NOTE:

Under the terms of the consent decree, which settled *Tribes v. Engler* (Case No. 1:90-CV-611, U.S. Dist. Ct., West. Dist. Mich.), the Grand Traverse Band of Ottawa and Chippewa Indians, as defined in the stipulation, has agreed to pay 2% of its video gaming revenue to local units of government (i.e., local township, village, city, county board of commissioners, public school system).

***ONLY APPPLICATIONS FROM LOCAL UNITS OF GOVERNMENT LOCATED WITHIN GTB'S 6-COUNTY SERVICE AREA WILL BE CONSIDERED FOR 2% FUNDING**

1. Allocation Cycle: _____JUNE – New submission date, Postmarked by **MAY 31st**

__XX__DECEMBER – New submission date, Postmarked by **NOVEMBER 30th**

2. Name of Applicant: Leelanau County / Leelanau County Solid Waste Council

Address: 8527 E. Government Center Dr., Suite 108 Suttons Bay MI 49682

Phone #: 231-256-9711 Fax #: 231-256-0120

Printed Name: Ty Wessell

- **Authorized Signature:** _____
  (Signature of local unit of government official; e.g., county/city official, township supervisor, village president, college president, school superintendent)

Title: Chairman, Leelanau County Board of Commissioners

E-mail address: dallen@leelanau.gov

Printed Name of contact person: Trudy Galla, Planning Director

Telephone #: 231-256-9812 Fax #: 231-256-0174

E-mail address: tgalla@leelanau.gov

3. Type of Applicant:

	_____Local Government	_____Local Court
_____ Township	__X__County Commissioner	_____Road Commission
_____ Public School District	_____College	_____Charter School
_____ Public Library	_____Sheriff/Police Department	_____Fire Department

_____ 501c3 applying through local unit of government (name): _____

4. Fiscal Data: Amount Requested: $ 10,000 Percent: 50 %

Local Leveraging: (Match) $ 10,000 Percent: 50 %

Total Budget: $ 20,000 Percent: 100 %

5. Target Population numbers: X Children X Adults X Elders

(Indicate the number of GTB members) X Total GTB member Community _____Others

6. Counties Impacted: _____Antrim _____Benzie _____Charlevoix

_____ Grand Traverse X Leelanau _____Manistee

7. Brief Description (purpose of funding); include statement of need:

Leelanau County has held collections for households with ten or less scrap tires and 'large pile' scrap tire cleanups. The County, through the Solid Waste Council, would once again like to work with local municipalities and property owners to clean up these tires. This request is for $10,000. This request would supply match funds in the amount of $10,000 from: Solid Waste Council budget and a fee for each tire collected.

Removal of abandoned scrap tires from backyards, fields, barns, buildings, ditches, etc. helps decrease fire hazards and potential air contamination from fires, decrease diseases carried by mosquitoes which are attracted to standing water in the tires, protect ground and surface water, and improve the aesthetics of properties around the county

Since starting our scrap tire recycling collections in 2019, the county has been able to expand our collections from regular household collections to include the clean-up of large piles of tires. In 2023 the county held two regular scrap tire recycling events and collected 2000 tires. Numerous requests have been received from residents asking the county to continue these programs. In total, Leelanau County has been able to **collect over 14,000 scrap tires since 2019**. The county will be holding two (2) Tire & Mattress Recycling Collections in 2024, with one in Peshawbestown on October 11, 2024, from 4-7 p.m.

This 2% allocation request is consistent with the activities of the Solid Waste Council.

8. This question only pertains to Indian Education Programs of Public School Systems. If you are not an Indian Education Program of a Public School system, skip to question 9.

(a) **Program formula: (1) $5,000, up to $10,000 per school district + (<u>$1,000, up to $1,500</u> x # of GTB member students) = allocation. The increase to the formula will be determined by the previous timely 2% report received, and the data provided within the report on the success of the school's Indian Education Program as a result of the 2% allocation.**

<u>Please note</u>: 1) In completing this section, only provide the student numbers of currently enrolled GTB members; do not include the general Native American data of your school system; and 2) there will be a cap of $100,000, up to $125,000 per school, based on the school's GTB membership count and data provided within the 2% report received from the previous year.

(b) Recommendation from Parent Committee: _____YES _____NO

<u>Please have the Parent Committee sign the attached Certification Form.</u>

(c) Describe parent involvement in project: _____

_____

(d) Does the school receive Title VII Indian Education Funds?_____YES _

_____NO If yes, how much: _____

9. What are the start and completion dates of the proposed project? Start Spring 2024 Completion December 31, 2024

10. Has applicant received prior awards through the Tribe's 2% funding allocation?

__X__YES _____NO. If yes, please list the start and end dates and amount:

December 2023 - June 2023 $5,000 mattress, and $10,000 tires
December 2021 - June 2022 $6,000 mattress, and $10,000 tires
December 2020 - June 2021 and amounts: $10,000
December 2019 - June 2020 and amounts: $ 6,500
December 2018 - June 2020 and amounts: $ 14,261
December 2010 - June 2011 and amounts: $ 20,000
June 2006 - December 2007 and amounts: $ 18,000
December 2005 - December 2007 and amounts: $ 16,900
June 2005 - December 2006 and amounts: $ 34,500
June 2006 - December 2007 and amounts: $ 8,000
December 2003 - June 2004 and amounts: $ 20,000
June 2001 - December 2002 and amounts: $ 27,500
December 2000 - June 2001 and amounts: $ 10,000

December 1999 - June 2000 and amounts: $ 7,200

11. Is the proposed project new_____or a continuation project X ?

If this is a continuation project, please explain why there is a need to continue funding:

Leelanau County used 2% funds in 2023 to hold two regular scrap tire recycling events. The county has been successful in acquiring state grant funds for scrap tire recycling, but commercial and agricultural operations are not permitted to participate and tires are limited to 10 per vehicle due to scrap tire hauler licensing requirements. The county has a list of properties with large amounts of tires, and continues to get calls as residents become aware of these programs. There are still many tires in the county that need to be collected, and the county has received positive feedback from residents, along with requests to continue this program for large pile collections, as well as the annual drop-off event at a central location for smaller numbers of tires.

12. If the previous project has been completed, did you submit your 2% report?____X____YES _____NO.
The 2% report must be submitted one year from the date you received your 2% award. If your report has not been submitted, your current application will not be considered! 2% Reports are mandatory for future grant considerations. Mail your 2% report to: Attn: 2% Reports; GTB, 2605 N.W. Bay Shore Drive, Peshawbestown, MI 49682.

13. Impact of Gaming on local program: (e.g., increase in student population, resulting from increase in Tribal employment or increase in emergency services to Casino patrons).

Gaming may not have a direct impact on the proposed tire recycling program, however, additional visitors to the county does increase the likelihood for unused tires (flat tires, worn out tires, replacements), to be abandoned and left in our communities. The Road Commission has reported that they frequently pick up tires alongside the road, and tires are also left in our township and county parks.

14. How will the success of the project be assessed (evaluation plan)? _____

The success will be measured by the number of tires removed from properties in the county. In total, the county has removed over 14,000 tires and there are still more tires across the county to properly collect and dispose of.

15. If new staff is required, will preference be given to Native American applicants?

_____ YES _____NO

It is not anticipated new staff will be required. If staff is required, the county will follow its **Equal Opportunity Employer** policy for any new hires.

16. Budget: Please attach a one-page itemization of the planned budget. Include explanation for each category of the budget.

IMPORTANT!! BEFORE YOU MAIL YOUR 2% APPLICATION, PLEASE REMEMBER TO:

1) Execute authorized signature on first page, question #2.
2) Attach 1-page budget
3) Attach Parent Committee Certification Form if application is from an Indian Education/Title VII Program.
3) Submit by appropriate deadline**:**

- **If for June cycle, postmarked by May 31st.**
- **If for December cycle, postmarked by November 30th.**

Mail completed 2% applications to:

Attention: 2% Program
Grand Traverse Band of Ottawa and Chippewa Indians
2605 N.W. Bay Shore Drive
Peshawbestown, MI 49682

If you have any questions, please call 231-534-7601.

Grand Traverse Band of Ottawa and Chippewa Indians 2% Indian Education Parent Committee Certification Form

Instructions: By filling out this form, you are certifying that only one 2% application is being submitted for your school district's Indian Education/Title VII program.

We affirm that we have participated in providing information regarding the content of this 2% application for the Grand Traverse Band of Ottawa and Chippewa Indians (GTB).

We affirm that previous 2% reports have been submitted to GTB for 2% funding that this school district has received from GTB.

As current members of this school district's Parent Committee for the Indian Education Program/Title VII, we approve of and certify that this 2% application is being submitted on behalf of the _____ School District.
(Name of school district)

Print Name	Sign Name	Date

Leelanau County

Proposed Budget – 2023 Scrap Tire Recycling

	COST	SOURCE	Percentage
MATCH FUNDS	Advertising, taking reservations (staff time), portion of costs for setup & collection at event, and transportation and disposal of tires	**County funds –** $ 7,000	**35%**
MATCH FUNDS	Cost of $1.00/tire	**Owners** - $3,000 (estimated)	**15%**
2% REQUESTED FUNDS	Portion of costs for setup & collection at event, and for transportation and disposal of tires	**2% -** $10,000	**50%**
GRAND TOTAL		**$20,000**	**100%**

***Note: County Funds will come from the recycling fund. Owners will be required to pay a per tire fee, and also provide some labor toward hauling/loading tires on the semi-trailer for collection of large piles of tires.**

EXECUTIVE DOCUMENT SUMMARY

Department: Sheriff's Office	**Submittal Dates**
Contact Person: Undersheriff J. Kiessel	☑ Select Meeting Type: Executive Board
Telephone Number: 231-256-8602	Date of Meeting: 11/14/2023
Financial/Source Selection Method	Vendor: Lunghamer Ford
☑ Select One: Quotation	Address/ Phone: 1960 E. Main St. Owosso, MI 888-923-5383
☑ Other: Macomb County Contract Bid	
☑ *Account No.:* 2024 Motor Pool Fund	
☐ *CIP Project?*	
☐ *If Grant, Match Account No.:*	**Description:** Capital Purchase

Budgeted Amount: $ 159,995.82 Contracted Amount: $ 159,995.82

Document Description

☑ **Request to Waive Board Policy on Bid Requirements** ☑ **Department Head/Elected Official Authorization**

The Sheriff's Office requests to purchase three (3) Ford vehicles, two - (2) marked 2024 Ford Interceptor SUV patrol units and one new 2024 detective unmarked vehicle.

By ordering these vehicles now during a very slim window it allows us to hopefully have them in hand and outfitted for Agency use prior to the busy summer season. Even with the quote from the dealership, expected lead time for build and delivery is "30+ weeks from receipt of purchase order". This purchase will also coincide with the tentatively approved operational budget with final approval also scheduled for the Regular November session.

All of the new vehicles purchased will replace existing ones within the fleet. Replaced vehicles will be stripped and sold by the County via an auction to help offset some of the costs.

Two (2) 2024 Ford Police interceptor SUV ($47,256.00 apiece)	$94,512.00
One (1) 2024 Ford Explorer 4x4 Fleet (Civilian)	$42,583.00
Radio North - L.E. SUV Equipment - removal, install ($9,829.72 apiece)	$19,659.58
Radio North - Detective Equipment - removal, install	$1,541.34
Signplicity - Two (2) sets of graphics	$899.90
Troz Brothers - Graphics Installation	$200.00
Tiger Tough - 3 Drivers Seat Covers	$600.00
Quoted / Estimated Total	$159,995.82

Suggested Recommendation:

I move to recommend that the Leelanau County Board of Commissioners allow the Sheriff's Office to order two Ford Police Interceptor SUV's and one Ford Ford Explorer 4x4 fleet vehicle from Lunghamer Ford with the price not to exceed $137,895.00. Upon delivery in 2024, the Sheriff's Office is also approved to outfit the vehicles with the total cost not to exceed $22,100.82. Funds to come from the 2024 Motor Pool Fund.

Department Approval: Undersheriff James C. Kiessel Digitally signed by Undersheriff James C. Kiessel Date: 2023.10.30 09:48:49 -04'00' Date: 10/30/2023

Lunghamer Ford Of Owosso

June 23, 2023

Leelanau County Sheriff Department
Attn: Undersheriff James Kiessel
8525 E. Governmental Center Drive
Suttons Bay, MI 49682

Road Patrol

Dear Undersheriff James Kiessel:

Price on 2024 Vehicle State of Michigan Contract# 071B7700180 and Macomb County Contract# 21-18 Bid:

(3) 2024 Ford Police Interceptor Utility AWD in Black	**$47,256.00 ea**
Total Delivered Price	**$141,768.00**

Service Contract: 36,000 miles or 36 months factory bumper to bumper warranty and 100,000 miles or 60 months powertrain warranty.

Delivery date: Current lead time to order is estimated at 30 + weeks from receipt of Purchase Order.

Order Cutoff Date: Draft TBD.

Ford Motor Company does not guarantee delivery---Ford Motor Company will make reasonable efforts to schedule orders received prior to fleet order cut-off date.

Payment requirements: All departments to pay on delivery of vehicle. 10-day grace period will be given if previous arrangements have been made. An $8.00 per day floor plan will be charged if payment is not at the dealership within 10 days of delivery of the vehicle (s).
If you have any questions please call me, 888-92-Fleet (888-923-5338).

Respectfully Submitted,

Bill Campbell

Bill Campbell
Government & Fleet Sales

1960 E Main St Owosso, MI 48867, 888-92-FLEET (888.923.5338) Fax 517-625-5832

DRAFT PRICING
State of Michigan
2024 Utility Police Interceptor
Major Standard Equipment

MECHANICAL
- Axle Ratio – 3.73 (AWD)
- Brakes – 4-Wheel Heavy-Duty Disc w/H.D. Front and Rear Calipers
- Column Shifter
- DC/DC converter – 220-Amp (in lieu of alternator)
- Drivetrain – All-Wheel-Drive
- Electric Power-Assist Steering (EPAS) – Heavy-Duty
- Engine – 3.3L V6 Direct-Injection Hybrid Engine System
- Engine – 3.3L V6 Direct-Injection FFV with 10-Speed Automatic Transmission (136-MPH Top Speed)

Note: Deletes Regenerative Braking and Lithium-Ion Battery Pack; adds 250-Amp Alternator, replaces H7 AGM battery (800 CCA/80-amp) with H7 SLI battery (730 CCA/80-amp) and replaces 19-gallon tank with 21.4-gallon tank
- Engine – 3.0L V6 EcoBoost® with 10-Speed Automatic Transmission – (148-MPH Top Speed)

Note: Deletes Regenerative Braking and Lithium-Ion Battery Pack; adds 250-Amp Alternator, replaces H7 AGM battery (800 CCA/80-amp) with H7 SLI battery (730 CCA/80-amp) and replaces 19-gallon tank with 21.4-gallon tank)
- Engine Hour Idle Meter
- Engine Hour Meter
- Engine Oil Cooler
- Fuel Tank – 19-gallons
- H7 AGM Battery (800 CCA/80-amp)
- Lithium-Ion Battery Pack
- Suspension – independent front & rear
- Transmission – 10-speed automatic

EXTERIOR
- Antenna, Roof-mounted
- Cladding – Lower bodyside cladding MIC
- Door Handles – Black (MIC)
- Exhaust True Dual (down-turned)
- Front-Door-Lock Cylinders (Front Driver / Passenger / Liftgate)
- Glass – 2nd Row, Rear Quarter and Liftgate Privacy Glass
- Grille – Black (MIC)
- Headlamps – Automatic, LED Low-and-High-Beam

Note: Includes Front Headlamp / Police Interceptor Housing (with LED wig-wag feature)

— Pre-drilled hole for side marker police use, does not include LED strobe, but includes LED wig-wag functionality (eliminates need to drill housing assemblies and provides LED wig-wag feature)

— Pre-molded side warning LED holes with standard sealed capability (does not include LED installed lights)

— Wig-wag default is traditional ping-pong pattern; can be programmed to triple-burst pattern or ping-pong / triple-burst

Note: Must be wired to vehicle's light controller to enable wig-wag functionality; recommend Ready for the Road Package (67H) or Ultimate Wiring Package (67U)
- Liftgate – Manual 1-Piece – Fixed Glass w/Door-Lock Cylinder
- Mirrors – Black Caps (MIC), Power Electric Remote, Manual Folding with Integrated Spotter (integrated blind spot mirrors not included when equipped with BLIS®)
- Spare – Full size 18" Tire w/TPMS
- Spoiler – Painted Black
- Tailgate Handle – (MIC)
- Tail lamps – LED
- Tires – 255/60R18 A/S BSW
- Wheel-Lip Molding – Black (MIC)
- Wheels – 18" x 8.0 painted black steel with wheel hub cover
- Windshield – Acoustic Laminated

INTERIOR/COMFORT
- Cargo Hooks
- Climate Control – Dual-Zone Electronic Automatic Temperature Control (DEATC)
- Door-Locks

— Power

— Rear-Door Handles and Locks Operable
- Fixed Pedals (Driver Dead Pedal)
- Floor – Flooring – Heavy-Duty Thermoplastic Elastomer
- Glove Box – Locking/non-illuminated
- Grab Handles – (1 – Front-passenger side, 2-Rear)

INTERIOR/COMFORT (continued)
- Liftgate Release Switch located in overhead console (45 second timeout feature)
- Lighting

— Overhead Console

— Red/White Task Lighting in Overhead Console

— 3rd row overhead map light
- Mirror – Day/night Rear View
- Particulate Air Filter
- Powerpoints – (1) First Row
- Rear-door closeout panels
- Rear-window Defrost
- Scuff Plates – Front & Rear
- Seats

— 1st Row Police Grade Cloth Trim, Dual Front Buckets with reduced bolsters

— 1st Row – Driver 6-way Power track (fore/aft. Up/down, tilt with manual recline, 2-way manual lumbar)

— 1st Row – Passenger 2-way manual track (fore/aft. with manual recline)

— Built-in steel intrusion plates in both driver/passenger seatbacks

— 2nd Row Vinyl, 35/30/35 Split Bench Seat (manual fold-flat, no tumble) – fixed seat track
- Speed (Cruise) Control
- Speedometer – Calibrated (includes digital readout)
- Steering Wheel – Manual / Tilt / Telescoping, Urethane wheel finish w/Silver Painted Bezels with Speed Controls and 4-user configurable latching switches
- Sun visors, color-keyed, non-illuminated
- Universal Top Tray – Center of I/P for mounting aftermarket equipment
- Windows, Power, 1-touch Up/Down Front Driver/Passenger-Side with disable feature

SAFETY/SECURITY
- AdvanceTrac® w/RSC® (Roll Stability Control™)
- Airbags, dual-stage driver & front-passenger, side seat, passenger-side knee, Roll Curtain Airbags and Safety Canopy®
- Anti-Lock Brakes (ABS) with Traction Control
- Brakes – Police calibrated high-performance regenerative braking system
- Belt-Minder® (Front Driver / Passenger)
- Child-Safety Locks (capped)
- Individual Tire Pressure Monitoring System (TPMS)
- LATCH (Lower Anchors and Tethers for Children) system on rear outboard seat locations
- Rearview Camera with Washer viewable in 4.2" center stack.
- Seat Belts, Pretensioner/Energy-Management System w/adjustable height in 1st Row
- SOS Post-Crash Alert System™

FUNCTIONAL
- Audio

— AM/FM / MP3 Capable / Clock / 4-speakers

— Bluetooth® interface

— 4.2" Color LCD Screen Center-Stack "Smart Display"

Note: Standard radio does not include USB Port or Aux. Audio Input Jack; Aux. Audio Input Jack requires SYNC 3®
- Easy Fuel® Capless Fuel-Filler
- Ford Telematics™ – Includes Ford Modem and complimentary 2-year trial subscription
- Front door tether straps (driver/passenger)
- Power pigtail harness
- Recovery Hooks; two in front and trailer bar in rear
- Simple Fleet Key (w/o microchip, easy to replace; 4-keys)
- Two-way radio pre-wire
- Two (2) 50 amp battery ground circuits – power distribution junction block (behind 2nd row passenger seat floorboard)
- Wipers – Front Speed-Sensitive Intermittent; Rear Dual Speed Wiper Wipers – Front

WARRANTY
- 3 Year / 36,000 Miles Bumper / Bumper
- 8 Year / 100,000 Miles Hybrid Unique Components

POWERTRAIN CARE EXTENDED SERVICE PLAN
- 5-year/100,000-mile Powertrain CARE Extended Service Plan (zero deductible) – Standard

Police Interceptor Utility Base Prices

[x]	**Utility All Wheel Drive** (3.3L V6 Direct-Injection FFV, 136 MPH, 99B/44U) **K8A/500A**	**$44,591.00**
[ ]	**Utility All Wheel Drive** (3.0L V6 EcoBoost, 148 MPH, 99C/44U) **K8A/500A**	**$47,965.00**
[ ]	**Utility All Wheel Drive** (3.3L V6 Direct-Injection Hybrid Eng., 136 MPH, 99W/44B) **K8A/500A**	**$47,118.00**

VEHICLE COLOR: Order Code		Interior Trim Color Charcoal Black (96)
Arizona Beige Clearcoat Metallic	[E3]	[ ]
Medium Brown Metallic	[BU]	[ ]
Dark Toreador Red Clearcoat Metallic	[JL]	[ ]
Dark Blue	[LK]	[ ]
Royal Blue	[LM]	[ ]
Light Blue Metallic	[LN]	[ ]
Vermillion Red	[E4}	[ ]
Smokestone Clearcoat Metallic	[HG]	[ ]
Silver Grey Metallic	[TN]	[ ]
Iconic Silver Clearcoat Metallic	[JS]	[ ]
Agate Black	[UM]	[x]
Oxford White Clearcoat	[YZ]	[ ]
Blue Metallic	[FT]	[ ]
Sterling Grey Metallic	[UJ]	[ ]
Medium Titanium Clearcoat Metallic	[YG]	[ ]
Carbonized Grey	[M7]	[ ]

INTERCEPTOR OPTIONAL FEATURES:

Flooring/Seats	Code	$Cost
[ ] 1st and 2nd row carpet floor covering	16C	125.00
[ ] 2nd Row Cloth Seats	F6/ 88F	60.00
[ ] Power passenger seat (6-way) w/manual recline and lumbar	87P	325.00
[ ] Rear Console Plate (Not available with Interior Upgrade Pkg – 65U)	85R	45.00
[ ] Interior Upgrade Package	65U	390.00

- 1st and 2nd Row Carpet Floor Covering
- Cloth Seats – Rear
- Center Floor Console less shifter w/unique Police console finish plate
- Includes Console and Top Plate with 2 cup holders
- Floor Mats, front and rear (carpeted)
- Deletes the standard console mounting plate (85D)
- SYNC® 3
  - Enhanced Voice Recognition Communications and Entertainment System
  - 4.2" Color LCD Screen Center-Stack "Smart Display"
  - AppLink®
  - 911 Assist®

Note: SYNC® AppLink® lets you control some of your favorite compatible mobile apps with your voice. It is compatible with select smartphone platforms.

Lamps/Lighting		
[x] Dark Car Feature – Courtesy lamp disable when any door is opened	43D	20.00
[ ] Daytime Running Lamps	942	45.00
[x] Side Marker Lights in Skull Caps	63B	340.00
[ ] Rear Quarter Glass Side Marker Lights	63L	575.00
[ ] Front Warning Auxiliary Light (Driver side – Red / Passenger side – Blue)	21L/60A	600.00
[ ] Rear Auxiliary Liftgate Lights (Red/Blue LED Lights; located beneath liftgate glass in applique panel)	43A	395.00
[ ] Front Interior Windshield Warning Lights (Red/Blue with take down)	96W	1145.00
[ ] Rear Spoiler Traffic Warning Light	96T	1495.00
[ ] Dome Lamp – Red/White in Cargo Area	17T	50.00
[x] Pre-wiring for grille lamp, siren, and speaker	60A	50.00
[ ] Spot Lamp – Driver Only (LED Bulbs) (Unity)	51R	395.00
[ ] Spot Lamp – Driver Only (LED Bulbs) (Whelen)	51T	420.00
[x] Spot Lamp – Dual (driver and passenger) (LED Bulbs) (Unity)	51S	620.00
[ ] Spot Lamp – Dual (driver and passenger) (LED Bulbs) (Whelen)	51V	665.00

Body		
[ ] Glass – Solar Tint 2nd and 3rd Row (Deletes Privacy Glass)	92G	120.00
[ ] Glass – Solar Tint 2nd Row (Privacy Glass on Rear Quarter and Liftgate Window)	92R	85.00
[ ] Deflector Plate	76D	335.00
Wheels		
[ ] Wheel Covers (18" Full Face Wheel Cover)	65L	60.00
[ ] 18" Painted Aluminum Wheel	64E	475.00
Misc		
[ ] Engine Block Heater	41H	90.00
[ ] License Plate Bracket – Front	153	N/C
[ ] Badge Delete (Police Interceptor Badge Only)	16D	N/C
[ ] 100 Watt Siren/Speaker (includes bracket and pigtail)	18X	300.00
[ ] Aux Air Conditioning	17A	610.00
[x] Noise Suppression Bonds (Ground Straps)	**60R**	**100.00**
[ ] Low-Band Frequency Noise Suppression Kit (Recommended when Using two-way radio communication devices that operate in the 39 – 46 MHz range (Channels 1-9). Provides noise suppression for in-car two-way radio communication devices in the 39-46 MHz frequency range.	68E	195.00
[ ] OBD-II Split Connector – Allows up to 2 devices to be connected to the vehicle's OBD-II port	61B	55.00
[ ] My Speed Fleet Management	43S	60.00
Audio/Video		
[ ] Rear View Camera (Includes Electrochromic Rear View Mirror – Video is displayed in rear view mirror)	87R	N/C
Note: This option would replace the camera that comes standard in the 4" center stack area.		
[ ] Rear Camera On-Demand – allows driver to enable rear camera on-demand	19V	230.00
Doors/Windows		
[x] Global Lock / Unlock feature (Door-panel switches will lock/unlock all doors and rear liftgate. Eliminates the overhead console liftgate unlock switch) ***** OLD STYLE REAR HATCH LOCK / UNLOCK ***********	**18D**	**N/C**
[ ] Hidden Door Lock Plunger, Rear Door Handle and Rear Windows Inoperable	52P	160.00
[x] Rear Door Handles Inoperable/Locks Inoperable and Rear Windows Inop.	**68G**	**75.00**
[x] Lock system; Single Key/All Vehicles Keyed Alike	**59B**	**50.00**
Keyed Alike 1284x= 59B Keyed Alike 1294x= **59C** Keyed Alike 0135x= **59D** Keyed Alike 1435x= **59E** Keyed Alike 0576x= **59F** Keyed Alike 0151x= **59G** Keyed Alike 1111x= **59J**		
Safety & Security		
[ ] Ballistic Door Panels – Driver Front Door Only (Level 3)	90D	1585.00
[ ] Ballistic Door Panels – Driver & Pass Front Doors (Level 3)	90E	3170.00
[ ] Ballistic Door Panels – Driver Front Door Only (Level 4+)	90F	2415.00
[ ] Ballistic Door Panels – Driver & Pass Front Doors (Level 4+)	90G	4830.00
[ ] BLIS® – Blind Spot Monitoring with Cross Traffic Alert	55B/54Z	545.00
[ ] **Police Perimeter Alert** – detects motion in an approximately 270-degree radius on sides and back of vehicle; if movement is determined to be a threat, chime will sound at level I. Doors will lock and windows will automatically go up at level II. Includes visual display in instrument cluster with tracking.	68B	675.00
[ ] **Pre-Collision Assist with Pedestrian Detection** (includes Forward Collision Warning and Automatic Emergency Braking and unique disable switch for Law Enforcement use) **Note:** Not available with option 96W	76P	145.00
[x] Mirrors– Heated, Non BLIS	**549**	**60.00**
[ ] Lockable Gas Cap for Easy Fuel Capless Fuel-Filler	19L	20.00
[ ] Perimeter Anti-Theft Alarm – Activated by Hood, Door, or Decklid	593/55F	460.00
[ ] Remote Keyless Entry w/4 Key Fobs (w/o Keypad)	55F	340.00
[ ] Police Engine Idle Feature	47A	260.00
[ ] Extra Key $6.00x___=	Parts	6.00 ea
[ ] Remote Starter (Must Order Keyless Entry **55F**)	Parts	550.00
[ ] Reverse Sensing	76R	275.00
[ ] Class III Trailer Tow Lighting Package (4-pin and 7-pin connectors and wiring)	52T	80.00
[ ] H8 AGM Battery (900 CCA/92-amp)	19K	110.00
[ ] Gun Vault (Not Available with (17A) Aux Air Conditioning)	63V	245.00

[ ] 12.1" Integrated Computer Screen 47E 2745.00
- Includes 12.1" touchscreen display in center stack and allows for operation of laptop in remote location to free up cabin space in front passenger area
- Includes Audio Video extender (AVX) box, (2) AVX cables, (2) USB cables and (1) HDMI cable
- Includes SYNC 3 ®

[x] Front Headlamp Lighting Solution 66A 895.00
- Includes LED Low beam/High beam headlamp, Wig-wag function and Red/Blue/White LED side warning lights (driver's side White/Red / passenger side White/Blue)
- Includes pre-wire for grille LED lights, siren and speaker (60A)
- Wiring, LED lights included. Controller "not" included

Note: Not available with option: 67H
Note: Recommend using Ultimate Wiring Package (67U)

[ ] Police Wire Harness Connector Kit – Front/Rear 67V 185.00
For connectivity to Ford PI Package solutions includes:
- Front
  - (2) Male 4-pin connectors for siren
  - (5) Female 4-pin connectors for lighting/siren/speaker
  - (1) 4-pin IP connector for speakers
  - (1) 4-pin IP connector for siren controller connectivity
  - (1) 8-pin sealed connector
  - (1) 14-pin IP connector
- Rear
  - (2) Male 4-pin connectors for siren
  - (5) Female 4-pin connectors for lighting/siren/speaker
  - (1) 4-pin IP connector for speakers
  - (1) 4-pin IP connector for siren controller connectivity
  - (1) 8-pin sealed connector
  - (1) 14-pin IP connector

Note: Note:See Upfitters guide for further detail www.fordpoliceinterceptorupfit.com

[ ] Tail lamp/Police Interceptor Housing Only 86T 60.00
- Pre-existing holes with standard twist lock sealed capability (does not include LED Strobe lights) (eliminates need to drill housing assemblies)

Note: Not available with options: 66B and 67H

[ ] Tail Lamp Lighting Solution 66B 430.00
- Includes LED lights plus two (2) rear integrated hemispheric lighthead white LED side Warning lights in taillamps
- LED lights only. Wiring, controller "not" included

Note: Not available with option: 67H
Note: Recommend using Ultimate Wiring Package (67U)

[x] Rear Lighting Solution 66C 455.00
- Includes two (2) backlit flashing linear high-intensity LED lights (driver's side red / passenger side blue) mounted to inside liftgate glass
- Includes two (2) backlit flashing linear high-intensity LED lights (driver's side red / Passenger side blue) installed on inside lip of liftgate (lights activate when liftgate is open)
- LED lights only. Wiring, controller "not" included

Note: Not available with option: 67H
Note: LED lights only – does "not" include wiring or controller
Note: Recommend using Ultimate Wiring Package (67U)

[ ] Ultimate Wiring Package 67U 560.00
- Rear console mounting plate (85R) – contours through 2nd row; channel for wiring
- Pre-wiring for grille LED lights, siren and speaker (60A)
- Wiring harness I/P to rear cargo area (overlay)
  - Two (2) light cables – supports up to six (6) LED lights (engine compartment/grille)
  - One (1) 10-amp siren/speaker circuit engine cargo area
- Rear hatch/cargo area wiring – supports up to six (6) rear LED lights
- Does "not" include LED lights, side connectors or controller
  - Recommend Police Wire Harness Connector Kit 67V

Note: Not available with options: 65U, 67H

[ ] Ready for the Road Package All-in Complete Package 67H 3595.00

All-in Complete Package – Includes Police Interceptor Packages: 66A, 66B, 66C, plus

- Whelen Cencom Light Controller Head with dimmable backlight
- Whelen Cencom Relay Center / Siren / Amp w/Traffic Advisor control (mounted behind 2nd row seat)
- Light Controller / Relay Cencom Wiring (wiring harness) w/additional input/output pigtails
- High current pigtail
- Whelen Specific WECAN Cable (console to cargo area) connects Cencom to Control Head
- Pre-wiring for grille LED lights, siren and speaker (60A)
- Rear console plate (85R) – contours through 2nd row; channel for wiring
- Grille linear LED Lights (Red / Blue) and harness
- 100-Watt Siren / Speaker
- Hidden Door-Lock Plunger w/Rear-door controls inoperable (locks, handles and windows) (52P)

Note: Not available with options: 66A, 66B, 66C, 67U and 65U

Extended Warranty Option's ($0.00 Deductible) 100,000 Mile Coverage

[ ] 5-Year Premium Care Warranty (500 Plus Components Coverage) 2745.00

Total Price $47,256.00 ea

Lunghamer Ford Of Owosso

June 23, 2023

Leelanau County Sheriff Department
Attn: Undersheriff James Kiessel
8525 E. Governmental Center Drive
Suttons Bay, MI 49682

Detective

Dear Undersheriff James Kiessel:

Price on 2024 Vehicle State of Michigan Contract# 071B7700180 and Macomb County Contract# 21-18 Bid:

(2) 2024 Ford Explorer 4x4 XLT in Black	**$42,038.00 ea**
Total Delivered Price	**$84,076.00**

Standard Service Contract: 36,000 miles or 36 months factory Bumper to Bumper Warranty and 60,000miles 60 months Powertrain Warranty . Service to be handled by your local Ford Dealer.

Order Cutoff Date: DRAFT TBD.

Ford Motor Company does not guarantee delivery---Ford Motor Company will make reasonable efforts to schedule orders received prior to fleet order cut-off date.

Payment requirements: All departments to pay on delivery of vehicle. 10-day grace period will be given if previous arrangements have been made. A $9.50 per day floor plan will be charged if payment is not at the dealership within 10 days of delivery of the vehicle (s).

If you have any questions please call me, 888-92-FLEET (923-5338)

Respectfully Submitted,

Bill Campbell

Bill Campbell
Government & Fleet Sales

1960 E Main St Owosso, MI 48867, 888-92-FLEET (888.923.5338) Fax 517-625-5832

Draft Pricing

2023 Explorer RWD and 4x4 Fleet, 4-Door
Major Standard Equipment

MECHANICAL
- Electric Parking Brake
- Engine – 2.3L EcoBoost® I-4 with Auto Start-Stop Technology
- Four-Wheel Disc Brakes with Anti-Lock Brake System (ABS)
- Front Recovery Hook
- Standard-Duty Front and Rear Brake Calipers
- Transmission – 10-Speed Automatic

EXTERIOR
- 18.6 Gallon Fuel Tank
- Active Grille Shutters (Not available with the Fleet Only optional 3.3L Ti-VCT Engine on Base)
- Black – Molded-in-Color
  — Door Handles
  — Grille
  — Lower Bodyside Cladding
  — Wheellip Molding
- Body-Color
  — Bumpers, Front and Rear (Body-Color Upper, Black Lower)
  — Rear Spoiler
- Chrome Liftgate Appliqué
- Configurable Daytime Running Lamps (DRL) (Activates LED Low Beam Headlamps with Courtesy Delay)
- Easy Fuel® Capless Fuel Filler
- Front Air Curtain
- LED Taillamps with Amber Turn Signals
- Power Liftgate
- Privacy Glass – Second Row, Third Row and Liftgate
- Roof-Mounted Antenna
- Tires
  — P255/65R18 All-Season (A/S) BSW
  — Mini Spare
- Wheels – 18" Five-Spoke Sparkle Silver-Painted Aluminum
- Wipers
  — Windshield – Variable Intermittent/Continuous
  — Rear Window – Single-Speed Intermittent/Continuous

INTERIOR/COMFORT
- Center Floor Console – Front
  — Armrest
  — Storage Bin
- Climate Control
  — Cabin Particulate Air Filter
  — Tri-Zone Electronic Temperature Control
  — Rear Auxiliary Controls
- Cruise Control
- Cupholders – 10
- Door-Sill Scuff Plates, Front and Rear – Black Molded-in-Color (MIC), embossed with "EXPLORER"
- Driver and Front Passenger Seat Back Map Pockets
- Driver's Side Footrest
- Enhanced Interior Finishes
  — Satin Silver Twilight Color on Center Stack
  — High Gloss Black Color on Center Stack Buttons
- Floor Mats – Black Carpet, Front and Second Rows
- Grab Handles – Front-Passenger; Second Row – two (2), includes Coat Hooks
- Illuminated Visor Vanity Mirrors (Driver and Front Passenger)
- Instrument Panel Appliqués – Ebony
- Instrument Panel Cluster
  — 4.2" Color LCD Productivity Screen
  — Message Center
  — Outside Temperature Display
  — Trip Computer
- Lighting
  — Front Overhead Console Mounted Map Lights
  — Illuminated Entry System
  — Rear Cargo Area Light
  — Second and Third Row Dome Lights
- Locking Glove Box
- Overhead Console with Sunglasses Storage
- Powerpoints (12V) – five (5)
  — Front row; one (1) in Media Hub, one (1) in center console
  — Second row; two (2) in rear section of center console
  — Rear Cargo Area; one (1)
- Rotary Gear Shift Dial
- Seats
  — Cloth
  — Front Row Buckets
  — 8-way Power Driver's Seat (includes Power Recline)
  — 4-way Manual Front Passenger (includes Manual Recline)
  — Second Row – 40/20/40_Split-Fold-Flat and Reclining Outboard Seats (Manual fore/aft adjustable seat on "40" section only)
  — Third Row – 50/50 Split-Fold-Flat (Manual)
- Steering Column – Manual Tilt/Telescoping
- Steering Wheel with Mounted Features
  — 5-Way Controls
  — Audio Controls
  — Cruise Controls
- Windows, Power – Front and Rear. Front Row One-Touch-Up/Down Feature (door mounted controls).

SAFETY/SECURITY
- AdvanceTrac® with RSC® (Roll Stability Control™)
- Airbags
  — First Row: Driver and Passenger Dual-Stage Front, Front seat Side and Driver/Passenger Knee
  — All Rows: Safety Canopy® Side-Curtain with Rollover Sensor
- Center High-Mounted Stop Lamp (CHMSL)
- Curve Control
- Day/Night Rearview Mirror – Manually Adjustable
- Door Locks, Power
  — Auto lock/Auto unlock
  — Child-Safety Rear
- Head Restraints
  — Two-Way Manually Adjustable (Up/Down) All Rows. Second Row Center Head Restraint is fixed position)
- Headlamps
  — LED Low and High Beams with Courtesy Delay
  — Wiper-Activated
- Hooks
  — Cargo Net – Four (4)
  — Load Floor Tie-Down – Four (4)
- Individual Tire Pressure Monitoring System (ITPMS)
- LATCH (Lower Anchors and Tether Anchors for Children) on Second and Third Row Outboard Seating Positions
- Mirrors, Sideview – Power Glass, Manual-Folding and Black Molded-in-Color Caps
- MyKey®
- Personal Safety System™
- Rear-Window Defroster and Washer
- Safety Belts
  — Front Row – Belt-Minder® (Front Safety Belt Reminder)
  — Front Row – Adjustable Height
  — Second Row – Outboard and Center Seat Shoulder
  — Third Row – Outboard
- SecuriLock® Passive Anti-Theft System (PATS) (Explorer Base Series Only)
- SOS Post-Crash Alert System™

FORD CO-PILOT360 TECHNOLOGY
- Auto Hold
- Ford Co-Pilot360™
  — Auto High-Beam Headlamps
  — BLIS® (Blind Spot Information System) with Cross-Traffic Alert
  — Lane-Keeping System (includes Lane-Keeping Assist, Lane-Keeping Alert and Driver Alert)
  — Pre-Collision Assist with Automatic Emergency Braking (AEB) (Pedestrian Detection, Forward Collision Warning, Dynamic Brake Support)
  — Rear View Camera
- Headlamps – Autolamp (Automatic On/Off)
- Hill Descent Control™ (4X4 Only)
- Hill Start Assist
- Post-Collision Braking
- Reverse Sensing System
- Side-Wind Stabilization
- Trailer Sway Control

FUNCTIONAL
• 3.58 Non-Limited-Slip Rear Axle
• Audio
— AM/FM Stereo
— MP3 Capable
— Six (6) Speakers
— Speed-Compensated Volume
— SiriusXM® Radio
• Battery Saver
• Compass
• EcoCoach (efficient driving assistant)
• Electric Power-Assisted Steering (EPAS)
• Engine Oil Cooler
• FordPass Connect™
— 4G LTE Wi-Fi hotspot connects up to 10 devices
— Remotely start, lock and unlock vehicle
— Schedule specific times to remotely start vehicle
— Locate parked vehicle
— Check vehicle status

Note: Ford Telematics™and Data Services Prep included for Fleet
• Front and Rear Stabilizer Bars
• Independent Front and Rear Suspension
• Intelligent Oil-Life Monitor®
• Keyless-Entry Integrated Key Transmitter Remotes – Two (2)
• Regenerative Braking System
• SYNC® 3
— Enhanced Voice Recognition Communications and Entertainment System
— 8" LCD Capacitive Touchscreen in Center Stack with Swipe Capability
— Pinch-to-Zoom capability included when equipped with available Voice-Activated Touchscreen Navigation System (Navigation is included in the Ford Co-Pilot360™ Assist+(65S))
— Applink®
— 911 Assist®
— Apple CarPlay™ and Android Auto™ Compatibility
— USB Ports, First Row – One (1) "A" and (1) "C" in the Media Hub
4WD MODELS INCLUDE:
• Intelligent 4WD
• Terrain Management System™

[ ] Explorer RWD XLT Price K7D/200A $40,214.00
[x] Explorer 4x4 XLT Price K8D/200A $42,038.00

XLT Contains all Base Standard Items Plus:
EXTERIOR
• Door Handles – Body-Color t
• Grille – Black Mesh Insert with Chrome Bars
• LED Signature Lighting
• Lower Bodyside Cladding – Black with Chrome Accent
• Rear Bumper Step Pad – Molded-In-Color Black
• Roof-Rack Side Rails – Black with Black End Caps
INTERIOR/COMFORT
• Enhanced Interior Finishes on XLT Ebony Interior
— Light Slate Colored Uppers: Headliner, Overhead Console, Pillars, Grab Handles, Visors and Moonroof Shade
— Satin Silver Twilight Color on Center Stack, Steering Wheel Bezel, Instrument Panel Applique and Door Armrest Carrier
— High Gloss Black Color on Center Stack Buttons
• Enhanced interior finishes on XLT Sandstone Interior
— Satin Silver Twilight Color on Center Stack, Steering Wheel Bezel, Instrument Panel Applique and Door Armrest Carrier
— High Gloss Black Color on Center Stack Buttons
• Instrument Panel Cluster – 6.5" Color LCD Productivity Screen
• Interior Environments
— Ebony with Light Slate Uppers
— Sandstone
• Seats
— Unique Cloth
— 10-way Power Driver's)
— 4-way Power Passenger
— First Row Heated Seats
— Second Row Captain's Chairs with E-Z Entry, Armrests and Center Floor Console
• Steering Wheel – Leather-Wrapped with Paddle Shifters
SAFETY/SECURITY
_ Mirrors, Sideview – Power and Heated Glass, Manual-Folding, LED Turn Signal Indicators, Security Approach Lamps and Black Caps
• Perimeter Alarm
FUNCTIONAL
• 4-Door Intelligent Access (Lock/Unlock) with Push-Button Start
• USB Ports – One (1) "A" and One (1) "C" (replaces a Powerpoint 12V Port on the back side of the Front Console)

Explorer XLT Options

	Option Code	Price
[ ] XLT 202A Package	202A	3540.00

• 8-way Power Passenger Seats
• ActiveX Seating Material
• Heated Steering Wheel
• LED Fog Lamps with Skid Plate Elements, Front – Silver Painted
• Remote Start System
• SecuriCode Keyless Entry Keypad

[ ] XLT Technology Package (Available w/202A Only)	68D	2495.00

• 360-Degree Camera (with Split View)
• Audio: – B&O® Sound System by Bang & Olufsen®, 12 Speakers including Subwoofer
• Auto-Dimming Rearview Mirror (Interior)
• Class IV Trailer Tow Package • Front Parking Sensors
• Grille – Black-Painted Mesh Insert with Chrome Bars
• Mirrors, Sideview – Power-Folding with Autofold, Power and Heated Glass, LED Turn Signal Indicators, Security Approach Lamps, Driver/Passenger Side Gloss Black Caps
• Universal Garage Door Opener (UGDO)
• Wireless Charging Pad

[ ] **Ford Co-Pilot360™ Assist+ Package (Available w/202A Only)** • Adaptive Cruise Control with – Stop-and-Go – Lane Centering • Evasive Steering Assist • Voice-Activated Touchscreen Navigation System with Pinch-to-Zoom Capability, SiriusXM Traffic and Travel Link	65S	995.00
[X] **Trailer Tow Package Class IV**	52T	545.00
[ ] **Cargo Management System** • Cargo Net • Cargo Well Rubber Mat • Reversible Load Floor	21F	165.00
[x] **Auto Start-Stop Removal**	52X	N/C
[ ] Twin Panel Moonroof (Available w/202A Only)	439	1695.00
[ ] 20" Premium Painted Aluminum Wheels (Available only w/202A)	649	1295.00
[ ] Seats- Second Row 35/30/35 Bench with E-Z Entry and Armrest	17U	N/C
[ ] Floor Liners, Front and Second Rows	16B	200.00
[ ] Engine Block Heater	41H	90.00
[ ] License Plate Bracket Front	153	N/C
[ ] Daytime Running Lights	942	45.00
[ ] Remote Starter (Included in 202A Package)	Parts	550.00
[ ] Extra keys with Integrated Keyless Entry ____@ $275.00 ea =_____	SIG	_____

2023 Explorer XLT Colors

Exterior Colors		**Interior Colors**	
		Ebony (86/S6)	Sandstone (8N/SN)
Oxford White	[YZ]	[ ]	[ ]
Agate Black	[UM]	[x]	[ ]
Iconic Silver Metallic	[JS]	[ ]	[ ]
Carbonized Gray Metallic	[M7]	[ ]	[ ]
Forged Green Metallic	[L9]	[ ]	[ ]
Atlas Blue Metallic	[B3]	[ ]	[ ]
Extra Cost Paint ($495.00)			
Rapid Red Metallic Tinted CC	[D4]	[ ]	[ ]
Stone Blue Metallic	[C8]	[ ]	[ ]
Jewel Red Metallic Tinted CC	[C9]	[ ]	[ ]
Extra Cost Paint ($795.00)			
Star White Metallic Tri-coat	[AZ]	[ ]	[ ]

Name:	
Company:	Leelanau County Sheriffs
Address:	8525 E Government Center Dr
City, State, Zip:	Suttons Bay, MI 49682
Phone:	231-256-8800
Fax:	
Email:	

RADIO NORTH, LLC

955 E. Commerce Dr. Suite A
Traverse City, MI 49686
800-274-8255

231-929-2934 PH — Date: 30-Jun-23

231-929-4580 FX — Agent: Rick Wells

2024 Utility Installs

Line Item	Qty	Description	List Price	Your Cost	Total
1	3	REAR SPOILER SPLIT BAR RED/BLUE	$ 1,661.75	$ 1,329.40	$ 3,988.20
2	3	NFORCE WINDSHEILD SHROUD DRIVER SIDE	$ 160.18	$ 128.14	$ 384.43
3	3	NFORCE WINDSHEILD SHROUD PASSENGER SIDE	$ 160.18	$ 128.14	$ 384.43
4	3	WINDSHEILD NFORCE MOUNTING BRACKETS DRIVER	$ 63.25	$ 50.60	$ 151.80
5	3	WINDSHEILD NFORCE MOUNTING BRACKETS PASS	$ 63.25	$ 50.60	$ 151.80
6	6	WINDOW SHROUD KIT FOR REAR SIDE WINDOWS	$ 20.54	$ 16.43	$ 98.57
7	3	UNDER MIRROR INTERSECTOR LIGHT RED	$ 262.04	$ 209.63	$ 628.89
8	3	UNDER MIRROR INTERSECTOR LIGHT BLUE	$ 262.04	$ 209.63	$ 628.89
9	3	REAR TAIL LIGHT FLASHER UNIT	$ 151.96	$ 121.57	$ 364.71
10	3	COMPOSITE SIREN SPEAKER	$ 319.54	$ 255.63	$ 766.89
11	6	4 INCH STUD MOUNT M POWER LIGHTS RED/BLUE	$ 201.25	$ 161.00	$ 966.00
12	6	3 INCH STUD MOUNT M POWER GRILLE LIGHTS R/B	$ 179.89	$ 143.91	$ 863.49
13	3	GUN LOFT	$ 1,640.00	$ 1,185.71	$ 3,557.14
14	3	PARTITION TRANSFER KIT	$ 523.21	$ 418.57	$ 1,255.71
15	3	REAR PARTITION	$ 773.75	$ 619.00	$ 1,857.00
16	3	GAMBER JOHNSON CONSOLE W/ ARMREST CUPHOLDER	$ 1,550.00	$ 1,240.00	$ 3,720.00
17	3	ANTENNA KIT	$ 133.93	$ 107.14	$ 321.43
18		**LABOR PER CAR FOR EACH CAR INCLUDES**	$ 3,375.00	$ 2,700.00	$ -
		UNINSTALATION OF EQUIPMENT FROM OLD CAR	$ -	$ -	$ -

Price includes shipping and programming of unit to customer specifications

Prices Reflected are Accurate as of 6/30/2023

Total:	$	20,089.37
Tax:	$	-
Labor:	$	8,100.00
Shipping:	$	1,300.00
Licensing:	$	-
Programming:		N/C
GRAND TOTAL:	$	29,489.37

-9929.79

Valid for: 30 Days — Terms: Net 30 Days

TERMS AND CONDITION OF SALE:
The undersigned does hereby agree to the purchase of items and or services as described in the above document. Radio North LLC. Will provide the above items and or services as described above for the price quoted and agreed upon by both parties as long as the product and or Scope of Work remains unchanged by both parties. Any change in the product and or Scope of Work will require a written agreement between the two parties to be enacted upon and may result in a change to the overall price of the product and or services being purchased.

Rick Wells
Radio North Representative

Puchasing Agent

6/30/2023
Date

Date

Name:	
Company:	Leelanau County Sheriffs Department
Address:	
City, State, Zip:	
Phone:	
Fax:	
Email:	

RADIO NORTH, LLC
955 E. Commerce Dr. Suite A
Traverse City, MI 49686
800-274-8255
231-929-2934 PH — Date: 30-Jun-23
231-929-4580 FX — Agent: Rick Wells

Jail Transport

Line Item	Qty	Description	List Price	Your Cost	Total
1	1	FRONT CAGE	$ 1,123.75	$ 899.00	$ 899.00
			$ -	$ -	$ -
2	1	HARDWARE KIT	$ 93.75	$ 75.00	$ 75.00
			$ -	$ -	$ -
			$ -	$ -	$ -
			$ -	$ -	$ -
			$ -	$ -	$ -
			$ -	$ -	$ -
			$ -	$ -	$ -
			$ -	$ -	$ -
			$ -	$ -	$ -
			$ -	$ -	$ -
			$ -	$ -	$ -
			$ -	$ -	$ -
			$ -	$ -	$ -
			$ -	$ -	$ -
			$ -	$ -	$ -
			$ -	$ -	$ -
			$ -	$ -	$ -
			$ -	$ -	$ -
			$ -	$ -	$ -

Price includes shipping and programming of unit to customer specifications

Valid for: 30 Days Terms: Net 30 Days

Total:	$	974.00
Tax:	$	-
Labor:	$	784.00
Shipping:	$	350.00
Licensing:	$	-
Programming:		N/C
GRAND TOTAL:	$	2,108.00

TERMS AND CONDITION OF SALE:
The undersigned does hereby agree to the purchase of items and or services as described in the above document. Radio North LLC. Will provide the above items and or services as described above for the price quoted and agreed upon by both parties as long as the product and or Scope of Work remains unchanged by both parties. Any change in the product and or Scope of Work will require a written agreement between the two parties to be enacted upon and may result in a change to the overall price of the product and or services being purchased.

Rick Wells
Radio North Representative

Puchasing Agent

6/30/2023
Date

Date

Name:	
Company:	Leelanau County Sheriffs Department
Address:	
City, State, Zip:	
Phone:	
Fax:	
Email:	

RADIO NORTH, LLC
955 E. Commerce Dr. Suite A
Traverse City, MI 49686
800-274-8255
231-929-2934 PH — Date: 30-Jun-23
231-929-4580 FX — Agent: Rick Wells

DETECTIVE UNIT

Line Item	*Qty*	*Description*	*List Price*	*Your Cost*	*Total*
1	4	SCREW IN LED LIGHTS	$ 136.36	$ 109.09	$ 436.34
			$ -	$ -	$ -
2	1	HARDWARE KIT	$ 93.75	$ 75.00	$ 75.00
			$ -	$ -	$ -
			$ -	$ -	$ -
			$ -	$ -	$ -
			$ -	$ -	$ -
			$ -	$ -	$ -
			$ -	$ -	$ -
			$ -	$ -	$ -
			$ -	$ -	$ -
			$ -	$ -	$ -
			$ -	$ -	$ -
			$ -	$ -	$ -
			$ -	$ -	$ -
			$ -	$ -	$ -
			$ -	$ -	$ -
			$ -	$ -	$ -
			$ -	$ -	$ -
			$ -	$ -	$ -
			$ -	$ -	$ -

Price includes shipping and programming of unit to customer specifications

Total:	$	511.34
Tax:	$	-
Labor:	$	980.00
Shipping:	$	50.00
Licensing:	$	-
Programming:		N/C
GRAND TOTAL:	$	1,541.34

Valid for: 30 Days Terms: Net 30 Days

TERMS AND CONDITION OF SALE:
The undersigned does hereby agree to the purchase of items and or services as described in the above document. Radio North LLC. Will provide the above items and or services as described above for the price quoted and agreed upon by both parties as long as the product and or Scope of Work remains unchanged by both parties. Any change in the product and or Scope of Work will require a written agreement between the two parties to be enacted upon and may result in a change to the overall price of the product and or services being purchased.

Rick Wells
Radio North Representative

Puchasing Agent

6/30/2023
Date

Date

James Kiessel

From: trozbros@centurytel.net
Sent: Tuesday, June 27, 2023 7:45 AM
To: James Kiessel
Subject: Re: 2024 Budget Quote

You are correct. 100.00 per car.

On Tue, 27 Jun, 2023 at 7:27 AM, James Kiessel <jkiessel@leelanau.gov> wrote:

To: trozbros@centurytel.net

Troz,

I'm working on my 2024 budget and the plan is to purchase three (3) new cars. Can you please get me a quote to apply the graphics? Based on current prices I would assume that it will be $100 a car for $300 total, but I want to make sure in case you have to raise your prices. I want to insure that I budget for next year correctly. Thanks. Let me know if you have any questions.

Undersheriff James Kiessel
Leelanau County Sheriff's Office
8525 E. Government Dr.
Suttons Bay, MI 49682

Office: 231-256-8800
Fax: 231-256-2611
Direct: 231-256-8602

Signplicity
1555 M-37 South Traverse City, MI 49685
Simon@signplicity.com
(231) 943-3800

www.signplicity.com

signplicity sign systems

Quote 7723

Patrol Vehicle Decal Set - QTY 4

SALES REP INFO
Kevin M. Vann
Director of Business Development
kevinv@signplicity.com
(231) 943-3800

QUOTE DATE
07/03/2023

QUOTE DUE DATE
07/03/2023

QUOTE EXPIRY DATE
08/03/2023

TERMS
75/25

ORDERED BY
Leelanau County Sheriff
8525 E Government Center Dr
Suttons Bay, MI 49682

CONTACT INFO
James Kiessel
jkiessel@leelanau.gov
(231) 866-1703

#	ITEM	QTY	UOM	U.PRICE	TOTAL (EXCL. TAX)	TAXABLE
1	**"LEELANAU SHERIFF" RTA - Cut Cast Vinyl** • Cut vinyl as per approved layout. • QTY 2 per vehicle. *Vinyl Color #1::* Reflective Gold *Vinyl Color #2::* N/A *Vinyl Color #3::* N/A *Vinyl Color #4::* N/A	8	Each	$175.00	$1,400.00	Y
2	**"PROTECTING PARADISE SINCE 1863" RTA - Cut Cast Vinyl** • Cut vinyl as per approved layout. • QTY 2 per vehicle. *Vinyl Color #1::* Reflective Gold *Vinyl Color #2::* N/A *Vinyl Color #3::* N/A *Vinyl Color #4::* N/A	8	Each	$25.00	$200.00	Y
3	**"SHERIFF PATROL" RTA - Cut Cast Vinyl** • Cut vinyl as per approved layout. • QTY 1 per vehicle. *Vinyl Color #1::* Reflective Gold *Vinyl Color #2::* N/A *Vinyl Color #3::* N/A *Vinyl Color #4::* N/A	4	Each	$35.00	$140.00	Y
4	**"45-XX" RTA - Cut Cast Vinyl** • Cut vinyl as per approved layout. • QTY 1 per vehicle. Height: 10 Inches *Vinyl Color #1::* Reflective Gold *Vinyl Color #2::* N/A	4	Each	$35.00	$140.00	Y

#	ITEM	QTY	UOM	U.PRICE	TOTAL (EXCL. TAX)	TAXABLE
	Vinyl Color #3:: N/A *Vinyl Color #4::* N/A					
5	**Set-Up**	1	Each	$150.00	$150.00	N

All quotes are valid for 60 days from date of quote. Any Design work is the property of Signplicity Sign Systems, Inc. until purchased by the client.
All orders are required to have a 75% deposit to put into production and balance due upon completion, unless prior arrangements were arranged.
By signing this quote you agree to the above terms and conditions.

Subtotal:	**$2,030.00**
Sales Tax (0%):	**$0**
Total:	**$2,030.00**

Downpayment (75.0 %) **$1,522.50**

SIGNATURE: **DATE:**

EXECUTIVE DOCUMENT SUMMARY

Department: Sheriff's Office

Contact Person: Lt. Roush

Telephone Number: 231-256-8603

Submittal Dates

☑ Select Meeting Type: Executive Board

Date of Meeting: 11/14/2023

Financial/Source Selection Method

☑ Select One: Quotation

☐ Other:

☑ *Account No.:* 225.351.970.000

☑ *CIP Project?*

☐ *If Grant, Match Account No.:*

Vendor: Stafford Smith

Address/ Phone: 400 West Front St.
Traverse City, MI 49684
231-946-5374

Description: Capital Purchase

Budgeted Amount: $ 0.00

Contracted Amount: $ 20,558.97

Document Description

☐ **Request to Waive Board Policy on Bid Requirements**

☑ **Department Head/Elected Official Authorization**

The Leelanau County Sheriff's Office/Jail requests to purchase a commercial-grade dishwasher for the jail kitchen. The current dishwasher is original to the jail (18 years old) and has reached the point where it is narrowly repairable. The current model is no longer manufactured,parts are becoming scarce, and fund expenditures to repair and maintain it are becoming more frequent. We believe it makes more financial sense to replace the dishwasher, as opposed to continuing to spend money to repair the current one. Theoretically, we should see similar long-life out of the new unit as we did with the original.

Three quotes were obtained from distributors throughout the State. Two of the three are from vendors in Ionia and Oak Park (closet to Northern Michigan). Stafford Smith out of Traverse City offered the lowest price quote for both the dishwasher itself, as well as installation. All 3 price quotes are noted below. The Stafford Smith quote is attached.

Stafford Smith, Traverse City - $20,558.97
Gold Star Products, Oak Park - $21,511.54
Douglas Equipment, Ionia - $20,825.43

Suggested Recommendation:

I move to recommend that the Leelanau County Board of Commissioners approve the Sheriff's Office to purchase a commercial dishwasher from Stafford Smith of Traverse City in the amount of $20,558.97; Funds to come from 225.351.970.000.

Department Approval: Lt. Todd Roush Digitally signed by Lt. Todd Roush Date: 2023.10.25 14:10:40 -04'00'

Date: 10/25/2023

Quote

09/14/2023

To:
Leelanau County Sheriff's Department
Duane Flaska
8525 East Government Center Dr.
Suttons Bay, MI 49682
231-256-8800 (Contact)

Project:
Leelanau County Sheriff's Dept. - Dish Machine
8525 East Government Center Dr.
Suttons Bay, MI 49682

From:
Stafford Smith, Inc.
Gary Brown
400 West Front St.
Traverse City, MI 49684
O: (231) 946-5374 ext. 5
C: (231) 590-8069

Due to the global supply chain issues and subsequent freight issues, Stafford Smith is not responsible for any unforeseen surcharges, price increases and other increases in cost after the order is placed. These costs will be passed along to the customer.

Item	Qty	Description	Sell	Sell Total
1	1 ea	**DISHWASHER, DOOR TYPE** Hobart Model No. AM16T-BASX-2 Dishwasher, door type, tall chamber (27”), high temp sanitizing, 208-240/60/3 (field convertible to single phase), 60 racks/hour, straight-thru or corner, digital controls, Sense-A-Temp™ booster, electric tank heat, pumped rinse, pumped drain, auto-fill, stainless steel tank, frame, doors & feet, sheet pan rack, cULus, NSF, ENERGY STAR®	$18,285.90	$18,285.90
	1 ea	Standard warranty - 1-Year parts, labor & travel time during normal working hours within the USA		
	1 ea	WWST-STARTUP1YES Startup by Factory Trained Technician - Confirmation of correct machine and utility installation; performance check to ensure machine is operating to factory specifications; adjustments as needed, and customer demo. For installations within 100 miles of a Hobart Service Office during normal business hours with appropriate notice; beyond 100 miles contact Hobart Service. See Hobart Service for complete details	$383.07	$383.07
	1 ea	NOTE: For water of 3-grains of hardness or more, Hobart suggests adding a water softener.		
			ITEM TOTAL:	**$18,668.97**
2	1 ea	**INSTALLATION** Hobart Service - TC Model No. INSTALLATION We propose to receive, deliver, and install (1) new Hobart AM15T dish machine	$1,890.00	$1,890.00
100	1 ea	**TAX NOT INCLUDED** Stafford-Smith, Inc. Model No. TAX NOT INCLUDED Due to varying State, County and City tax regulations, Stafford-Smith may not have included your tax obligation in the total amount quoted.		

Item	Qty	Description	Sell	Sell Total
		If tax was not priced on your quote the appropriate tax will be added at the time of invoicing. If you have questions, please feel free to contact us.		
			Subtotal	$20,558.97
			Total	$20,558.97

TERMS: Upon receipt of application for business account, signed quote/purchase order and review by the credit department, the down payment and terms will be established and shared with the customer and account executive. Stafford-Smith reserves the right to progress bill for equipment as needed. This includes items shipped by the manufacturer to Stafford-Smith for storage and is not conditional upon being installed, mechanically connected or operational. You are welcome to inspect all stored materials.

Stafford-Smith, Inc. shall retain security interest in all equipment, parts, small wares, accessories, attachments, additions, and any replacements of the above that have been installed, affixed to or used in connection with the items specified in this proposal until all amounts have been paid. Should the Buyer sell or otherwise dispose of such collateral in violation of the terms of this agreement, Stafford-Smith, Inc. retains an interest in the proceeds from such transactions. Buyer authorizes Stafford-Smith, Inc. to file a financing statement describing the collateral and a copy of this agreement and/or the credit application may be filed as a security agreement for granting a secured interest in Buyer's inventory and sales
proceeds thereof.

Past due amounts constitute a default and are subject to service charges of 1 ½% per month, collection costs, and attorney fees. Warranties are conditioned on your paying the full purchase price for the equipment.

In addition to non-payment, an act of default by the buyer will have occurred if the buyer fails to accept the order of goods or fails to perform any other covenants under this agreement. In the event of default, Stafford-Smith, Inc. may enter any business property and without breach of the peace take possession of any or all collateral and exercise our rights in the event of default of a secured party as specified under the Uniform Commercial Code. Should any disputes arise, Buyer also acknowledges and submits to jurisdiction in the State of Michigan and County of Kalamazoo.

Except as otherwise provided herein, this proposal does not include any applicable State or Federal taxes, any charge for electrical wiring or plumbing and is subject to acceptance by buyer and seller within thirty (30) days from the date of this quote and only in accordance with the terms stated.

When ordering drop-ship equipment, please be aware to inspect your order immediately upon receipt. You may request the driver wait, for a reasonable amount of time, while you inspect and they must comply to your request. If the driver refuses to wait, please
mark the receipt "driver not willing to wait" and contact Stafford-Smith within (48) hours in order for a claim to be filed. If there is damage, you may refuse or you can accept and note the damage. Please take photos, if possible, to assist in filing the claim. You must keep all original cartons, even if you accept the damage, so Stafford-Smith can pursue a freight claim on your behalf. Please send the bill of lading and any additional documentation to your Stafford-Smith representative.

If you don't have time to inspect when delivered, you have up to (48) hours to inspect and notify us

immediately if there is an issue so we can address the best way to handle the claim. If not notified within (48) hours, your claim may not be valid.

We have implemented a 3.0% surcharge on credit card transactions. As an alternative we also accept ACH, ECheck and wire transactions and you can pay directly from our website.

I agree to the terms hereof and offer to purchase described goods and services as proposed hereby.

Acceptance: _____ Date: _____

Printed Name: _____

Project Grand Total: $20,558.97

HOBART

Project _____

AIA # _____ SIS # _____

Item # _____ Quantity _____ C.S.I. Section 114000

COMMERCIAL DISHWASHERS

AM16 SERIES – AM16T-BASX TALL BASE ELECTRIC

AM16T-BASX TALL BASE ELECTRIC

High Temperature Door-Style Dishwashing Machine

SPECIFIER STATEMENT

Specified unit will be a Hobart AM16 Tall Base electric high temperature dishwashing machine. Features include 3-sided pillarless hood, NSF pot and pan rating for 2-, 4- & 6-minute cycles, 27" door opening, pumped drain, auto door start with auto fill, interchangeable stainless steel rinse arms and X-shaped wash arms, delime cycle, digital controls with service diagnostics, up to 60 racks per hour, .67 U.S. gallons per rack pumped final rinse.

1 year parts and labor warranty.

STANDARD FEATURES

- .67 gallons per rack pumped final rinse
- 60 racks per hour – hot water sanitizing
- Two stage filtration
- Pillarless opening
- 3-sided hood
- Single point electrical connection standard, field convertible to dual point connection
- 3 phase standard, field convertible to single phase
- Digital controls with status indicators
- Temperature and chemical lock outs (with Hobart equipped chemical pumps)
- Pumped drain
- Timed wash cycles for 1, 2, 4 or 6 minutes
- NSF pot and pan rating for 2-, 4- & 6- minute cycles
- Sense-A-Temp™ 70°F rise electric booster heater
- Self-draining, high efficiency wash pump with stainless steel impeller
- 27" door opening for 18" x 26" sheet pans or 60-quart mixing bowl
- Stainless steel drawn tank, tank shelf, chamber, trim panels, frame and feet
- Spring counterbalanced chamber with UHMW guides
- X-shaped revolving, interchangeable upper and lower anticlogging wash arms
- Revolving, interchangeable upper and lower rinse arms
- Slanted, self-locating, one-piece scrap screen and basket system
- Automatic fill
- Door actuated start
- AutoClean
- Vent fan control
- Service diagnostics
- Straight-through or corner installation
- Delime cycle with notification (field activated)
- Sheet pan rack

OPTIONS & ACCESSORIES (Available at extra cost)

- ❑ Peg, combination and wine rack
- ❑ Chemical pumps
- ❑ Splash shield for corner installations
- ❑ Flanged and seismic feet
- ❑ Water hammer arrestor kit
- ❑ Rapid fill kit
- ❑ Sink integration kit
  - Sink saddle & 3" leg extension
  - Sink rail kit
  - Fold down table
- ❑ Drain water tempering kit
- ❑ Prison package
- ❑ Marine package
- ❑ Pumped drain air gap kit

Approved by _____ Date _____ Approved by _____ Date _____

AM16T-BASX TALL BASE ELECTRIC

High Temperature
Door-Style Dishwashing Machine

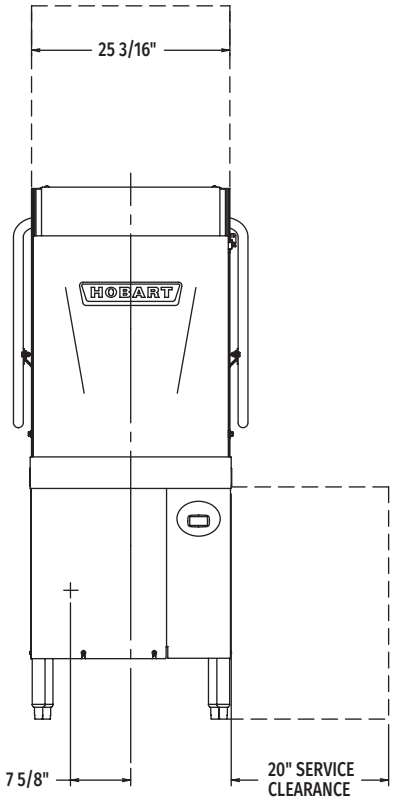

Front View

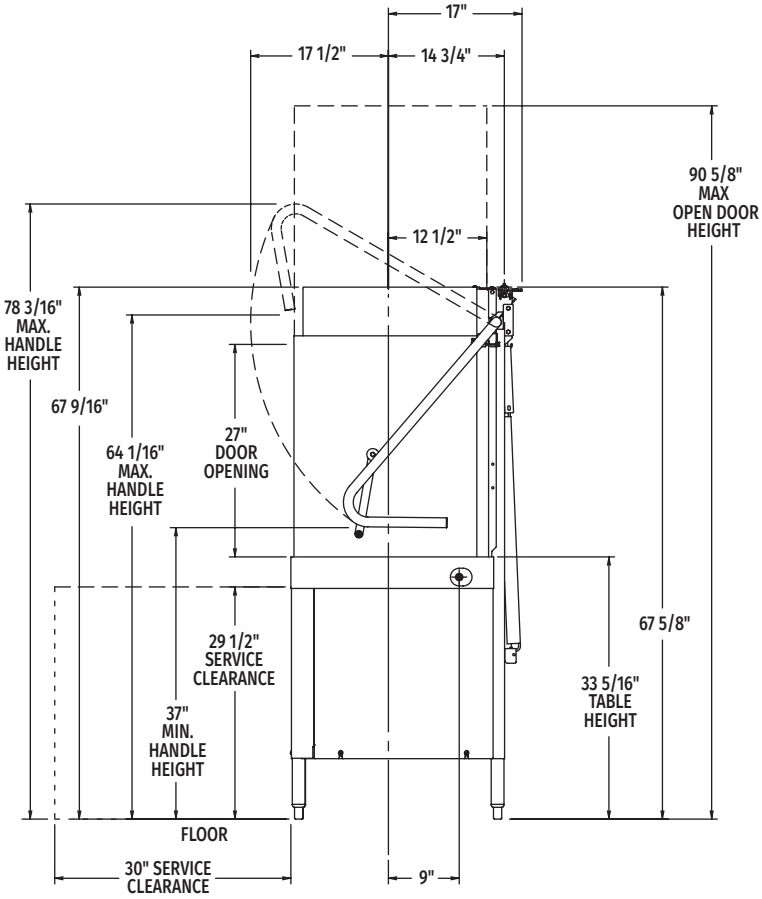

Right Side View

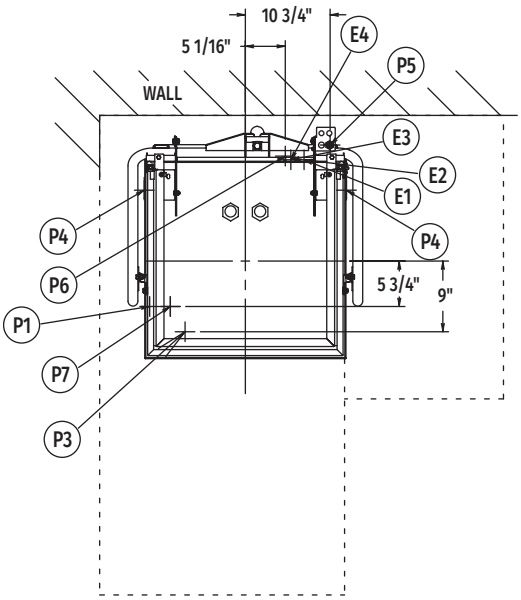

Top View

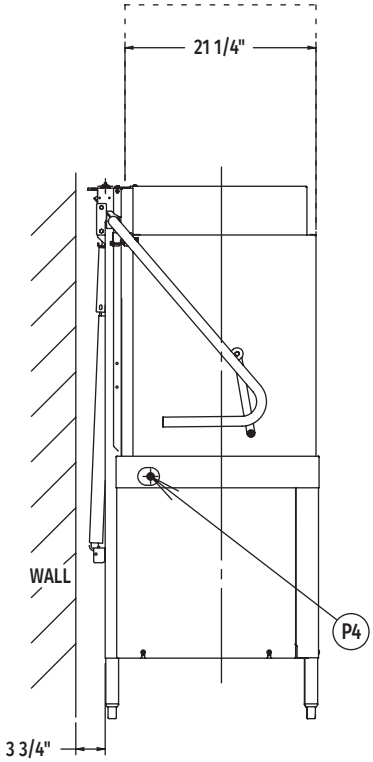

Left Side View

MODEL:
AM16T-BASX
00-563739

158

AM16T-BASX TALL BASE ELECTRIC

High Temperature Door-Style Dishwashing Machine

WARNING: Electrical and grounding connections must comply with the applicable portion of the National Electrical Code and/or other local electrical codes.

Plumbing connections must comply with applicable sanitary, safety, and plumbing codes.

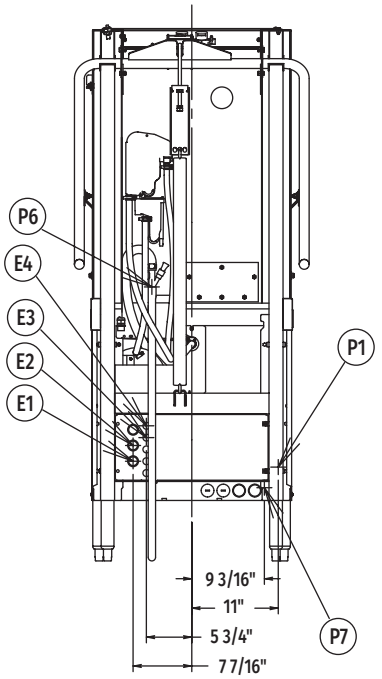

Rear View

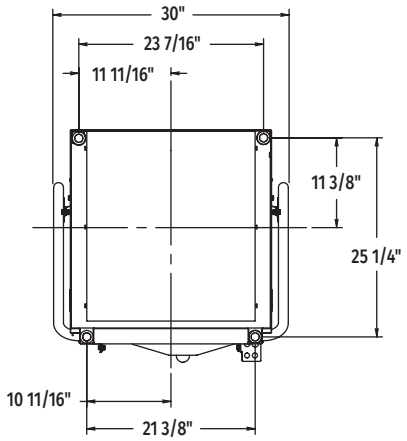

Bottom View

LEGEND

Electrical Connections	
E1	Electrical connection: wash pump motor & sump heater, 1" or 3/4" conduit hole; 12-11/16" AFF.
E2	Electrical connection: electric booster & controls only or single point electrical connection (3PH only) 1" or 3/4" conduit hole; 14-11/16" AFF.
E3	Electrical connection: detergent & rinse agent feeders, (DPS1 & DPS2) 1.5 amps @ nameplate supply voltage, (RPS1 & RPS2) 1.5 amps @ nameplate supply voltage; 1/2" conduit hole, 15-11/16" AFF.
E4	Electrical connection: vent fan control (VFC1 & VFC2) switching circuit only 1.5 amps @ nameplate supply voltage; 1/2" conduit hole, 17-3/16" AFF.
Plumbing Connections	
P1	Common water connection including booster heater: 110°F water minimum, 15-65 PSI recommended; 3/4" female garden hose fitting on 6' long hose supplied with machine; 11-15/16" AFF.
P3	Detergent probe sensor: remove cap and stud assembly to access 7/8" hole; 16-3/8" AFF.
P4	Detergent feeder: two locations available. Remove cap and stud assembly to access 7/8" hole; 30-3/4" AFF.
P5	Rinse agent feeder: remove 1/8" NPT pipe plug to access 1/8" NPT tapped hole; 67-5/8" AFF.
P6	Drain connection: 5/8" barb fitting with 6' long hose supplied with machine; 34-13/16" AFF. Maximum height 40" AFF.
P7	Optional – cold water connection: 55°F water minimum (drain water tempering - when ordered); 3/4" female garden hose fitting on 8' long hose; 9-5/16" AFF.

SPECIFICATIONS

Capacities

Racks Per Hour (maximum) 60
Dishes per Hour (average 25 per rack) 1,500
Glasses per Hour (average 45 per rack) 2,700
Wash Tank (U.S. gallons) 10.5

Motor Horsepower

Rinse Pump 0.18
Wash Pump 2
Drain Pump 0.21

Rinse

Gallons per Rack 0.67
Gallons per Hour (maximum consumption) 40.2

Peak Rate of Drain Flow

Gallons per Minute (initial rate with full tank) 18.5

Heating

Electric Booster (kW) 7.1
Electric Heating Unit (kW) 5.4

Exhaust Requirements . . . . . 450 CFM

Shipping Weight (approximate) . . . . . 357 lbs.

Crated Dimensions . . . . . 73.75"H x 36.5"W x 36.5"L

AM16T-BASX TALL BASE ELECTRIC

High Temperature Door-Style Dishwashing Machine

E1	AM16T-BASX with Electric Heat (TB2) (When Field Converted to Dual Point)		
Voltage	Rated Amps	Minimum Supply Circuit Ampacity	Maximum Protective Device
208-240/60/1	39.6	50	50
208-240/60/3	26.9	30	30
480/60/3	10.5	15	15
200-240/50/3*	22.1	30	30
380-415/50/3*	11.8	20	20

E2	9.5KW Electric Booster & Controls (TB1) (When Field Converted to Dual Point)		
Voltage	Rated Amps	Minimum Supply Circuit Ampacity	Maximum Protective Device
208-240/60/1	42.3	50	50
208-240/60/3	25.6	30	30
480/60/3	12.9	15	15
200-240/50/3*	25.6	30	30
380-415/50/3*	14.7	20	20

*These electrical specifications are not submitted for UL or CUL listing

E2	AM16T-BASX Single Point Electrical Service Connection as Shown Below		
Voltage	Rated Amps	Minimum Supply Circuit Ampacity	Maximum Protective Device
208-240/60/3	52.5	60	60
480/60/3	23.5	30	30
200-240/50/3*	47.7	60	60
380-415/50/3*	26.5	30	30

*These electrical specifications are not submitted for UL or CUL listing

Approximate Heat Gain to Space without Vent Hood	
Type	BTU/Hr.
Latent	12,300
Sensible	5,700

Miscellaneous Notes: All dimensions taken from floor line may increase 7/8" or decrease 3/8" depending on leg adjustment.

Vent hood (if required) to provide a minimum 450 CFM exhaust (ref installation instructions).

Net weight of machine including booster: 340 lbs.
Domestic shipping weight including booster: 360 lbs.

Size of racks – 19¾" x 19¾".

Plumbing Notes: Water hammer arrestor (meeting ASSE-1010 standard or equivalent) to be supplied (by others) in common water supply line at service connection.

Recommended water hardness to be 3 grains or less for best results.

Note: Electric heating unit & booster (kW) calculated at 208V.

Recommended building flowing water pressure to the dishwasher at or above 20 PSI. Pressures lower than 20 PSI may affect machine fill/start-up times.

This is a pumped rinse machine. Pressure regulating valve is not necessary on hot or cold lines.

For convenience when cleaning, water tap should be installed near machine with heavy duty hose and squeeze valve.

AM16T-BASX TABLING CONFIGURATIONS AND TRACK DESIGN

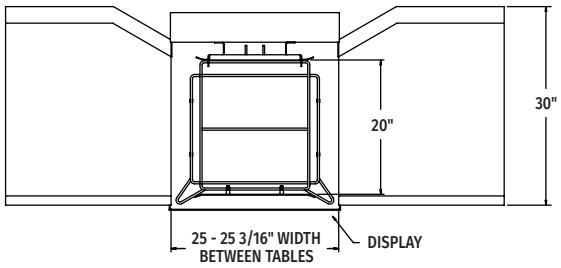

Pass Thru Installation

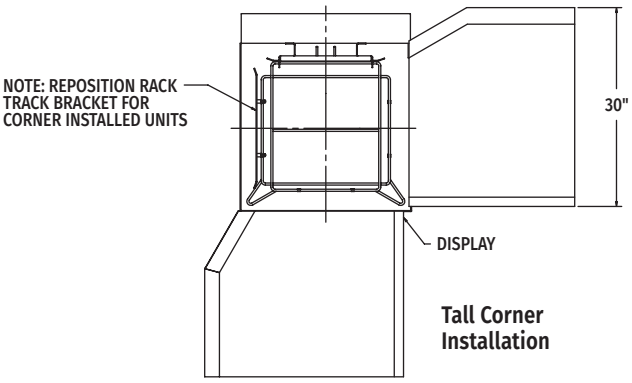

Tall Corner Installation

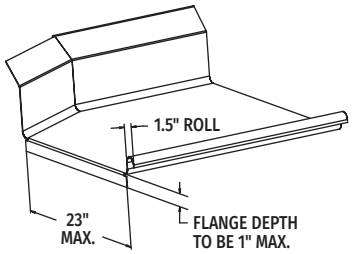

Suggested Table Design

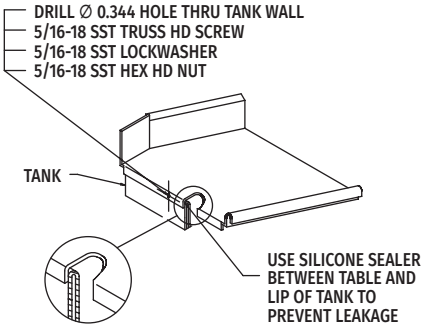

As continued product improvement is a policy of Hobart, specifications are subject to change without notice.

EXECUTIVE DOCUMENT SUMMARY

Department: Sheriff's Office	**Submittal Dates**
Contact Person: Undersheriff J. Kiessel	☐ Select Meeting Type: Executive Board
Telephone Number: 231-256-8602	Date of Meeting: 11/14/2023
Financial/Source Selection Method	Vendor: Michigan Municipal Risk
☐ Select One: Grant	Address/ Phone: 14001 Merriman Road Livonia, Michigan 48154
☐ Other:	
☑ *Account No.:* 225.301.960 / 225.301.860	
☐ *CIP Project?*	
☐ *If Grant, Match Account No.:*	**Description:** Grant Acceptance

Budgeted Amount: Contracted Amount:

Document Description

☐ **Request to Waive Board Policy on Bid Requirements** ☑ **Department Head/Elected Official Authorization**

In January of 2023, Sgt. Bosscher started the Michigan State University School of Staff and Command. The School ran through June of 2023 and consisted of 480 hours on in-person and on-line supervision leadership training. This school has been a staple of first-line supervisors within the Sheriff's Office for well over a decade. As part of the training, the Sheriff's Office uses funds from 101.225.301.860 (Travel) and 101.225.201.960 (Training) to cover the costs. As has been done in the past the Sheriff's Office submitted a RAP (Risk Avoidance Program) grant with MMRMA upon successful graduation by Sgt. Bosscher. The grant, when submitted reimburses the county for 50% of all tuition and travel related costs of the training. This years reimbursement / grant was awarded in the amount of $3,055.30. The Sheriff's Office asks that the Board of Commissioners accept the awarded grant money and place it back into the funds that originally funded the school.

It should be noted that this reimbursement award request from MMRMA has been semi-regular occurrence happening for well over the last decade. At no previous time has the Sheriff's Office presented to the Board of Commissioners to either make the reimbursement / grant request nor accept the funds when awarded or received. Recent clarifications related to these type of transactions by the new Finance Department was the reasoning behind this current request. All future requests of this nature will be presented to the Board of Commissioners for full approval.

Suggested Recommendation:

I move to recommend that the County Board of Commissioners approve the acceptance of a 2023 RAP (Rick Avoidance Program) Grant in the amount of $3055.30. With the funds to be placed back into funds 101.225.301.860 and 101.225.301.860 as reimbursement for Sergeant Bosscher attending the Michigan State University Staff and Command School January 2023 - June 2023.

Department Approval: Undersheriff James C. Kiessel Digitally signed by Undersheriff James C. Kiessel Date: 2023.10.17 09:23:56 -04'00' Date: 10/17/2023

RISK

MICHIGAN MUNICIPAL
RISK MANAGEMENT
AUTHORITY

October 9, 2023

Lt. Todd Roush
Leelanau County
8525 E. Government Center Dr.
Suttons Bay, MI 49682

RE: RAP

Dear Lt. Roush,

In accord with your RAP application and documentation for your Staff and Command project, I am pleased to enclose our payment in the amount of $3,055.30.

I commend Leelanau County and yourself for taking this risk management initiative.

Sincerely,

Cara Ceci/sp

Cara Ceci, ARM, CPCU
Member Resources Manager

CC/sp

cc: Deborah Allen
MMRMA Risk Manager

Enclosure

14001 Merriman Road • Livonia, MI 48154 • 734.513.0300 • 800.243.1324 • FAX 734.513.0318 • www.mmrma.org

MMRMA

To: LEELANAU COUNTY

Check Number: 142902

Date: 10/06/2023

Invoice Number	Date	Description	Amount	Paid Amount
RAP G24-08-5677	10/06/2023	RAP G24-08-5677	$3,055.30	$3,055.30

TOTALS: $3,055.30 $3,055.30

MMRMA

To: LEELANAU COUNTY

Check Number: 142902

Date: 10/06/2023

Invoice Number	Date	Description	Amount	Paid Amount
RAP G24-08-5677	10/06/2023	RAP G24-08-5677	$3,055.30	$3,055.30

TOTALS: $3,055.30 $3,055.30

PRINTED IN U.S.A.

THE FACE OF THIS DOCUMENT HAS A COLORED BACKGROUND ON WHITE PAPER

Comerica Bank, NA 072000096 142902

MICHIGAN MUNICIPAL RISK MANAGEMENT AUTHORITY

14001 MERRIMAN • LIVONIA, MI 48154

DATE Oct 6, 2023

AMOUNT $3,055.30

Pay Three Thousand Fifty Five Dollars And 30 Cents

to the Order of:

LEELANAU COUNTY

8527 E. GOVERNMENT CENTER DR.
SUITE 101
SUTTONS BAY, MI 49682

EXECUTIVE DOCUMENT SUMMARY

Department: Human Resources

Contact Person: Darcy Weaver

Telephone Number: 231-256-9711

Submittal Dates

☑ Select Meeting Type: Executive Board

Date of Meeting: 11/14/2023

Financial/Source Selection Method

☐ Select One: Select One

☑ Other: Temporary Staffing Increase

☑ *Account No.:* 101.645.400.703.000

☐ *CIP Project?*

☐ *If Grant, Match Account No.:* _____

Vendor: _____

Address/
Phone:

Description: Committee Recommendation

Budgeted Amount: _____ Contracted Amount: _____

Document Description

☐ **Request to Waive Board Policy on Bid Requirements** ☐ **Financial Review Completed** ☐ **Department Head/Elected Official Authorization**

Planning and Community Development Director Trudy Galla has announced her retirement after serving 35 years with Leelanau County. Trudy's last physical day worked in the office will be November 30, 2023 and her retirement date will be January 19, 2024.

The Personnel Committee is recommending a temporary staffing level increase for the remainder of 2023 through January 19, 2024 so the Planning and Community Development Director position can be filled as soon as possible.

Suggested Recommendation:

I move to recommend that the County Board of Commissioners approve the temporary staffing level increase for the Planning and Community Development Director position for the remainder of 2023 through January 19, 2024, as recommended by the Personnel Committee.

Department Approval: Darcy Weaver Digitally signed by Darcy Weaver Date: 2023.11.08 13:41:06 -05'00' Date: 11/08/2023

EXECUTIVE DOCUMENT SUMMARY

Department: Human Resources

Contact Person: Darcy Weaver

Telephone Number: 231-256-9711

Submittal Dates

☑ Select Meeting Type: Executive Board

Date of Meeting: 11/14/2023

Financial/Source Selection Method

☐ Select One: Select One

☑ Other: Temporary Staffing Increase

☑ *Account No.:* 101.100.101.703.000

☐ *CIP Project?*

☐ *If Grant, Match Account No.:*

Vendor:

Address/
Phone:

Description: Committee Recommendation

Budgeted Amount: $ 0.00 Contracted Amount: $ 0.00

Document Description

☐ **Request to Waive Board Policy on Bid Requirements** ☐ **Financial Review Completed** ☐ **Department Head/Elected Official Authorization**

Executive Assistant Laurel Evans has announced her retirement after serving 20 years with Leelanau County. Laurel's last physical day worked in the office will be in December 2023 and her retirement date will be March 22, 2024.

The Personnel Committee is recommending a temporary staffing level increase for the remainder of 2023 through March 22, 2024 so the Executive Assistant position can be filled as soon as possible.

Suggested Recommendation:

I move to recommend that the County Board of Commissioners approve the temporary staffing level increase for the Executive Assistant position for the remainder of 2023 through March 8, 2024, as recommended by the Personnel Committee.

Department Approval: Darcy Weaver Digitally signed by Darcy Weaver Date: 2023.11.08 13:39:02 -05'00' Date: 11/08/2023

EXECUTIVE DOCUMENT SUMMARY

Department: Sheriff's Office	**Submittal Dates**
Contact Person: Undersheriff J. Kiessel	☑ Select Meeting Type: Executive Board
Telephone Number: 231-256-8602	Date of Meeting: 11/14/2023
Financial/Source Selection Method	Vendor:
☐ Select One: Select One	Address/ Phone:
☑ Other: Staffing Level Request	
☐ *Account No.:*	
☐ *CIP Project?*	
☐ *If Grant, Match Account No.:*	**Description:** FYI/Review/Recommend./Update

Budgeted Amount: $ 0.00 Contracted Amount:

Document Description

☐ Request to Waive Board Policy on Bid Requirements ☐ Financial Review Completed ☑ Department Head/Elected Official Authorization

Administrative Secretary Jana Kiessel has notified the Sheriff's Office of her intent to retire effective April 19, 2024. Jana has been the only full-time Administrative Secretary for the Sheriff's Office since March of 2005. The Sheriff's Office also has a part-time Administrative Secretary that works 20 hours per week. The current part-time secretary has no desire to go full-time so a new full-time Administrative Secretary needs to be hired and trained prior to Jana's departure. Jana has been an exemplary employee and losing her to retirement will come at a great loss for the Sheriff's Office. Jana's institutional and operational knowledge cannot be taught by anyone else in the Sheriff's Office. She is solely responsible for the majority of report transcription, work flow within the Sheriff's Office as well as any outside agency. She maintains all statistical reports, monthly billings, monthly patrol car mileage, internal receipting and transfer of revenues to the Treasurers Office, as well as walk-in window contacts with citizens and fingerprinting. The list goes on and on. Jana's knowledge must be taught by the one person who has it. Therefore, this is the request of the Sheriff's Office to temporarily increase the departmental staffing levels and hire another full-time Administrative Secretary prior to Jana's retirement so she can train her replacement one-on-one. Ideally, the new person hired, will start on January 2, 2024 and will then have just under 4 months, not including requested time off, to work with Jana on every aspect of the Administrative Secretary's vital importance to the Sheriff's Office day-to day, month-to-month, and year-to-year operations. Then come late April, a smooth transition will be able to take place.

The 2024 hourly rate of the Executive Secretary is $24.45, the same rate of pay as our part-time employee. The hope would be that the Sheriff's Office would be able to fill this position internally from Leelanau County with another employee possessing some government experience. If that is not possible then the starting rate is $19.30. Given the importance and magnitude of this position, we feel that that pay rate is low. However; that lower rate would also help offset the cost of the staffing level temporary increase.

Suggested Recommendation:

I move to recommend that the County Board of Commissioners allow the Sheriff's Office be allowed to temporarily raise their staffing levels and hire an Administrative Secretary on January 1, 2024 to work and train with the current full-time Administrative Secretary until her retirement on April 19, 2024.

Department Approval: Undersheriff James C. Kiessel Digitally signed by Undersheriff James C. Kiessel Date: 2023.11.06 10:41:59 -05'00' Date: 11/06/2023

11-01-2023

Sheriff Mike Borkovich
Leelanau County Sheriff's Office

Dear Sheriff,

This is just my formal announcement that I will be retiring next spring with my last day being 04-19-2023.

Sincerely,

Jana R. Kiessel

EXECUTIVE DOCUMENT SUMMARY

Department: Human Resources Contact Person: Darcy Weaver Telephone No.: 231-256-8114	**Submittal Dates** ☑ Executive Board Session 11/14/2023
Source Selection Method ☒ Quotation ☐ Other: _____ *Account Number (Funds to come from):* _____	**VENDOR:** Rehmann Robson, LLC Address/ Phone: _____

Budgeted Amount: $ 23,341.00 Contracted Amount: $ 4,080.00

Document Description

☐ Professional Service ☒ Other Service Agreement

☒ **Request to Waive Board Policy on Bid Requirements**

For the past seven years we have entered into a service agreement with Rehmann Robson, LLC. This agreement covers:

- Preparation, filing and mailing of Form 1095-C (or 1095-B), Employer-Provided Health Insurance Offer and Coverage, for each individual employee as required by Internal Revenue Code section 4980H.
- Preparation and filing of Form 1094-C and 1095-C (or 1094-B or 1095-B) to the Internal Revenue Service for the calendar year ending December 31, 2023.

These filings are a requirement of the Affordable Care Act.

I am requesting that we continue utilizing the assistance of Rehmann Robson, LLC, due to the complexity of the IRS guidelines.

Suggested Recommendation: I move to recommend to the County Board of Commissioners to waive bid policy and to approve the Service Agreement with Rehmann Robson, LLC, for services as outlined in the agreement. Funds to come from Board of Commissioners Contractual Services #101.100.101.801.000.

Department Head Approval: Darcy Weaver Digitally signed by Darcy Weaver Date: 2023.10.17 09:27:24 -04'00' Date: 10/17/2023

Service Agreement

This Service Agreement (the "Agreement") is entered into between ***Rehmann Robson LLC*** (Rehmann), and the Employer, LeeLanau County ("Employer/Company") effective the 17th day of October 2023. The Company agrees to purchase, and Rehmann agrees to provide, Services (as described herein) to the Company on terms set forth in this Agreement. The Company acknowledges that Rehmann's responsibility to the Company is limited to those Services and as agreed to on Schedule A.

I. Services

- Preparation, filing, and mailing of Form 1095-C (or 1095-B) for each individual considered a full-time employee and each individual offered insurance that is not considered a full-time employee under Internal Revenue Code section 4980H for the calendar year ending December 31, 2023.
- Preparation and filing of Forms 1094-C and 1095-C (or 1094-B and 1095-B) to the Internal Revenue Service for the calendar year ending December 31, 2023.

We will base any tax-related analysis and recommendations on the facts that Company personnel provide to us and on tax law and interpretations that are subject to change. We will not independently verify the facts provided. Written advice, if any, provided by us is for the Company's information and use only and is not to be provided to any third party without our express written consent.

II. Company Representations and Responsibilities

The Company represents that: (1) it is authorized to enter into this Agreement; (2) each person who executes the Agreement has the authority to act on behalf of the Company; (3) all expenses constitute a liability of the Company until paid; (4) the Company's insurance advisors may view records maintained by Rehmann.

Management is responsible for identifying and ensuring that the Company complies with applicable laws and regulations. We perform services for the Company based on present professional standards, laws and regulations. While we will strive to communicate with the Company with respect to changes in professional tax standards, laws and regulations, or to related judicial and administrative interpretations of tax authorities, as a general principle we cannot undertake with the Company to advise management of each and every change that may occur.

III. Provision of Information

Rehmann may, from time to time, request certain information from the Company, which is necessary to enable Rehmann to adequately perform its duties. Rehmann, its officers, employees, and agents shall not be liable for any damages, tax, interest, penalties, or fines incurred by the Company or its employees, employees' spouses, or dependents if not all the requested information is furnished to Rehmann in a timely manner. All such data, whether oral or in writing, shall be accurate, and the nature, format, content, timing and appearance thereof has been determined to be acceptable to Rehmann, in its good faith business judgment and determination.

Rehmann shall be fully protected in relying on any such information furnished to it and is under no obligation to inquire into the correctness or accuracy of the data. The Company acknowledges that it is responsible for providing complete and accurate data on a timely basis. The Company further acknowledges that without such

accurate, complete, and timely data, it is impossible for Rehmann to provide accurate and timely reporting. The Company acknowledges that inaccurate information and/or late information could result in penalties. Rehmann assumes no responsibility for, and shall not have any liability for, any consequences that result from Rehmann's inability to complete its work in the ordinary course of its business due to the failure of the Company or Company representatives to provide timely and accurate information to Rehmann.

IV. Information Privacy

Rehmann and the Company agree that all information and data is confidential information of the Company. Rehmann and the Company agree that they will not (1) use any non-public personal information, regardless of the source of the data, for any purpose other than communicating with employees; (2) sell, sublicense, or resell non-public personal information to any third party; (3) use the non-public personal information for any unlawful purpose; (4) use the non-public personal information for any purpose other than its own internal purposes; or (5) use the non-public personal information for any purpose that would violate the privacy obligation policy.

In the interest of facilitating our Services to your Company, Rehmann may communicate by facsimile transmission or send electronic mail over the Internet. Such communications may include information that is confidential to your Company. Rehmann employs measures in the use of facsimile machines and computer technology designed to maintain data security. While Rehmann will use our best efforts to keep such communications secure in accordance with our obligations under applicable laws and professional standards, the Company recognizes and accepts that Rehmann has no control over the unauthorized interception of these communications once they have been sent and consents to our use of these electronic devices during the term of this Agreement. Additionally, Rehmann may send marketing materials, including an e-newsletter via electronic mail.

If applicable, Rehmann and the Client will each comply with any prohibitions, restrictions, limitations, conditions, or other requirements to the extent they apply to them directly or indirectly pursuant to the Health Insurance Portability and Accountability Act of 1996 ("HIPAA") and its implementing regulation concerning privacy of individually identifiable health information as set forth in 45 CFR Parts 160-164, as amended from time to time.

The Company and its agents agree to use all necessary and appropriate measures to safeguard the confidentiality of any information, data, or other materials transmitted to Rehmann (including, without limitation, any transmissions over the Internet) and to comply with such requirements as may be established from time to time by Rehmann. The Company will require that all parties adhere to the confidentiality standards in the preceding sentence with respect to data and information transmission.

V. Acts Beyond the Control of the Company or Rehmann

Neither the Company nor Rehmann will be responsible for delays or failures in performance resulting from acts beyond reasonable control; such as, but not limited to, acts of God, natural disasters, and equipment malfunctions.

VI. General Terms of the Agreement

The returns are subject to examination by the taxing authorities. In the event of an audit, the Company may be requested to produce documents, records, or other evidence to substantiate the items of income and deduction shown on a tax return. If an examination occurs, Rehmann will represent the

Company if the Company so desires. Additional fees may apply depending on the scope of the engagement.

The Company may request that Rehmann perform other additional services not contemplated by this Agreement. If this occurs, Rehmann will communicate with the Company regarding the scope of the additional services and the estimated fee. Rehmann also may issue a separate service agreement covering the additional services. In the absence of any other written communication from Rehmann documenting such additional services, our Services will continue to be governed by the terms of this Agreement.

Rehmann may use third-party service providers in serving your account. Rehmann may share confidential information about the Company with these service providers, but remains committed to maintaining the confidentiality and security of your information. Accordingly, Rehmann maintains internal policies, procedures, and safeguards to protect the confidentiality of your personal information. In addition, Rehmann will secure confidentiality agreements with all service providers to maintain the confidentiality of your information and Rehmann will take reasonable precautions to determine that they have appropriate procedures in place to prevent the unauthorized release of your confidential information to others. In the event that Rehmann is unable to secure an appropriate confidentiality agreement, the Company will be asked to provide your consent prior to the sharing of your confidential information with the third-party service provider. Furthermore, Rehmann will remain responsible for the work provided by any such third-party service providers.

It is our policy to keep records related to this Agreement for seven years. However, Rehmann does not keep any original client records, so Rehmann will return those to the Company at the completion of the Services rendered under this Agreement. When records are returned to the Company, it is your responsibility to retain and protect your records for possible future use, including potential examination by any government or regulatory agencies. By your signature, the Company acknowledges and agrees that upon the expiration of the seven-year period, Rehmann shall be free to destroy our records related to this Agreement.

Rehmann and the Company acknowledge that our relationship is exclusively that of an independent contractor and that Rehmann's obligations to the Company are exclusively contractual in nature. This engagement letter does not create an agency, employment, partnership, joint venture, trust or other fiduciary relationship between the parties. Neither party shall have the right to bind the other to any third party or otherwise to act in any way as a representative or agent of the other except as otherwise agreed in writing between the parties.

If any dispute arises among the parties hereto, the parties agree first to try in good faith to settle the dispute by mediation administered by the American Arbitration Association, or other association mutually agreed upon by the parties to this Agreement, under its Rules for Professional Accounting and Related Services Disputes, before resorting to litigation. The costs of any mediation proceeding shall be shared equally by all parties.

No delay or omission in the exercise of any right or remedy by a nondefaulting party shall impair such right or remedy or be construed as a waiver. A party's consent to or approval of any act by the other party requiring the party's consent or approval shall not be deemed to waive or render unnecessary the other party's consent to or approval of any subsequent act. Any waiver by either party of any default

must be in writing and shall not be a waiver of any other default concerning the same or any other provision of this Agreement.

The terms of this Agreement shall be construed in accordance with the meaning of the language used and shall not be construed for or against either party by reason of the authorship of this Agreement or any other rule of construction which might otherwise apply.

It is further understood that there are no oral agreements between the parties hereto affecting this Agreement and this Agreement supersedes and cancels any and all previous negotiations, arrangements, agreements, and understandings, if any, between the parties related to this matter, and none shall be used to interpret this Agreement. This Agreement may be amended at any time by the mutual consent of the parties by an instrument in writing.

The Company agrees that Rehmann's maximum liability to the Company for any negligent errors or omissions committed by us in the performance of this engagement will be limited to one times the amount of our fees earned for the most recent fiscal year of this engagement, except to the extent determined to result from our gross negligence or willful misconduct.

The Company shall indemnify and hold harmless Rehmann and its personnel from and against any payment, loss, cost or expense (including reasonable attorneys' fees) paid or incurred by Rehmann at any time and in any way i) relating to claims by any Company employees or former employees; ii) attributable to misrepresentations of the Company; or iii) arising out of or relating to the services under this agreement, except, as indicated above, to the extent determined to result from our gross negligence or willful misconduct. The foregoing indemnity is intended to apply to the extent not contrary to applicable law. This paragraph shall survive the termination of this agreement for any reason.

Notwithstanding anything to the contrary, Rehmann's maximum aggregate liability under this agreement (regardless of form of action, whether in contract, negligence or otherwise), shall be limited to the fees paid to Rehmann for the portion of the Company's fiscal year during the term of this agreement in which the latest event, act, or omission occurs which gives rise to such liability. In no event shall Rehmann be liable for consequential, incidental, special or punitive loss, damage or expense (including, without limitation, lost profits, opportunity costs, etc.), even if our Firm has been advised of their possible existence. This provision shall survive the termination of this agreement for any reason.

As a result of our prior or future services to the Company, we might be requested to provide information or documents to the Company or a third party in a regulatory, legal, administrative, or arbitration or similar proceeding in which we are not a party. If this occurs, our efforts in complying with such requests will be deemed billable to the Company. We shall be entitled to compensation for our time and reasonable reimbursement for our expenses (including legal fees) in complying with the request. For all such requests we will observe the confidentiality requirements of our profession and will notify management promptly of the request. If anyone requests or subpoenas any information or materials related to this engagement which is in our custody or control, we will inform management. Should the Company request us to take any legal action to seek protection against disclosure of such information or materials, the Company will either retain legal counsel to represent us, or will indemnify us for all costs and expenses, including attorney's fees and expenses.

In the event that any one or more of the phrases, sentences, clauses, paragraphs, or sections contained in this Agreement shall be declared invalid or unenforceable by a valid judgment or decree of a court of competent jurisdiction, such invalidity or unenforceability shall not affect any of the remaining phrases, sentences, clauses, paragraphs, or sections of this Agreement which are hereby declared as severable and shall be interpreted to carry out the intent of the parties hereunder unless the invalid provision is so material that its invalidity deprives either party of the basic benefit of their bargain or renders this Agreement meaningless.

VII. Fees and Billing

Services and Fees are provided in the attached Schedule A. Fees will be reviewed annually.

See Schedule A for fees and timing of billings. All invoices are payable upon receipt. Invoices become delinquent if not paid within 30 days of invoice date. If invoices become delinquent, they will incur an interest charge of 1.5% per month on any unpaid balances. If invoices are not paid within 90 days of invoice date, Rehmann reserves the right, at our discretion, to discontinue work until your account becomes current or withdraw from this Agreement. The Company acknowledges and agrees that Rehmann is not required to continue work in the event of the Company's failure to pay on a timely basis for services rendered as required by this Agreement. The Company further acknowledges and agrees that in the event Rehmann stops work or withdraws from this Agreement as a result of the Company's failure to pay on a timely basis for services rendered, Rehmann shall not be liable to the Company or any third parties for any damages that occur as a result of Rehmann's ceasing to render services. The Company will be obligated to compensate Rehmann for all time expended and to reimburse us for all out-of-pocket expenditures through the date of termination.

Sincerely,

Rehmann Robson LLC (Rehmann)

Laura Ponstine, QKA
Retirement Plan Administration Manager
616-975-2853

ACKNOWLEDGEMENT:

The Company agrees this letter correctly sets forth the understanding of the services and fees to be provided.

_____
Leelanau County

_____
Signature

Ty Wessell, Chairman, Leelanau County Board of Commissioners
Printed Name/Title

_____
Date

Schedule A

Services & Fees
For Calendar Year Ending 12/31/2023

Leelanau County

Services

Services Included:
Preparation, filing, and mailing of Form 1095-C (or 1095-B) for each individual considered a full-time employee under Internal Revenue Code section 4980H.
Preparation and filing of Forms 1095-C and 1094-C (or 1094-B and 1095-B) to the Internal Revenue Service.
Support for ongoing questions
Support in the event of ACA related IRS notices

Service	Amount	#Employees	Total Estimated Annual Fees
Annual Fee	$1300		$1300
Reporting/Filing/Mailing	$16.25	128	$2,080
Consulting and assistance with compiling required data, review of tax forms, ongoing questions and assistance (estimated 2 hours billed at hourly rate of $350)	$350	2 hours	$700

Implementation and Annual Fees will be billed immediately. Consulting services will be billed at hourly rate when services are provided. An annual reconciliation invoice will be generated once 1095 forms are prepared and the employee count is verified. Any additional consulting and assistance time above the amount quoted above will be billed as services are provided.

EXECUTIVE DOCUMENT SUMMARY

Department: Human Resources

Contact Person: Darcy Weaver

Telephone Number: 231-256-8114

Submittal Dates

☑ Select Meeting Type: Executive Board

Date of Meeting: 11/14/2023

Financial/Source Selection Method

☐ Select One: Select One

☑ Other: Policy Update

☐ *Account No.:*

☐ *CIP Project?*

☐ *If Grant, Match Account No.:*

Vendor: n/a

Address/
Phone:

Description: FYI/Review/Recommend./Update

Budgeted Amount: $ 0.00 Contracted Amount: $ 0.00

Document Description

☐ **Request to Waive Board Policy on Bid Requirements** ☐ **Financial Review Completed** ☐ **Department Head/Elected Official Authorization**

Leelanau County Policy #1.07, Non-union Personnel Policy, requires an update to be compliant with current Michigan law. The Paid Medical Leave Act requires that new employees be eligible for paid sick leave after 90 days of employment.

Policy #1.07(6)(B) has been updated to reflect this requirement.

Suggested Recommendation:

I move to recommend that the County Board of Commissioners approve the update to County Policy #1.07, Non-union Personnel Policy, as required by the Michigan Paid Medical Leave Act.

Department Approval: Darcy Weaver Digitally signed by Darcy Weaver Date: 2023.11.03 11:29:29 -04'00' Date:

LEELANAU COUNTY
BOARD POLICY

GENERAL SUBJECT: Employee Benefits & Policies (Administrator) — Policy No.: **1.07**

SPECIFIC SUBJECT: Non-Union Personnel Policy

Adopted:	01/14/1986
Revised:	02/02/1994
Revised:	01/01/2000
Revised:	05/17/2005
Revised:	11/18/2008
Revised:	01/01/2010
Revised:	04/21/2015
Revised:	02/19/2019

APPLIES TO: Non-Union County Employees
This policy is not applicable to elected county positions.

PURPOSE: This policy should not be construed as creating a contract between the County and any of the applicable employees. The interpretation and operation of the benefits noted herein are within the sole discretion of the Leelanau County Board of Commissioners (hereinafter referred to as the "County Board.") Benefits outlined in this policy may be added to, expanded, reduced, deleted or otherwise modified by the Leelanau County Board of Commissioners and any such modifications in this policy shall be solely within the discretion of the County Board.

The County reserves and retains, solely and exclusively, all rights to manage and operate its affairs and neither the constitutional nor the statutory rights, duties and obligations of the County shall in any way whatsoever be abridged by the terms of this policy.

Just as any employee may resign at any time for any reason, the County reserves the right to terminate an employee with or without cause, and with or without notice, at any time. The County/Employee relationship is one of employment "at will" and no representative of the County has authority to enter into any agreement for employment for any period of time or to make any agreement contrary to the foregoing. An employee shall not rely upon custom or prior practice. The fact that this policy may have been applied differently in the past does not affect their current or future enforcement.

Table of Contents

Attached hereto are:

- Drug Free Work Environment Policy
- Equal Employment Opportunity Policy
- Family Medical Leave Act Policy
- Information Technology Resources Policy
- Sexual Harassment Policy
- Travel Policy

1. Types of County Positions

A. Regular Full-Time Positions. Employees hired to perform year round work and who work a normal workweek shall be considered regular full-time employees.

Generally, regular full-time employees are regularly scheduled to work a thirty-five (35) hour workweek.

Certain specifically designated regular full-time employees are scheduled to work a thirty-seven and one half (37½) hour workweek and/or a forty (40) hour workweek.

B. Regular Part-Time Positions. Employees hired to perform year round work but who work less than the normal workweek shall be considered regular part-time employees.

C. Grant Positions. Employees hired to perform work pursuant to a state or federal grant shall be considered grant employees.

D. Temporary Positions. Employees hired for a limited period of time for either full or part-time employment shall be considered temporary employees. A temporary employee shall be hired for a period not to exceed twenty-six (26) weeks, and shall receive Social Security and Workers' Compensation benefits and are not eligible for any other fringe benefits.

2. Pay Periods and Overtime

A. Pay Period. The County payroll shall be prepared on a bi-weekly basis and payroll checks shall be issued no later than 4:00 p.m. on the Thursday following the close of the payroll period. When emergency conditions make this impossible, paychecks shall be issued and distributed as soon as possible thereafter.

B. Overtime Compensation. Leelanau County generally attempts to discourage overtime. However, on rare occasions when overtime is required, the County will compensate employees eligible under the Fair Labor Standards Act ("FLSA") as follows: Work in excess of forty (40) hours per week will be considered overtime and shall be compensated at a rate of one and one half (1½) times the base hourly rate computed and paid in the payroll period in which the time was worked.

All overtime must have prior approval of the employee's Supervisor and shall be based on hours worked.

The above-described compensation for hours worked beyond the normal workweek does not apply to managerial and professional employees of the County who are exempt from overtime by the FLSA.

C. Time Records. At the completion of a payroll period, each employee shall prepare, submit, and sign an approved timesheet. Timesheets shall be the basis for preparing payroll and recording deductions from accumulated vacation, personal and other types of leave taken by employees. Timesheets shall be submitted to the Accounting Department by 10:00 a.m. the Monday following the end of the pay period, unless requested earlier due to a holiday.

3. 401(a) Plan, Longevity Pay, and Retirement Plans

A. 401(a) Plan or Longevity Pay.

Employees hired on or after January 1, 2015, will not be eligible for Longevity Pay.

For employees hired before January 1, 2015, Leelanau County will match employee contributions for those regular full-time employees who choose to participate in an approved 401(a) Plan as the schedule below illustrates. For those regular full-time employees who do not choose to participate in an approved 401(a) Plan, the Longevity Pay for the calendar year is shown under the column marked "Longevity Pay." Annual contributions shall be made on the employee's anniversary date provided the employee's contribution has matched the longevity amount. Thereafter, bi-weekly payments will be made matching the employee's contribution until the longevity payment is complete.

Employees must indicate their plan selection (401(a) Plan or Longevity Pay) prior to December 15 of the year preceding the year in which they will reach their 2nd anniversary with the County on a form provided by the Accounting Department. This one-time only decision is irrevocable.

Length of Employment	Employee Contribution	Max. County Contribution	OR	Longevity Pay
2-4 Years	$300.00	$300.00		$200.00
5-9 Years	$600.00	$600.00		$500.00
10-14 Years	$800.00	$800.00		$700.00
15+ Years	$1,000.00	$1,000.00		$800.00

Part-time employees are not eligible for the 401(a) Plan or for Longevity Pay. If an employee changes from part-time to full-time status, the employee's start date of full-time employment will be used for the purpose of computing benefits.

B. Retirement Plans.

1. Municipal Employees Retirement System. All regular full-time and regular part-time employees shall be members of the Michigan Municipal

Employees Retirement System. The County shall offer the MERS B-4 Plan (Defined Benefit), 50/25, FAC 5, vesting 10 years, no member contribution.

For new employees hired on or after March 21, 2012, the County shall offer the MERS B-2 Plan (Defined Benefit), age 60, FAC 5, vesting 10 years, member contribution of 2%.

2. Deferred Compensation. The County shall make available to all regular full-time and regular part-time employees a plan for deferred compensation until such time that the employee terminates his/her employment with the County by retirement or otherwise. This benefit is voluntary on the part of the employee.

4. Normal Workweek

Leelanau County offices shall normally be open five (5) days each week, Monday through Friday, from 9:00 a.m. to 5:00 p.m., except for legal holidays designated in this policy. Employees will receive a one (1) hour unpaid lunch break.

The normal workweek for Leelanau County employees shall be thirty-five (35) hours per week, except for employees specifically designated to work a thirty-seven and one half (37½) hour workweek and/or a forty (40) hour workweek.

5. Legal Holidays

A. The following holidays shall be observed as legal holidays by the County:

1. New Year's Day
2. Martin Luther King, Jr. Day
3. Presidents' Day
4. Good Friday - Four (4) hours in the afternoon
5. Memorial Day
6. Independence Day
7. Labor Day
8. Veterans Day
9. Thanksgiving Day
10. Friday after Thanksgiving Day
11. Workday before Christmas Day
12. Christmas Day

B. Most County offices shall be closed on these designated holidays except those offices furnishing continuous services seven (7) days per week or where circumstances make such work necessary.

C. Whenever one of the above-designated holidays falls on a Sunday, the Monday following shall be considered the official holiday and whenever one of the above-designated holidays falls on a Saturday, the immediate preceding workday shall be considered as the official holiday.

D. Whenever a legal holiday falls within a period an employee is on authorized personal days or vacation leave, that legal holiday shall not be deducted from the employee's personal days or vacation leave accumulation.

E. To be eligible for holiday pay, an employee must work a full regular scheduled workday before and after the holiday, unless the employee is on authorized vacation leave or personal days.

F. Regular part-time employees, who are regularly scheduled to work on the day a holiday is observed, shall observe the holiday and be compensated for the number of hours they were scheduled to work.

6. Leaves of Absence

A. Vacation Leave.

1. Regular full-time employees who have completed one (1) year of continuous employment with the County since their last hiring date shall earn vacation leave as set forth below:

After:	Maximum
1 year	6 days
2 years	12 days
5 years	18 days
10 years	20 days
15 years	22 days

Vacation leave shall be accrued on the employee's anniversary date. Vacation leave may be taken in increments.

2. Vacation leave shall be taken with the permission of the employee's Supervisor and shall be scheduled as far in advance as possible.

3. Employees shall not be entitled to take vacation leave the first year of employment with the County.

4. Vacation leave may not be taken prior to being earned.

5. Employees, while on personal days, shall continue to earn vacation leave.

6. Employees on a 35-hour workweek shall not be permitted to accumulate unused vacation leave beyond two hundred ten (210) hours, (thirty (30) days.)

7. Employees on a 37½-hour workweek shall not be permitted to

accumulate unused vacation leave beyond two hundred twenty-five (225) hours, (thirty (30) days.)

Employees on a 40-hour workweek shall not be permitted to accumulate unused vacation leave beyond two hundred forty (240) hours, (thirty (30) days.)

8. Regular part-time employees shall earn vacation leave based upon their length of continuous service to the County, such vacation leave being prorated on the ratio of regularly scheduled hours worked to the normal hours of the workweek.

9. Vacation leave shall apply to regular full-time and regular part-time employees only.

10. Benefits Upon Separation. After completing one (1) year of service, employees who leave the employ of the County prior to their anniversary date in any year will receive prorated pay for accrued, but not yet credited, vacation time for that year, in addition to any other unused accrued vacation time earned.

Employees who leave the employ of the County may receive pay for accrued but unused vacation leave in any of the following circumstances:

- If an employee retires in accordance with the retirement plan currently in effect.
- If an employee resigns from employment and a minimum of two (2) weeks advance notice is given.
- If an employee is laid off and requests payment of vacation leave pay, provided, however, that such vacation leave pay shall be designated to the period of the layoff.

Employees who are terminated from their employment with the County are not entitled to receive pay for accrued but unused vacation leave.

B. Personal Days. During the first ~~six (6) months~~ 90 days of employment with Leelanau County, an employee shall not be entitled to take personal days. However, after an employee has completed ~~six (6) months~~ 90 days of employment with the County, he/she shall be entitled to the personal days accrued from the date of employment. An employee must notify his/her Supervisor prior to taking personal days. (Updated to comply with Michigan Paid Medical Leave Act)

1. Effective January 1, 2015, new hires shall receive eight (8) personal days

annually. Hourly personal time has been eliminated.

2. Regular full-time employees hired prior to January 1, 2015, who are scheduled to work a thirty-five (35) hour workweek, shall be credited on January 1st of year each with twelve (12) personal days, and an additional seven (7) personal hours of leave to be used on an hourly basis.

3. Regular full time employees hired prior to January 1, 2015, who are scheduled to work a forty (40) hour workweek, shall be credited on January 1st of each year with twelve (12) personal days, and an additional eight (8) personal hours of leave to be used on an hourly basis.

4. Regular part-time employees shall be credited with personal days on a prorated basis.

5. New hires employed after January 1st shall receive prorated personal days in relation to the number of months left in the year.

6. One (1) personal day shall equal seven (7) hours, seven and one half (7½) hours, or eight (8) hours, depending on the employee's work schedule, at the employee's regular hourly rate of pay when he/she takes a personal day. Personal days may be taken in increments.

7. Employees shall normally give the Employer at least forty-eight (48) hours advance notice of their intent to use a personal day unless sickness or injury prevents same. Personal days will normally be granted unless an emergency exists or required staffing cannot be scheduled.

8. Employees who leave the employ of the County, other than for retirement, shall have that year's personal leave pro-rated in relationship to the number of months worked in the year the employee leaves. Any excess Personal Leave taken will be deducted from the final paycheck.

9. Accumulation of Personal Days. No accumulation or carryover shall be allowed from year to year. All unused personal days and hours shall be forfeited.

10. Holiday. If a holiday as defined in this policy falls within an employee's personal day off, it shall not be counted as a personal day unless the employee was scheduled to work on a holiday.

11. Leave of Absence. Personal days shall not accrue during periods of leave of absence.

12. Personal Day Schedules. Personal day schedules for time off for

employees shall be developed and approved by his/her Supervisor. Each Supervisor shall schedule personal days over as wide a period as possible in order to maintain required services. A personal day may be taken with forty-eight (48) hours advance approval by the Supervisor, unless due to sickness, weather emergency, or the Supervisor approves less notice.

13. Verification of Illness.

- If an employee is unable to come to work because of sickness, he/she shall notify their Supervisor prior to the work shift, but no later than two (2) hours after the normal workday has commenced.

- An employee who is unable to work may be required to present verification of illness to return to his/her regular job duties.

- Employees returning to work from an illness or leave of absence may be required by his/her Supervisor to submit a statement from his/her physician qualifying his/her ability to work or to verify the illness.

- In the event of a dispute involving an employee's physical or mental ability to perform his/her job or to return to work after a leave of absence of any kind and the Employer is not satisfied with the determination of the employee's doctor, the Employer may require a report from a medical doctor of the Employer's choosing at the Employer's expense if not covered by the employee's insurance. If the dispute still exists, the Employer's doctor and the employee's doctor shall agree on a third doctor to submit a report to the Employer and the employee. Any expense of the third doctor shall be borne equally by the Employer and the employee, if not covered by the employee's health insurance.

C. Bereavement Leave.

1. Bereavement leave is a paid absence from work due to the death of a member of the employee's family or household.

2. An employee must notify his/her Supervisor immediately if it is necessary to use Bereavement Leave.

3. Employees will be paid for up to four (4) days absence in the case of a death of the following family member:

Father	Mother	Sister	Brother
Child	Step-child	Spouse	

Employees will be paid for up to three (3) days absence in the case of a death of the following family member:

Grandparent	Grandchild	Grandparents-in-law
Mother-in-law	Father-in-law	Brother-in-law
Sister-in-law	Daughter-in-law	Son-in-law
Step-parent	Step-brother	Step-sister
Dependents living in the home		

Additional time may be taken from accrued vacation leave or personal days upon approval from the employee's Supervisor.

4. Time taken off with pay as Bereavement Leave shall not be deducted from either the employee's Annual Vacation Leave or Personal Day accumulation.

5. Verification of Death. The Supervisor may require verification of death for employee to receive bereavement benefits.

6. Bereavement Leave may be used intermittently upon approval from the employee's Supervisor.

D. Leave for Jury or Court Duty. An employee called upon to serve on a jury or who is subpoenaed to appear in court on a work related matter shall continue to receive his/her regular compensation while so engaged. In the event the employee is awarded a fee for such service, the employee shall surrender those fees to the County. The employee shall be required to return to work if one (1) or more hours remain in the normal work day.

E. Military Leave. See Family and Medical Leave Act Policy.

F. Family and Medical Leave. See Family and Medical Leave Act Policy.

G. Unpaid Personal Leave other than FMLA. For reasons other than illness, all regular full-time and regular part-time employees who have completed six (6) months of employment may request an unpaid personal leave of absence for a period not to exceed thirty (30) days in any one (1) calendar year. All requests must be in writing, must give the reason for the request, must give the expected duration of the leave and must be approved by the employee's Supervisor and County Administrator. Requests can be for more than thirty (30) days, if approved by the Board of Commissioners. A personal leave of absence may be granted to attend an educational institute, or for other reasons deemed appropriate by the Supervisor and County Administrator. All personal leaves of absence shall be without pay and benefits.

An employee will not accumulate personal days or vacation leave, nor will the employee be paid for holidays which may fall during the leave period.

When a leave of absence is granted for more than thirty (30) calendar days, for any reason, the County does not guarantee that the employee will be reinstated in his/her former position or to the same grade and step level when he/she is ready to return to work. That decision will be at the discretion of the Supervisor.

7. Insurance Benefits

A. Health Insurance. Leelanau County provides health insurance, which includes medical, vision and/or dental insurance. Employees electing to receive health insurance should see the County Clerk for eligibility requirements.

Part-time employees who work a minimum of twenty-one (21) hours per week may elect to receive health insurance. Part-time employees electing such coverage shall reimburse the County for the difference in the premium of the prorated benefit for the employee and may purchase spousal or family coverage through the employer at the full cost to the employee, subject to federal law.

Upon separation of employment, the County shall pay the premium for health insurance through the end of the premium month such separation becomes effective.

If health insurance is available for an employee through another source, the employee may receive payment in lieu of obtaining health insurance. The employee must provide documentation of enrollment in alternative coverage before receiving opt out payments.

The payment in lieu of health insurance shall be 50% of the County's share of the premium that is actually paid by the County. Employees who opt out of the health care shall be permitted to purchase dental and vision coverage with the total cost being borne by the employee.

If an employee's dependent is no longer eligible for coverage, it is the employee's responsibility to notify the County Clerk in writing so that the proper adjustments may be made. If the employee fails to notify the County Clerk of the fact that the dependent is no longer eligible for coverage within thirty (30) days of the event, the employee may be subject to discipline, up to and including termination, and may be billed for expenses incurred by the County.

B. Sick and Accident Insurance. All full-time and regular part-time employees shall be eligible for sickness and accident insurance coverage in an amount equal to sixty

percent (60%) of their normal gross weekly wage (up to $500.00 per week.) These benefits shall be payable from the first (1st) day of disability due to accidental bodily injury, or the eighth (8th) day of disability due to sickness or hospitalization for the first twenty-six (26) weeks. Contact the County Clerk's office for appropriate forms.

Long-term disability insurance will begin on the one hundred eighty-first (181st) day of injury/illness upon certification of the disability. Long-term disability shall provide for sixty percent (60%) of an employee's gross weekly wage (based upon the employee's work week) up to $5,000.00 per month. Long-term disabilityshall continue as outlined in the carrier's policy.

Employees eligible for health insurance shall continue to receive fully paid health insurance for the first six (6) months of disability.

Seniority for any non-duty related disability shall continue for twenty-four (24) months from the date of injury or illness.

C. Workers' Compensation.

1. Employees are covered by the Workers' Compensation Laws of Michigan.

   Any employee involved in a work-related accident or injury must report that accident or injury to his/her Supervisor and the County Administrator by the end of the work day to fill out the proper reporting forms. Failure to properly report an injury may disqualify an employee for benefits under Workers' Compensation Insurance.

2. An employee receiving Workers' Compensation payments shall not earn vacation and personal days credit while on Workers' Compensation nor shall he/she be eligible to receive holiday pay. The County will continue for eligible employees, to pay the premiums on health and life insurance for a maximum of one hundred eighty (180) days from the date of the injury, where applicable and this time shall count toward FMLA. Thereafter, the employee may make arrangements to pay the premiums to continue those insurances, provided that the insurance carrier permits the same. All other fringe benefits shall cease while on Workers' Compensation. The above benefit is supplemental in nature only and is not intended to supersede or adjust any primary coverage.

D. Life Insurance. All regular full-time employees are covered by a life insurance policy effective on the first month following thirty (30) days of continuous employment in the amount of Fifty Thousand and no/100 Dollars ($50,000.00.) The entire premium is paid for by the County.

All regular part-time employees are covered by a life insurance policy effective on the first month following thirty (30) days of continuous employment in the amount of Ten Thousand and no/100 Dollars ($10,000.00.) The entire premium is paid for by the County.

Upon separation of employment, the life insurance policy is portable. The employee is responsible for premiums thereafter.

8. Travel Expenses See Travel Policy.

9. Inclement Weather

A. When the County buildings are officially closed by the Chairperson of the Board of Commissioners, or the Vice Chairperson in his/her absence, in consultation with the County Administrator, due to inclement weather or other acts of God and employees are instructed to return home, they will be paid for their regularly scheduled hours.

Prior to the opening of the County buildings on any regularly scheduled workday, the Chairperson of the Board of Commissioners, or the Vice Chairperson in his/her absence, in consultation with the County Administrator, may officially close the County buildings due to inclement weather or other acts of God. In such event, employees shall be paid for their regularly scheduled hours. Employees who do not return to work because of continuing inclement weather conditions after the County has been officially reopened must use personal days or vacation leave in order to be paid.

The decision to close the County will be broadcast on the following local media if possible:

RADIO	WTCM 580 AM and 103.5 FM WCCW 107.5 FM WKLT 97.5 FM
TELEVISION	WPBN and WTOM Channels 7 and 4 WWTV Channels 9 and 10

B. When an employee is on vacation leave or personal days, he/she shall not be charged with the time if an inclement weather day occurs during that period if they are compensated for the entire day before and the entire day after the inclement weather day.

C. This inclement weather policy shall not apply to employees who provide emergency services or who are called into work by their Supervisor.

10. Tuition Reimbursement

Any regular full-time, full-time grant, and regular part-time employees covered by this policy (non-union) are eligible for financial assistance for tuition costs for college or university courses taken in an approved technical, undergraduate, or graduate program after one (1) complete year of full-time County employment.

The County shall reimburse the employee fifty percent (50%) of tuition costsif:

A. Recommended by the employee's Supervisor and the County Administrator and approved by the Board of Commissioners prior to enrollment in thecourse.

B. The college or university is approved by the Supervisor and the County Administrator. The course taken must be directly job related, as determined by the Supervisor and the County Administrator.

C. Prior to being reimbursed for tuition expenses, the employee must present the County Administrator a receipt for payment and proof of a grade of "C" (or its equivalent) or higher.

D. Employees eligible for education compensation under the Veterans G.I. Bill or other government sponsored programs will have to exhaust their other benefits prior to being eligible for County education benefits.

E. Reimbursement includes tuition, registration, books, lab fees, and administrative fees but not meals or travel expenses.

F. Reimbursement is subject to and conditioned upon money being appropriated in the employee's Department budget for this specific purpose.

G. Tuition reimbursement is subject to all IRS required tax withholding.

11. Rules of Conduct

Leelanau County employees are expected to adhere to the following rules of conduct. The following list is for illustration purposes only and is not intended to be all-inclusive, and employees may be disciplined for matters not listed below. Further, the list may be added to, modified or supplemented by the County Board of Commissioners. The purpose of the rules is to set forth some guidelines for conduct, violation of which will result in disciplinary action, including possible discharge. Other types of behavior can subject an employee to disciplinary action including discharge. Further, all employees serve at the will and pleasure of the County, and may be terminated with or without cause.

A. Tardiness. Employees who are late may be docked for time lost and disciplined.

B. Absenteeism. Employees are required to notify their immediate supervisor prior to any absence as soon as possible.

C. Dress and Grooming. Employees are expected to maintain a neat and professional appearance in accordance with their position and working conditions. The Supervisor may implement a dress code for his/her department. Some jobs may have additional restrictions for safety reasons.

D. Public Decorum. All employees must maintain a pleasant and helpful attitude in dealing with members of the public and co-workers, whether by telephone or in person.

E. Acceptance of Gifts. Employees shall not accept any gifts or gratuity from any individual or agency that may be construed as influencing a decision of a County employee. Using one's position of employment with the County for personal gain or receiving anything of value other than regular compensation is prohibited.

F. Personal Mail and Packages. Personal mail and packages should not be addressed to the County address. Employees shall not use County postage or other property for personal business.

G. Visitors. Friends, relatives and children of employees are not allowed in the working areas without the approval of the Supervisor.

H. Sexual Harassment. See Sexual Harassment Policy.

I. Stealing, attempting to steal, misusing, or deliberately destroying County property, tools and equipment or the property of other County employees is prohibited.

J. Unauthorized use of County property, equipment or facilities (including telephones, vehicles and duplicating equipment) is prohibited.

K. Falsification or unauthorized altering of employment application information, records (payroll or program records), or County records is prohibited.

L. Refusal to obey or willful failure to carry out the instructions of supervisory personnel, including the assigned duties of the job is prohibited.

M. The following are prohibited:

1. Failing to report to work when scheduled.

2. Improper use of personal leave or other leaves of absence.

3. Falsification of information to secure personal time off or other leaves of absence.

4. Abuse of lunch periods.

5. Violation of departmental rules on confidentiality.

6. Inefficiency, incompetence, or neglect of duty.

7. Reporting to work or working in an intoxicated condition. Consumption or possession of alcohol or illegal drugs or substance (such as marijuana) on County premises or property while on or off duty. See Drug Free Work Environment Policy.

8. Use of obscene language in public office areas.

9. Threatening other persons or instigating a fight.

10. Unauthorized possession of firearms, dangerous weapons or personal protection devices.

11. Verbally abusing or physically attacking customers, clients, visitors or County personnel.

12. Conduct disruptive to the work of other employees.

13. Carelessness or negligence, which results in an injury to another employee, client or visitor.

14. Illegal activity on County premises (misdemeanor or felony) during work or non-work hours.

15. Violation of rules concerning outside supplemental employment.

16. Instigating, aiding, or participating in any illegal strike or work stoppage.

17. Disrespect, verbal abuse or insubordination to any Supervisor.

18. Operating vehicles or equipment without a valid operator's license.

N. Personal Equipment and Valuables. It is impossible to secure insurance coverage for personal equipment and valuables brought on County premises. Employees are discouraged from having personal items in their office and the County cannot be responsible for any loss or damage to such items.

O. County Property. Employees shall conform to all rules for use and treatment of County facilities and property, not use any County property, equipment, vehicles, facilities or staff for personal matters or gain.

P. Felony and Misdemeanors. Conviction or pleading guilty or nolo contendere to a felony may result in automatic termination of employment. Conviction or pleading guilty or nolo contendere to a misdemeanor may result in automatic termination of employment.

Q. Telephone Calls. Use of County telephones is not permitted for personal long distance calls except in emergencies. Supervisors may require employees to log all telephone calls. Personal calls shall be kept to a minimum.

R. Change of Name, Address, Telephone Numbers, or Dependents. For employees who have a name change, marry, have children, divorce, change telephone numbers, or change of address, they must inform their Supervisor and the County Administrator in writing NO LATER THAN 30 DAYS AFTER THE FACT so that the personnel records and insurances may be adjusted. It is the employee's responsibility to keep the County Administrator up to date regarding these matters.

Forms may be obtained from the County Clerk's office or the Accounting Department.

S. Resignation. Should an employee leave employment, a minimum notice of fourteen (14) calendar days in writing must be given to his/her Supervisor.

T. Employment of Relatives. It is the policy of the County to permit the employment of qualified individuals who are related to an existing employee provided a supervisory-subordinate relationship would not exist as a result of that employment. Relatives are defined as spouse, brothers, sisters, parents, in-laws, and natural or adopted children.

If a supervisory-subordinate relationship occurs as a result of a marriage between two (2) employees working in the same department, then the County will attempt to transfer one (1) of the individuals but it is not required to do so. If a transfer does not occur, one (1) of the employees will be required to resign within sixty (60) days of the marriage.

U. Personnel Records. Personnel records are maintained in the County Administrator's Office for employees and some records may be kept by the employee's Supervisor. Personnel records include information on initial employment or re-employment, professional credentials, wage increases, promotions, demotions, disciplinary actions and other pertinent employment information. Employees may have access to review and have a copy made of their personnel file provided the County

Administrator, or his/her designee, is present during the review.

V. Outside Employment. While outside or supplemental employment is discouraged, employees may engage in outside or supplemental employment in accordance with the following limitations. In no case shall outside or supplemental employment conflict with, or impair an employee's responsibilities to the County. Any employee desiring to participate in outside or supplemental employment must inform his/her Supervisor. The following guidelines shall be applicable to all employees engaged in outside or supplemental employment.

1. Employees engaged in outside or supplemental employment shall:

- Not use County facilities as a source of referral for private customers or clients.
- Not be engaged in during the employee's regularly scheduled working hours.
- Not use the name of the County or any County agency as a reference or credential in advertising or soliciting customers or clients.
- Not use County supplies, facilities, staff or equipment in conjunction with any outside or supplemental employment or privatepractice.
- Maintain a clear separation of outside or supplemental employment from activities performed for the County.
- Not cause any incompatibility, conflict of interest, or any possible appearance of conflict of interest, or any impairment of the independent and impartial performance of the employee's duties.

2. The County shall not be liable, either directly or indirectly, for any activities performed during outside or supplemental employment.

W. Smoking. All Leelanau County Buildings have been designated as smoke free buildings.

X. Information Technology Resources. See Information Technology Resources Policy.

12. Complaint Procedure

A. General. This complaint procedure shall be applicable to regular County employees covered under this policy, alleging a violation of these County personnel policies. Excluding, however, employees employed by Elected County Officials (Sheriff,

Treasurer, Clerk, Register of Deeds, Drain Commissioner, Prosecutor, Circuit Court and District Court) for disciplinary or discharge matters.

Complaints of employees working for Elected Officials for disciplinary or discharge matters who are not covered by a collective bargaining agreement may be considered under this procedure if such Elected Official, at his/her option, permits the same and requests processing of the complaint in writing to the Board.

This complaint procedure is also not applicable to any County Elected Official or County employees who receive direct appointments by the County Board of Commissioners such as appointed Supervisors.

A complaint shall be reduced to writing and shall state the facts giving rise to the complaint, the sections of this policy alleged to have been violated, the remedy requested, and must be signed by the employee involved. All complaints must be brought to the Supervisor's attention within three (3) working days from the date of the action giving rise to the complaint, or within three (3) working days after the employee should have had knowledge of the action giving rise to the complaint.

B. Procedure.

Step 1. An employee alleging a complaint shall submit his/her complaint within three (3) working days of its occurrence or when the employee should reasonably have obtained knowledge of its occurrence. If not so submitted, the complaint shall be considered automatically closed.

The Supervisor shall write his/her disposition within two (2) working days.

The Supervisor does not have the authority to alter benefits as set forth in this Personnel Policy.

Step 2. Any complaint, which is not resolved in Step 1, may be submitted to the County Administrator within two (2) working days after receipt of the written disposition in Step 1.

The Administrator shall investigate the complaint and shall respond in writing to the complaint within ten (10) working days following receipt of the complaint, with copies to the Leelanau County Board of Commissioners.

Step 3. Any complaint, which is not resolved in Step 2, may be submitted to the County Board of Commissioners within two (2) working days after receipt of the disposition in Step 2.

The Board of Commissioners shall investigate the complaint and make recommendations to resolve the complaint.

The Board has the authority to revoke written warnings, transfers, demotions, and to reverse decisions on suspensions and/or discharge of employees and award back pay.

The Board's decision on such matters will be final and binding on all parties.

C. Time and Procedural Limitations. No complaint shall be considered at any step unless it has been filed and processed within the respective time limits and procedures set forth above.

If said time limits and procedures are not adhered to by the employee, the complaint shall be considered dropped and not subject to further appeal.

ACKNOWLEDGMENT

The undersigned employee of Leelanau County hereby acknowledges that he/she has received a copy of the following:

- Drug Free Work Environment Policy
- Equal Employment Opportunity Policy
- Family Medical Leave Act Policy
- Information Technology Resources Policy
- Non-Union Personnel Policy
- Sexual Harassment Policy
- Travel Policy

The undersigned employee understands that nothing in this policy is intended in any way to create a contract of employment, and agrees to follow all applicable policies.

_____ _____

Employee Signature Date

ATTACHED HERETO: Drug Free Work Environment Policy
Equal Employment Opportunity Policy Family
Medical Leave Act Policy Information Technology
Resources Policy Sexual Harassment Policy
Travel Policy

EXECUTIVE DOCUMENT SUMMARY

Department: Human Resources

Contact Person: Darcy Weaver

Telephone Number: (231) 256-8114

Submittal Dates

☑ Select Meeting Type: Executive Board

Date of Meeting: 11/14/2023

Financial/Source Selection Method

☐ Select One: Select One

☑ Other: Policy Update

☐ *Account No.:*

☐ *CIP Project?*

☐ *If Grant, Match Account No.:*

Vendor:

Address/
Phone:

Description: Committee Recommendation

Budgeted Amount: $ 0.00

Contracted Amount: $ 0.00

Document Description

☐ **Request to Waive Board Policy on Bid Requirements** ☐ **Financial Review Completed** ☐ **Department Head/Elected Official Authorization**

The Resolution to Adopt a Voluntary Sick Leave Donation Policy was drafted by Legal Counsel and Rehmann Principal Elizabeth Williams refined the policy to align with IRS regulations. This policy has been reviewed by the Personnel Committee and has been brought to the full board for approval by the committee's recommendation.

By adopting the resolution and policy, Leelanau County will have a leave donation program that adheres to Internal Revenue Service rulings and requirements for favorable tax treatment of a bona fide Medical Leave Sharing Program.

Suggested Recommendation:

I move to recommend that the Leelanau County Board of Commissioners approve by resolution to adopt the Voluntary Medical Sick Leave Donation Policy that is compliant with the Internal Revenue Service, as recommended by the Personnel Committee.

Department Approval: Darcy Weaver Digitally signed by Darcy Weaver Date: 2023.11.08 13:00:24 -05'00'

Date: 11/08/2023

LEELANAU COUNTY BOARD OF COMMISSIONERS

RESOLUTION TO ADOPT A VOLUNTARY MEDICAL SICK LEAVE DONATION POLICY

RESOLUTION # ___

WHEREAS, the administrative interpretation regarding ability of County employees to donate and/or receive donated sick leave time have previously varied; and

WHEREAS, in an attempt to provide and adhere to Internal Revenue Service rulings and requirements regarding the requirements for favorable tax treatment of an employer sponsored bona fide to leave-sharing programs for defined medical emergencies ("Medical Leave Sharing Program"), as well as consistency and equity across County employment for the donation process, the Human Resources (HR) Department proposed a uniform policy which establishes county-wide standards for voluntary sick leave donations; and

WHEREAS, the County Counsel and the Human Resources Director recommends that the Leelanau County Board of Commissioners adopt a Voluntary Medical Sick Leave Donation Policy.

THEREFORE, BE IT RESOLVED, that the Leelanau County Board of Commissioners hereby adopts the attached Voluntary Medical Sick Leave Donation Policy.

A. Introduction

Leelanau County places a great deal of importance on work attendance by employees and does provide for absences due to illness of the employee or an immediate family member. However, the County recognizes that there are times when unforeseen events happen when employees need assistance from their fellow employees due to unpaid FMLA qualifying events that result a prolonged absence resulting in a substantial loss of income.

B. Guidelines

1. To be eligible to accept sick leave donations an employee:

   a. Must not be on probation.

   b. Must have been approved for a FMLA-qualifying event that would cover the employee or the employee's FMLA covered family members

   c. Must utilize the sick leave time within 90 days of the request and can only be used for FMLA-approved leaves.

d. Must have exhausted all forms of paid or banked leave or compensation and the additional expected duration of the unpaid leave will be prolonged and will result in a substantial loss of income.

e. Must make a request for sick leave donations to their immediate supervisor and file a written request with the Human Resources Department.

2. To be eligible to donate to the sick leave bank, an employee:

   a. Must not be on probationary status.

   b. Cannot donate more than a combined total of 40 vacation hours per calendar year to the sick leave bank. Personal hours are not eligible to be donated.

   c. Must have at least 40 hours remaining in their vacation bank after making a donation.

   d. Must complete any request for sick leave donation by the posted deadline signing and returning the appropriate form provided by the Human Resources Department agreeing to transfer banked vacation hours and delineating the specific number of hours the employee is willing to donate. Once approved, individual employee transfer of donated vacation time is irrevocable.

3. Vacation Leave Donations

   a. Human Resources will determine a projected number of donated hours needed, based on requests. Once that projected number of donated hours is reached, donations will no longer be accepted until Human Resources sends out another donation request to all employees.

   b. Employees who are eligible to donate to the sick leave bank may donate up to an aggregate of 40 hours of vacation time in a calendar year.

   c. Donations of vacation time to the sick leave bank are a on a strictly voluntary basis.

   d. Employees must respond to requests for sick leave donations by the posted deadline in order to donate.

   e. Employees may only make one (1) sick leave donation request for each FMLA qualifying event which will result in an extended absence from work.

   f. The employee will not earn any accruals while receiving sick leave donations.

   g. Donated sick time will be paid at the receiving employee's rate of pay.

4. Sick Leave Donation Process

   a. An employee with a FMLA qualifying event or on an approved FMLA leave who has exhausted all forms of compensation makes a request for sick leave donations to their immediate supervisor.

   b. The supervisor contacts Human Resources (HR) with the sick leave donation request.

   c. HR will verify that the employee is eligible to request sick leave donations and document the request.

   d. Once verified HR will send out a sick leave donation request to all Leelanau County employees. The request will include the following information:

      i. Employee name

      ii. Department

      iii. Collective bargaining unit (if any)

      iv. Deadline to donate

   e. No sick leave donations will be accepted after the posted deadline.

   f. No sick leave donations will be accepted beyond the requested cap, as determined by Human Resources.

   g. Employees who wish to donate their sick leave must respond to HR by the posted deadline with the name of the employee they wish to donate to and the number of sick leave hours they are donating.

   h. HR will verify that employees who have donated are eligible to donate sick leave and document the request.

   i. Sick leave donations will be utilized on a first come, first donated basis.

   j. All sick leave donations received will be placed into the requesting employee's sick leave accrual bank for their use. If there is a balance upon the employee's return to work, those hours will not be returned to the donating employee and will be placed in an employer managed leave bank for future FMLA leaves.

Per IRS rulings, employees who suffer medical emergencies may qualify to receive leave surrendered to the employer by other employees or leave deposited by its employees in an employer sponsored leave bank. The ruling holds that the amounts paid by the employer to a leave recipient pursuant to the plan are includable in the gross income of the recipient under § 61 of the Code as compensation for services provided by that recipient to the employer. Rev. Rul. 90-29 further concludes that these amounts are

considered “wages” for employment tax purposes, including the Federal Insurance Contributions Act (“FICA”), the Federal Unemployment Tax Act (“FUTA”), the Railroad Retirement Tax Act (“RRTA”), and the Railroad Unemployment Repayment Tax (“RURT”), and for income tax withholding purposes, unless otherwise excluded by a specific provision of the Code. The revenue ruling also holds that an employee who surrenders leave to the employer or deposits leave in the leave bank does not realize any income and incurs no deductible expense or loss either upon surrender or deposit of the leave or its use by the recipient employee.

EXECUTIVE DOCUMENT SUMMARY

Department: Emergency Mgt./911 Contact Person: Matt Ansorge Telephone No.: (231) 256-8775	**Submittal Dates** ☑ Executive Board Session 11/14/2023
Source Selection Method ☒ State Contract ☐ Other: _____ *Account Number (Funds to come from):* _____	**VENDOR:** MSP - EMHSD Address/ Phone: P.O. Box 30634 Lansing, MI 48909

Budgeted Amount: $ 14,030.00 Contracted Amount: $ 14,030.00

Document Description

☒ Grant Application ☐ Other _____

☐ **Request to Waive Board Policy on Bid Requirements**

The State of Michigan is requesting Leelanau County renew the Emergency Management Performance Grant (EMPG) Work Agreement for fiscal year October 1, 2023 through September 30, 2024. The Emergency Management Homeland Security Division (EMHSD) of the Michigan State Police is the fiduciary for EMPG and even though the fiscal year begins October 1, 2023, the deadline to submit the EMPG Work Agreement is November 28, 2023.

The annual EMPG Work Agreement lists the requirements necessary for the Emergency Management Coordinator to fulfill each quarter in order for Leelanau County to receive partial salary and fringe benefit reimbursement for that position.

The Chief Elected Official is asked to sign the attached documents for the EMPG Work Agreement. Also included is an amendment to the FY2021 EMPG Work Agreement (Oct 1, 2021 - Sept 30, 2022) which includes additional ARPA funds passed along by the state to the local jurisdictions. Leelanau County is receiving an additional $5,800 for the FY2021 EMPG Work Agreement. The attached document needs to be amended to that agreement and the County Treasurer and Finance Department need to be aware of the additional incoming funds.

Each quarter, the Leelanau County Office of Emergency Management will report to the state on the progress of fulfilling the requirements of the EMPG Work Agreement. These quarterly reports will also require an electronic signature from the Chairperson of the Leelanau County Board of Commissioners.

Suggested Recommendation: I move to recommend that the County Board of Commissioners approve and allow the Chairman of the Board to sign the FY 23 EMPG Work Agreement and other documents related to this grant agreement, and to amend the FY21 EMPG Work Agreement, and allow the Leelanau County Office of Emergency Management to submit electronic signatures for the required quarterly reports.

Department Head Approval: Matt Ansorge 2023.10.30 09:28:00 -04'00' Date: 10/30/2023

Michigan State Police Emergency Management and Homeland Security Division	Grant Agreement

FEDERAL AWARD IDENTIFICATION

SUBRECIPIENT NAME	GRANT NAME	ASSISTANCE LISTING
County of Leelanau	Emergency Management Performance Grants	97.042
SUBRECIPIENT IRS/VENDOR NUMBER	**FEDERAL AWARD IDENTIFICATION NUMBER (FAIN)**	**FEDERAL AWARD DATE**
46-1385335	EMC-2023-EP-00005	9/12/2023

SUBRECIPIENT UEI		FROM	TO
NGV7GJXHMUZ8	SUBAWARD PERFORMANCE PERIOD	10/1/2022	9/30/2023
	BUDGET PERIOD	10/1/2022	9/30/2023

RESEARCH & DEVELOPMENT	Funding	Total
N/A	Federal Funds Obligated by this Action	$14,030
INDIRECT COST RATE	Total Federal Funds Obligated to Subrecipient	$14,030
None on file	Total Amount of Federal Award Committed	$14,030

FEDERAL AWARD PROJECT DESCRIPTION

2023 Emergency Management Performance Grants (EMPG)

DETAILS

The 2023 EMPG allocation is 21.23% of the Subrecipient's emergency program manager's salary and fringe benefits. A cost-match is required under this program. The Federal share used towards the EMPG budget shall not exceed 50% of the total budget.

FEDERAL AWARDING AGENCY	PASS-THROUGH ENTITY (RECIPIENT) NAME
Federal Emergency Management Agency - GPD 400 C Street, SW, 3rd floor Washington, DC 20472-3645	Michigan State Police Emergency Management and Homeland Security Division PO Box 30634 Lansing, MI 48909

State of Michigan
FY 2023 Emergency Management Performance Grant
Grant Agreement

October 1, 2022 to September 30, 2023

Assistance Listing: 97.042
Grant Number: EMC-2023-EP-00005

This Fiscal Year (FY) 2023 Emergency Management Performance Grant (EMPG) grant agreement is hereby entered into between the Michigan Department of State Police, Emergency Management and Homeland Security Division (hereinafter called the Recipient), and the

COUNTY OF LEELANAU
(hereinafter called the Subrecipient)

I. Purpose

The purpose of this grant agreement is to provide federal pass-through funds to the Subrecipient for the development and maintenance of an emergency management program capable of protecting life, property, and vital infrastructure in times of disaster or emergency.

The FY 2023 EMPG program plays an important role in the implementation of the National Preparedness System (NPS) by supporting the building, sustainment, and delivery of core capabilities essential to achieving the National Preparedness Goal of a secure and resilient Nation. The objective of the NPS is to facilitate an integrated, all-of-nation/whole community, risk driven, capabilities-based approach to preparedness.

In support of the National Preparedness Goal, the FY 2023 EMPG supports a comprehensive, all-hazard emergency preparedness system to build and sustain core capabilities across the Prevention, Protection, Mitigation, Response, and Recovery mission areas.

For more information on the NPS, federally designated priorities, and the FY 2023 EMPG objectives, as well as guidance on allowable costs and program activities, please refer to the FY 2023 EMPG Notice of Funding Opportunity (NOFO) and the Federal Emergency Management Agency (FEMA) Preparedness Grants Manual located at https://www.fema.gov/grants.

II. Statutory Authority

Funding for the FY 2023 EMPG is authorized by Section 662 of the *Post-Katrina Emergency Management Reform Act of 2006* (PKEMRA), as amended, (Pub. L. No. 109-295) (6 U.S.C. § 762); the *Robert T. Stafford Disaster Relief and Emergency Assistance Act*, as amended (Pub. L. No. 93-288) (42 U.S.C. §§ 5121 et seq.); the *Earthquake Hazards Reduction Act of 1977, as amended* (Pub. L. No. 95-124) (42 U.S.C. §§ 7701 et seq.); and the *National Flood Insurance Act of 1968*, as amended (Pub. L. No. 90448) (42 U.S.C. §§ 4001 et seq.).

Appropriation authority is provided by the *Consolidated Appropriates Act, 2023* (Pub. L. No. 117-328; *Compact of Free Association Amendments Act of 2003* (Pub. L. No. 108-188 (2003)).

The Subrecipient agrees to comply with all FY 2023 EMPG program requirements in accordance with the FY 2023 EMPG NOFO, and the FY 2023 FEMA Preparedness Grants Manual; both are located at https://www.fema.gov/grants/preparedness/emergency-management-performance; the *Michigan*

Emergency Management Act of 1976, as amended (Public Act 390) at http://www.legislature.mi.gov/doc.aspx?mcl-Act-390-of-1976; the *Robert T. Stafford Disaster Relief and Emergency Assistance Act,* as amended (Pub. L. No. 93-288) (42 U.S.C. §§ 5121 et seq.) located at https://www.fema.gov/disaster/stafford-act; and the *FY 2023 EMPG Agreement Articles Applicable to Subrecipients*. The *FY 2023 EMPG Agreement Articles Applicable to Subrecipients* document is included for reference in the grant agreement packet.

The Subrecipient shall also comply with the most recent version of:

A. 2 CFR, Part 200 of the Code of Federal Regulations (CFR), *Uniform Administrative Requirements, Cost Principles, and Audit Requirements for Federal Awards* located at http://www.ecfr.gov.

B. The FEMA Policy #108-023-1 *Grant Programs Directorate Environmental Planning and Historic Preservation Policy Guidance*.

III. Award Amount and Restrictions

A. The **County of Leelanau** is awarded **$14,030** or **21.23**% of the Subrecipients local emergency manager's salary and fringe benefits under the **FY 2023 EMPG**. The Subrecipient may receive less than the allocated amount if the Subrecipient's cost share (match) of wages and fringe benefits paid to the local emergency manager are less than the total allocation. The Subrecipient's EMPG program budget must be documented on the Local Budget for Emergency Management Performance Grant form (EMHSD-17).

B. The FY 2023 EMPG covers eligible costs from October 1, 2022, to September 30, 2023. The funds awarded in the grant agreement shall only be used to cover allowable costs that are incurred during the agreement period. Grant funds shall not be used for other purposes. For guidance on allowable costs, please refer to the EMPG Appendix in the FEMA Preparedness Grants Manual.

C. This grant agreement designates EMPG funds for the administration and oversight of an approved emergency management program. **The Subrecipient may utilize grant funds for the reimbursement of salary, overtime, compensatory time off, and associated fringe benefits for the local emergency manager**. Up to 5% of the total allocation may be utilized for other allowable organization costs after all payroll costs for the grant award year have been reimbursed. No other expenditures are allowed. If other organization costs are requested, a narrative must be submitted detailing the expenses that are included in these costs.

D. The FY 2023 EMPG program has a 50% cost share (cash or in-kind) requirement, as authorized by the *Robert T. Stafford Disaster Relief and Emergency Assistance Act,* as amended, (Pub. L. No. 93-288) (42 U.S.C. §§ 5121 et seq.), specifically, Title VI, sections 611(j) and 613. Federal funds cannot exceed 50% of eligible costs. Unless otherwise authorized by law, federal funds cannot be matched with other federal funds.

   The FEMA administers cost sharing requirements in accordance with 2 CFR § 200.306. To meet matching requirements, the Subrecipient contributions must be reasonable, allowable, allocable, and necessary under the grant program and must comply with all federal requirements and regulations.

   See the FY 2023 EMPG NOFO and FEMA Preparedness Grants Manual for additional cost share guidance, definitions, basic guidelines, and governing provisions.

E. All EMPG funded personnel must complete either the Independent Study courses identified in the Professional Development Series, or the National Emergency Management Basic Academy delivered either by the Emergency Management Institute or a sponsored state, local, tribal, territorial, regional, or other designated location and record proof of completion. All EMPG funded personnel must also participate in exercises consistent with the requirements outlined in the EMPG Guidebook and work agreement.

   The EMPG funded programs are required to complete a quarterly training and exercise report identifying training and exercises completed during the quarter. Guidance for accomplishing these requirements is provided by the Recipient.

F. Upon request, the Subrecipient must provide to the Recipient information necessary to meet any state or federal subaward reporting requirements.

G. In the event that the U.S. Department of Homeland Security (DHS) determines that changes are necessary to the award document after an award has been made, including but not limited to, changes to period of performance or terms and conditions, Subrecipients will be notified of the changes in writing. Once notification has been made, any subsequent request for funds will indicate Subrecipient acceptance of the changes to the award.

IV. Responsibilities of the Subrecipient

A. **Grant funds must supplement, not supplant, state or local funds**. Federal funds must be used to supplement existing funds, not replace (supplant) funds that have been appropriated for the same purpose. Potential supplanting will be carefully reviewed in subsequent monitoring reviews and audits. Subrecipients may be required to supply documentation certifying that a reduction in non-federal resources occurred for reasons other than the receipt or expected receipt of federal funds.

B. The Subrecipient agrees to comply with all applicable federal and state regulations; the FY 2023 EMPG NOFO; the FEMA FY 2023 Preparedness Grants Manual; the FY 2023 EMPG *Agreement Articles Applicable to Subrecipients,* included with the grant agreement package for reference*;* and the EMPG Guidebook (EMD-PUB 208).

C. The subrecipient shall not use FY 2023 EMPG funds to generate program income.

D. In addition to this grant agreement, the Subrecipient shall complete, sign, and submit to the Recipient the following documents, which are incorporated by reference into this grant agreement:
   1. Subrecipient Risk Assessment Certification.
   2. Standard Assurances.
   3. Certifications Regarding Lobbying; Debarment, Suspension and Other Responsibility Matters; and Drug-Free Workplace Requirements.
   4. Audit Certification (EMD-053).
   5. Request for Taxpayer Identification Number and Certification (W-9).
   6. Other documents that may be required by federal or state officials.

E. Complete and submit quarterly work reports, the Quarterly Training and Exercise Worksheet, and the Annual Training and Exercise Plan Worksheet in accordance with the schedule outlined in the FY 2023 EMPG Work Agreement/Quarterly Report (EMHSD-31).

F. Enact enabling legislation establishing the local emergency management program and ensure a copy of the local resolution or ordinance is on file with the Recipient.

G. Appoint an emergency management program manager who can assume responsibility for the functions outlined in section 4 of the EMPG Guidebook.

H. Provide the Recipient with a complete job description for the federally funded EMPG local emergency manager, including non-EMPG duties if applicable.

I. Notify the Recipient immediately of any changes in the EMPG funded local emergency manager's position.

J. The Subrecipient will contribute to the development and maintenance of the state's multi-year Training and Exercise Plan. This will include conducting exercises that comply with local, state, and federal requirements, including the Homeland Security Exercise and Evaluation Program and the EMPG Guidebook, to accomplish this goal.

K. Ensure the EMPG funded local emergency manager completes training as required by the annual EMPG Work Agreement.

L. Have an approved and current emergency operations plan on file with the Michigan State Police, Emergency Management and Homeland Security Division (MSP/EMHSD) District Coordinator.

M. The Subrecipient agrees to prepare the form EMHSD-007 - EMPG Quarterly Billing Cover Sheet. The Subrecipient agrees to submit this form with supporting documentation, including all required authorized signatures and required reimbursement documentation to the appropriate MSP/EMHSD District Coordinator by the due date following the end of **each** quarter, as identified in FY 2023 Emergency Management Report Schedule. The most current EMHSD-007 form must be used and can be obtained from the MSP/EMHSD District Coordinator, or by visiting https://www.michigan.gov/msp/0,4643,7-123-72297_60152_95164_95317---,00.html under Finance Forms.

N. Comply with applicable financial and administrative requirements set forth in the current edition of 2 CFR, Part 200, including, but not limited to, the following provisions:
   1. Account for receipts and expenditures, maintain adequate financial records, and refund expenditures disallowed by federal or state audit.
   2. Retain all financial records, statistical records, supporting documents, and other pertinent materials for at least three years after the grant is closed by the awarding federal agency for purposes of federal and/or state examination and audit.
   3. Non-federal organizations which expend $750,000 or more in all federal funds during their current fiscal year are required to have an audit performed in accordance with the Single Audit requirements under 2 CFR, Part 200, Subpart F.

O. Comply with all reporting requirements, including special reporting, data collection, and evaluation requirements, as prescribed by law or program guidance.

P. Maintain a valid Unique Entity Identifier through SAM.gov at all times during the performance period of this grant.

Q. The Subrecipient must acknowledge and agree to comply with applicable provisions governing the DHS access to records, accounts, documents, information, facilities, and staff. The Subrecipient also agrees to require any subrecipients, contractors, successors, transferees, and assignees to acknowledge and agree to comply with these same provisions. Detailed information on record access provisions can be found in the *DHS Standard Administrative Terms and Conditions* located at https://www.dhs.gov/publication/fy15-dhs-standard-terms-and-conditions, specifically in the DHS General Acknowledgements and Assurances on page 1..

R. Subrecipients must carry out their programs and activities in a manner that respects and ensures the protection of civil rights for protected populations. These populations include but are not limited to individuals with disabilities and others with access and functional needs, individuals with limited English proficiency, and other diverse racial and ethnic populations, in accordance with Section 504 of the *Rehabilitation Act of 1973*, Title VI of the *Civil Rights Act of 1964*, and Executive Order (EO) 13347.

S. Comply with the Build America, Buy America provisions of the Infrastructure Investment and Jobs Act and EO 14005.

V. Responsibilities of the Recipient

The Recipient, in accordance with the general purposes and objectives of this grant agreement, will:

A. Administer the grant in accordance with all applicable federal and state regulations and guidelines and submit required reports to the awarding federal agency.

B. Provide direction and technical assistance to the Subrecipient.

C. Provide to the Subrecipient any special report forms and reporting formats (templates) required for administration of the program.

D. Reimburse the Subrecipient, in accordance with this grant agreement, based on appropriate documentation submitted by the Subrecipient.

E. At its discretion, independently, or in conjunction with the federal awarding agency, conduct random on-site reviews of the Subrecipient(s).

VI. Reporting Procedures

A. The Subrecipient agrees to prepare quarterly work reports using the FY 2023 EMPG Work Agreement/Quarterly Report (EMHSD-31) and submit them through EMHSD's online reporting tool by the due date following the end of **each** quarter. Reimbursement of expenditures by the Recipient is contingent upon the Subrecipient's completion of scheduled work activities. Reporting periods and due dates are listed in the FY 2023 EMPG Work Agreement/Quarterly Report (EMHSD-31). The FY 2023 EMPG Work Agreement can be located at www.michigan.gov/emhsd under Grants Programs, EMPG.

B. If the Subrecipient fails to complete the scheduled work activities during a quarter, the Recipient will withhold reimbursement until either the work is completed, or the Deputy State Director of Emergency Management approves a delay in the completion of the activity. Forfeiture of funds may result if scheduled work activities are not completed according to established deadlines.

C. A Subrecipient that fails to complete the annual exercise requirements, as scheduled within the FY 2023 EMPG Work Agreement/Quarterly Report, may be ineligible for EMPG funding for that quarter and all subsequent quarters.

D. The Subrecipient's failure to fulfill the quarterly reporting requirements, as required by the grant, may result in the suspension or loss of grant funding.

VII. Payment Procedures

A. The Subrecipient agrees to prepare the form EMHSD-007 - EMPG Quarterly Billing Cover Sheet. The Subrecipient agrees to submit this form with supporting documentation, including all required

authorized signatures and required reimbursement documentation, to the MSP/EMHSD District Coordinator by the due date following the end of **each** quarter, as identified in FY 2023 Emergency Management Report Schedule. The most current EMHSD-007 form must be used and can be obtained from the MSP/EMHSD District Coordinator, or by visiting www.michigan.gov/emhsd under Grant Programs, EMPG, Grant Forms, Finance Forms.

B. If the Subrecipient submits required quarterly reports that are late or incomplete, the reimbursement may not be processed until the following quarter. Forfeiture of funds may result if quarterly reports are not completed according to established deadlines.

C. The Subrecipient agrees to return to the Recipient any unobligated balance of funds held by the Subrecipient at the end of the agreement period or handle them in accordance with the instructions provided by the Recipient.

VIII. Employment Matters

The Subrecipient shall comply with Title VI of the *Civil Rights Act of 1964*, as amended; Title VIII of the *Civil Rights Act of 1968*; Title IX of the *Education Amendments of 1972 (Equal Opportunity in Education Act)*; the *Age Discrimination Act of 1975*; Titles I, II and III of the *Americans with Disabilities Act of 1990*; the *Elliott-Larsen Civil Rights Act*, 1976 PA 453, as amended, MCL 37.2101 *et seq*.; the *Persons with Disabilities Civil Rights Act*, 1976 PA 220, as amended, MCL 37.1101 *et seq*., and all other federal, state and local fair employment practices and equal opportunity laws and covenants. The Subrecipient shall not discriminate against any employee or applicant for employment, to be employed in the performance of this grant agreement, with respect to their hire, tenure, terms, conditions, or privileges of employment; or any matter directly or indirectly related to employment because of their race, religion, color, national origin, age, sex, height, weight, marital status, limited English proficiency, or handicap that is unrelated to the individual's ability to perform the duties of a particular job or position. The Subrecipient agrees to include in every contract or subcontract entered into for the performance of this grant agreement this covenant not to discriminate in employment. A breach of this covenant is a material breach of the grant agreement.

The Subrecipient shall ensure that no subcontractor, manufacturer, or supplier of the Subrecipient for projects related to this grant agreement appears on the Federal Excluded Parties List System located at https://www.sam.gov.

IX. Limitation of Liability

The Recipient and the Subrecipient to this grant agreement agree that each must seek its own legal representative and bear its own costs, including judgments, in any litigation that may arise from performance of this contract. It is specifically understood and agreed that neither party will indemnify the other party in such litigation.

This is not to be construed as a waiver of governmental immunity for either party.

X. Third Parties

This grant agreement is not intended to make any person or entity, not a party to this grant agreement, a third party beneficiary hereof or to confer on a third party any rights or obligations enforceable in their favor.

XI. Grant Agreement Period

This grant agreement is in full force and effect from October 1, 2022, to September 30, 2023. No costs eligible under this grant agreement shall be incurred before the starting date of this grant agreement,

except with prior written approval. This grant agreement may be terminated by either party by giving 30 days written notice to the other party stating reasons for termination and the effective date, or upon the failure of either party to carry out the terms of the grant agreement. Upon any such termination, the Subrecipient agrees to return to the Recipient any funds not authorized for use, and the Recipient shall have no further obligation to reimburse the Subrecipient.

XII. Entire Grant Agreement

This grant agreement is governed by the laws of the state of Michigan and supersedes all prior agreements, documents, and representations between the Recipient and the Subrecipient, whether expressed, implied, or oral. This grant agreement constitutes the entire agreement between the parties and may not be amended except by written instrument executed by both parties prior to the grant end date. No party to this grant agreement may assign this grant agreement or any of their rights, interest, or obligations hereunder without the prior consent of the other party. The Subrecipient agrees to inform the Recipient in writing immediately of any proposed changes of dates, budget, or services indicated in this grant agreement, as well as changes of address or personnel affecting this grant agreement. Changes in dates, budget, or services are subject to prior written approval of the Recipient. If any provision of this grant agreement shall be deemed void or unenforceable, the remainder of the grant agreement shall remain valid.

The Recipient may suspend or terminate grant funding to the Subrecipient, in whole or in part, or other measures may be imposed for any of the following reasons:

A. Failure to expend funds in a timely manner consistent with the grant milestones, guidance, and assurances.
B. Failure to comply with the requirements or statutory objectives of federal or state law.
C. Failure to make satisfactory progress toward the goals or objectives set forth in the annual EMPG Work Agreement.
D. Failure to follow grant agreement requirements or special conditions.
E. Failure to submit required reports.
F. Filing of a false certification in the application or other reports or documents.

Before taking action, the Recipient will provide the Subrecipient reasonable notice of intent to impose corrective measures and will make every effort to resolve the problem informally.

XIII. Business Integrity Clause

The Recipient may immediately cancel the grant without further liability to the Recipient or its employees if the Subrecipient, an officer of the Subrecipient, or an owner of a 25% or greater share of the Subrecipient is convicted of a criminal offense incident to the application for or performance of a state, public, or private grant or subcontract; or convicted of a criminal offense, including, but not limited to any of the following: embezzlement, theft, forgery, bribery, falsification or destruction of records, receiving stolen property, attempting to influence a public employee to breach the ethical conduct standards for State of Michigan employees; convicted under state or federal antitrust statutes; or convicted of any other criminal offense which, in the sole discretion of the Recipient, reflects on the Subrecipient's business integrity.

XIV. Freedom of Information Act

Much of the information submitted in the course of applying for funding under this program, or provided in the course of grant management activities, may be considered law enforcement-sensitive or otherwise critical to national security interests. This may include threat, risk, and needs assessment information, and discussions of demographics, transportation, public works, and industrial and public health infrastructures. Therefore, each Subrecipient agency Freedom of Information Officer will need to determine what information is to be withheld on a case-by-case basis. The Subrecipient should be

familiar with the regulations governing Protected Critical Infrastructure Information (6 CFR, Part 29) and Protection of Sensitive Security Information (49 CFR, Part 1520), as these designations may provide additional protection to certain classes of homeland security information.

XV. Official Certification

For the Subrecipient

The individual or officer signing this grant agreement certifies by their signature that they are authorized to sign this grant agreement on behalf of the organization they represent. The Subrecipient agrees to complete all requirements specified in this grant agreement.

County of Leelanau	NGV7GJXHMUZ8
Subrecipient Name	Subrecipient UEI

For the Chief Elected Official

Ty Wessell	Chariman, Leelanau County Board of Commissioners
Printed Name	Title
	November 22, 2023
Signature	Date

For the Local Emergency Manager

Matt Ansorge	Director of Emergency Management/9-1-1
Printed Name	Title
	November 22, 2023
Signature	Date

For the Recipient (Michigan State Police, Emergency Management and Homeland Security Division)

Capt. Kevin Sweeney,	Commander, Emergency Management and Homeland Security Division
Printed Name	Title
	9-20-23
Signature	Date

EMHSD-31 Michigan State Police Emergency Management and Homeland Security Division	**Leelanau County** **Emergency Management** Fiscal Year 2023 **Emergency Management Performance Grant (EMPG)** **Work Agreement/Quarterly Report**		☒ Initial Work Agreement
☐ 1st Quarter	☐ 2nd Quarter	☐ 3rd Quarter	☐ 4th Quarter

SIGNATURE OF CHIEF ELECTED OFFICIAL	DATE	SIGNATURE OF EMERGENCY MANAGEMENT COORDINATOR	DATE
	11/21/2023		11/22/2023
SIGNATURE OF EMERGENCY MGMT. PROGRAM MANAGER	DATE	SIGNATURE OF DISTRICT COORDINATOR	DATE
	11/22/2023		

Purpose

This survey functions as the 2022 EMPG work agreement/quarterly report. The objectives of this work agreement are based upon standards identified in the Michigan State Police, Emergency Management and Homeland Security Division (MSP/EMHSD) Publication 206 - Local Emergency Management Program Standards Workbook. Activities for each objective have been determined by a group of local and state emergency management subject matter experts who maintain a baseline set of standards for emergency management programs in the state of Michigan. Survey responses will assist in the assessment of emergency management programs, determine how EMPG funds are utilized and help validate the importance of these emergency management activities to all levels of government.

(1) ADMINISTRATION AND FINANCE

The Emergency Management Coordinator (EMC) shall ensure that the jurisdiction promulgates laws, ordinances, resolutions, policies, and procedures to carry out emergency financial and administrative responsibilities. The EMPG funded emergency manager shall provide a copy of their job description(s) that incorporate their Emergency Management (EM) activities. EM activities of the EMC and other response personnel shall be identified in the EM ordinance, resolution, and county plans.

	Planned Activities	Action Taken (Local EM Status Report)
1st	▪ Verify that the jurisdiction submitted the previous quarter's EMPG work agreement/quarterly report timely, and that the current quarterly EMPG work agreement/report, with signatures, will be submitted by 1/10/23.	EMPG work agreement/quarterly report was submitted: Yes/No

EMHSD-053 (09/2023)
Michigan State Police
Emergency Management and Homeland Security Division

AUTHORITY: MCL 30.407a and 2 CFR Part 200, Subpart F;
COMPLIANCE: Voluntary, but necessary to be considered for grant assistance.

AUDIT CERTIFICATION

Federal Audit Requirements

Non-federal organizations, which expend $750,000 or more in federal funds during their current fiscal year, are required to have an audit performed in accordance with 2 CFR Part 200, Subpart F.

Subrecipients MUST email a copy of their audit report for each year they meet the funding threshold to: MSP-EMHSD-Audit@michigan.gov.

I. Program Information			
Program Name **County of Leelanau**	CFDA Number **97.042**		
II. Subrecipient Information			
Subrecipient Name **County of Leelanau**			
Street Address **8525 E. Government Center Drive**	City **Suttons Bay**	State **MI**	ZIP Code **49682**
III. Certification for Fiscal Year			

Subrecipient Fiscal Year Period: **2023** to **2024**.

☐ I certify that the subrecipient shown above does NOT expect it will be required to have an audit performed under 2 CFR Part 200, Subpart F, for the above listed program.

☒ I certify that the subrecipient shown above expects it will be required to have an audit performed under 2 CFR Part 200, Subpart F, during at least one fiscal year funds are received for the above listed program. **A copy of the audit report will be submitted to**: A copy of the audit report will be submitted by email to: MSP-EMHSD-Audit@michigan.gov.

Signature of Subrecipient's Authorized Representative	**Date**
	11/22/2023

Email audit report to:
MSP-EMHSD-Audit@michigan.gov

Submit this completed audit certification form and return with your grant agreement.

U.S. DEPARTMENT OF JUSTICE
OFFICE OF JUSTICE PROGRAMS
OFFICE OF THE COMPTROLLER

CERTIFICATIONS REGARDING LOBBYING; DEBARMENT, SUSPENSION AND OTHER RESPONSIBILITY MATTERS; AND DRUG-FREE WORKPLACE REQUIREMENTS

Applicants should refer to the regulations cited below to determine the certification to which they are required to attest. Applicants should also review the instructions for certification included in the regulations before completing this form. Signature of this form provides for compliance with certification requirements under 28 CFR Part 69, "New Restrictions on Lobbying" and 28 CFR Part 67, "Government-wide Debarment and Suspension (Nonpro-curement) and Government-wide Requirements for Drug-Free Workplace (Grants)." The certifications shall be treated as a material representation of fact upon which reliance will be placed when the Department of Justice determines to award the covered transaction, grant, or cooperative agreement.

1. LOBBYING

As required by Section 1352, Title 31 of the U.S. Code, and implemented at 28 CFR Part 69, for persons entering into a grant or cooperative agreement over $100,000, as defined at 28 CFR Part 69, the applicant certifies that:

(a) No Federal appropriated funds have been paid or will be paid, by or on behalf of the undersigned, to any person for influencing or attempting to influence an officer or employee of any agency, a Member of Congress, an officer or employee of Congress, or an employee of a Member of Congress in connection with the making of any Federal grant, the entering into of any cooperative agreement, and the extension, continuation, renewal, amendment, or modification of any Federal grant or cooperative agreement;

(b) If any funds other than Federal appropriated funds have been paid or will be paid to any person for influencing or attempting to influence an officer or employee of any agency, a Member of Congress, an officer or employee of Congress, or an employee of a Member of Congress in connection with this Federal grant or cooperative agreement, the undersigned shall complete and submit Standard Form - LLL, "Disclosure of Lobbying Activities," in accordance with its instructions;

(c) The undersigned shall require that the language of this certification be included in the award documents for all subawards at all tiers (including subgrants, contracts under grants and cooperative agreements, and subcontracts) and that all subrecipients shall certify and disclose accordingly.

2. DEBARMENT, SUSPENSION, AND OTHER RESPONSIBILITY MATTERS (DIRECT RECIPIENT)

As required by Executive Order 12549, Debarment and Suspension, and implemented at 28 CFR Part 67, for prospective participants in primary covered transactions, as defined at 28 CFR Part 67, Section 67.510—

A. The applicant certifies that it and its principals:

(a) Are not presently debarred, suspended, proposed for debarment, declared ineligible, sentenced to a denial of Federal benefits by a State or Federal court, or voluntarily excluded from covered transactions by any Federal department or agency;

(b) Have not within a three-year period preceding this application been convicted of or had a civil judgment rendered against them for commission of fraud or a criminal offense in connection with obtaining, attempting to obtain, or performing a public (Federal, State, or local) transaction or contract under a public transaction; violation of Federal or State antitrust statutes or commission of embezzlement, theft, forgery, bribery, falsification or destruction of records, making false statements, or receiving stolen property;

(c) Are not presently indicted for or otherwise criminally or civilly charged by a governmental entity (Federal, State, or local) with commission of any of the offenses enumerated in paragraph (1)(b) of this certification; and

(d) Have not within a three-year period preceding this application had one or more public transactions (Federal, State, or local) terminated for cause or default; and

B. Where the applicant is unable to certify to any of the statements in this certification, he or she shall attach an explanation to this application.

3. DRUG-FREE WORKPLACE (GRANTEES OTHER THAN INDIVIDUALS)

As required by the Drug-Free Workplace Act of 1988, and implemented at 28 CFR Part 67, Subpart F, for grantees, as defined at 28 CFR Part 67 Sections 67.615 and 67.620—

A. The applicant certifies that it will or will continue to provide a drug-free workplace by:

(a) Publishing a statement notifying employees that the unlawful manufacture, distribution, dispensing, possession, or use of a controlled substance is prohibited in the grantee's workplace and specifying the actions that will be taken against employees for violation of such prohibition;

(b) Establishing an on-going drug-free awareness program to inform employees about—

(1) The dangers of drug abuse in the workplace;

(2) The grantee's policy of maintaining a drug-free workplace;

(3) Any available drug counseling, rehabilitation, and employee assistance programs; and

(4) The penalties that may be imposed upon employees for drug abuse violations occurring in the workplace;

(c) Making it a requirement that each employee to be engaged in the performance of the grant be given a copy of the statement required by paragraph (a);

(d) Notifying the employee in the statement required by paragraph (a) that, as a condition of employment under the grant, the employee will—

OJP FORM 4061/6 (3-91) REPLACES OJP FORMS 4061/2, 4061/3 AND 4061/4 WHICH ARE OBSOLETE.

(1) Abide by the terms of the statement; and

(2) Notify the employer in writing of his or her conviction for a violation of a criminal drug statute occurring in the workplace no later than five calendar days after such conviction;

(e) Notifying the agency, in writing, within 10 calendar days after receiving notice under subparagraph (d)(2) from an employee or otherwise receiving actual notice of such convic-tion. Employers of convicted employees must provide notice, including position title, to: Department of Justice, Office of Justice Programs, ATTN: Control Desk, 633 Indiana Avenue, N.W., Washington, D.C. 20531. Notice shall include the identification number(s) of each affected grant;

(f) Taking one of the following actions, within 30 calendar days of receiving notice under subparagraph (d)(2), with respect to any employee who is so convicted—

(1) Taking appropriate personnel action against such an employee, up to and including termination, consistent with the requirements of the Rehabilitation Act of 1973, as amended; or

(2) Requiring such employee to participate satisfactorily in a drug abuse assistance or rehabilitation program approved for such purposes by a Federal, State, or local health, law enforcement, or other appropriate agency;

(g) Making a good faith effort to continue to maintain a drug-free workplace through implementation of paragraphs (a), (b), (c), (d), (e), and (f).

B. The grantee may insert in the space provided below the site(s) for the performance of work done in connection with the specific grant:

Place of Performance (Street address, city, county, state, zip code)

Check ☐ if there are workplaces on file that are not indentified here.

Section 67, 630 of the regulations provides that a grantee that is a State may elect to make one certification in each Federal fiscal year. A copy of which should be included with each application for Department of Justice funding. States and State agencies may elect to use OJP Form 4061/7.

Check ☐ if the State has elected to complete OJP Form 4061/7.

DRUG-FREE WORKPLACE (GRANTEES WHO ARE INDIVIDUALS)

As required by the Drug-Free Workplace Act of 1988, and implemented at 28 CFR Part 67, Subpart F, for grantees, as defined at 28 CFR Part 67; Sections 67.615 and 67.620—

A. As a condition of the grant, I certify that I will not engage in the unlawful manufacture, distribution, dispensing, possession, or use of a controlled substance in conducting any activity with the grant; and

B. If convicted of a criminal drug offense resulting from a violation occurring during the conduct of any grant activity, I will report the conviction, in writing, within 10 calendar days of the conviction, to: Department of Justice, Office of Justice Programs, ATTN: Control Desk, 810 Seventh Street NW., Washington, DC 20531.

As the duly authorized representative of the applicant, I hereby certify that the applicant will comply with the above certifications.

1. Grantee Name and Address:

County of Leelanau
8525 E. Government Center Drive
Suttons Bay, MI 49682

2. Application Number and/or Project Name

Emergency Management Performance Grants
EMC-2023-EP-00005

3. Grantee IRS/Vendor Number

46-1385335

4. Typed Name and Title of Authorized Representative

Ty Wessell - Chairman, Leelanau County Board of Commissioners

5. Signature

6. Date

November 21, 2023

*U.S. Government Printing Office: 1996 - 405-037/40014

OMB APPROVAL NO. 1121-140
EXPIRES 5/31/2019

STANDARD ASSURANCES

The Applicant hereby assures and certifies compliance with all applicable Federal statutes, regulations, policies, guidelines, and requirements, including 2 C.F.R. Part 2800 (Uniform Administrative Requirements, Cost Principles, and Audit Requirements for Federal Awards by the Department of Justice), and Ex. Order 12372 (intergovernmental review of federal programs). The applicant also specifically assures and certifies that:

1. It has the legal authority to apply for federal assistance and the institutional, managerial, and financial capability (including funds sufficient to pay any required non-federal share of project cost) to ensure proper planning, management, and completion of the project described in this application.

2. It will establish safeguards to prohibit employees from using their positions for a purpose that constitutes or presents the appearance of personal or organizational conflict of interest, or personal gain.

3. It will give the awarding agency or the Government Accountability Office, through any authorized representative, access to and the right to examine all paper or electronic records related to the financial assistance.

4. It will comply with all lawful requirements imposed by the awarding agency, specifically including any applicable regulations, such as 28 C.F.R. pts. 18, 22, 23, 30, 35, 38, 42, 61, and 63, and the award term in 2 C.F.R. § 175.15(b).

5. It will assist the awarding agency (if necessary) in assuring compliance with section 106 of the National Historic Preservation Act of 1966 (16 U.S.C. § 470), Ex. Order 11593 (identification and protection of historic properties), the Archeological and Historical Preservation Act of 1974 (16 U.S.C. § 469a-1 et seq.), and the National Environmental Policy Act of 1969 (42 U.S.C. § 4321).

6. It will comply (and will require any subrecipients or contractors to comply) with any applicable nondiscrimination provisions, which may include the Omnibus Crime Control and Safe Streets Act of 1968 (42 U.S.C. § 3789d); the Victims of Crime Act (42 U.S.C. §10604(e)); the Juvenile Justice and Delinquency Prevention Act of 2002 (42 U.S.C. § 5672(b)); the Violence Against Women Act (42 U.S.C. § 13925(b)(13)); the Civil Rights Act of 1964 (42 U.S.C. § 2000d); the Indian Civil Rights Act (25 U.S.C. §§ 1301-1303); the Rehabilitation Act of 1973 (29 U.S.C. § 794); the Americans with Disabilities Act of 1990 (42 U.S.C. §§ 12131-34); the Education Amendments of 1972 (20 U.S.C. §§ 1681, 1683, 1685-86); and the Age Discrimination Act of 1975 (42 U.S.C. §§ 6101-07). It will also comply with Ex. Order 13279, Equal Protection of the Laws for Faith-Based and Community Organizations; Executive Order 13559, Fundamental Principles and Policymaking Criteria for Partnerships With Faith-Based and Other Neighborhood Organizations; and the DOJ implementing regulations at 28 C.F.R. Part 38.

7. If a governmental entity–

a) it will comply with the requirements of the Uniform Relocation Assistance and Real Property

Acquisitions Act of 1970 (42 U.S.C.§ 4601 et seq.), which govern the treatment of persons displaced as a result of federal and federally-assisted programs; and

b) it will comply with requirements of 5 U.S.C.§§ 1501-08 and §§7324-28, which limit certain political activities of State or local government employees whose principal employment is in connection with an activity financed in whole or in part by federal assistance.

November 22, 2023

Signature

Date

EMHSD-RA (06/2022)
MICHIGAN STATE POLICE
Emergency Management and Homeland Security Division

SUBRECIPIENT RISK ASSESSMENT CERTIFICATION

As required by 2 CFR §200.331(b), the purpose of this assessment is to evaluate subrecipient's risk of noncompliance with federal statutes, regulations, and the terms and conditions of a subaward, and to determine appropriate subrecipient monitoring during the grant performance period. Limited program experience, results of previous audits and site monitoring visits, new personnel or new or substantially changed systems, may increase a subrecipient's degree of risk.

Subrecipient:	County:	UEI:
County of Leelanau	Leelanau	NGV7GJXHMUZ8

Questions

1. How many federal grant awards has your organization managed in the past 5 years regardless of awarding agency?
   - ☐ No grants
   - ☐ 1-3 grants
   - ☐ 4-5 grants
   - ☑ 6+ grants

2. What percentage of your grant management staff has fewer than 2 years of grant experience?
   - ☑ 0-25% of staff
   - ☐ 26-50% of staff
   - ☐ 51-75% of staff
   - ☐ 76-100% of staff

3. Has your organization had a new or substantially changed financial/accounting system(s) in the past 2 years?
   - ☐ Yes
   - ☑ No

4. What types of findings (audit, site monitoring, etc.) has your organization received within the past 5 years? **(*Attach a separate sheet explaining any findings resulting in questioned costs or a return of funds.*)**
   - ☑ Never Audited or No findings
   - ☐ Unsupported costs (lack of documentation)
   - ☐ Unreasonable use of funds
   - ☐ Questioned costs or required to return funds

5. Does your agency have staff primarily dedicated (>50%) to grants management activities?
   - ☐ Yes
   - ☑ No

Certification

I certify the information provided in this assessment is true and accurate, and that all occurrences of prior grant non-compliance have been disclosed.

Authorized Representative Signature:		Date: 11/21/2023
Authorized Representative Printed Name: Ty Wessell		Title: Chairman, Leelanau County Board of Commissioners
Point of Contact Printed Name: Matt Ansorge	Title: Director EM/9-1-1	Email: mansorge@leelanau.gov

Form **W-9**
(Rev. October 2018)
Department of the Treasury
Internal Revenue Service

Request for Taxpayer Identification Number and Certification

▶ Go to *www.irs.gov/FormW9* for instructions and the latest information.

Give Form to the requester. Do not send to the IRS.

Print or type. See Specific Instructions on page 3.

1 Name (as shown on your income tax return). Name is required on this line; do not leave this line blank.
Leelanau County

2 Business name/disregarded entity name, if different from above

3 Check appropriate box for federal tax classification of the person whose name is entered on line 1. Check only **one** of the following seven boxes.

☐ Individual/sole proprietor or single-member LLC ☐ C Corporation ☐ S Corporation ☐ Partnership ☐ Trust/estate

☐ Limited liability company. Enter the tax classification (C=C corporation, S=S corporation, P=Partnership) ▶ _____

Note: Check the appropriate box in the line above for the tax classification of the single-member owner. Do not check LLC if the LLC is classified as a single-member LLC that is disregarded from the owner unless the owner of the LLC is another LLC that is **not** disregarded from the owner for U.S. federal tax purposes. Otherwise, a single-member LLC that is disregarded from the owner should check the appropriate box for the tax classification of its owner.

☒ Other (see instructions) ▶

4 Exemptions (codes apply only to certain entities, not individuals; see instructions on page 3):

Exempt payee code (if any) _____

Exemption from FATCA reporting code (if any) _____

(Applies to accounts maintained outside the U.S.)

5 Address (number, street, and apt. or suite no.) See instructions.

Requester's name and address (optional)

6 City, state, and ZIP code

7 List account number(s) here (optional)

Part I Taxpayer Identification Number (TIN)

Enter your TIN in the appropriate box. The TIN provided must match the name given on line 1 to avoid backup withholding. For individuals, this is generally your social security number (SSN). However, for a resident alien, sole proprietor, or disregarded entity, see the instructions for Part I, later. For other entities, it is your employer identification number (EIN). If you do not have a number, see *How to get a TIN,* later.

Note: If the account is in more than one name, see the instructions for line 1. Also see *What Name and Number To Give the Requester* for guidelines on whose number to enter.

Social security number

☐☐☐ – ☐☐ – ☐☐☐☐

or

Employer identification number

4 6 - 1 3 8 5 3 3 5

Part II Certification

Under penalties of perjury, I certify that:

1. The number shown on this form is my correct taxpayer identification number (or I am waiting for a number to be issued to me); and
2. I am not subject to backup withholding because: (a) I am exempt from backup withholding, or (b) I have not been notified by the Internal Revenue Service (IRS) that I am subject to backup withholding as a result of a failure to report all interest or dividends, or (c) the IRS has notified me that I am no longer subject to backup withholding; and
3. I am a U.S. citizen or other U.S. person (defined below); and
4. The FATCA code(s) entered on this form (if any) indicating that I am exempt from FATCA reporting is correct.

Certification instructions. You must cross out item 2 above if you have been notified by the IRS that you are currently subject to backup withholding because you have failed to report all interest and dividends on your tax return. For real estate transactions, item 2 does not apply. For mortgage interest paid, acquisition or abandonment of secured property, cancellation of debt, contributions to an individual retirement arrangement (IRA), and generally, payments other than interest and dividends, you are not required to sign the certification, but you must provide your correct TIN. See the instructions for Part II, later.

Sign Here **Signature of U.S. person ▶** **Date ▶**

General Instructions

Section references are to the Internal Revenue Code unless otherwise noted.

Future developments. For the latest information about developments related to Form W-9 and its instructions, such as legislation enacted after they were published, go to *www.irs.gov/FormW9.*

Purpose of Form

An individual or entity (Form W-9 requester) who is required to file an information return with the IRS must obtain your correct taxpayer identification number (TIN) which may be your social security number (SSN), individual taxpayer identification number (ITIN), adoption taxpayer identification number (ATIN), or employer identification number (EIN), to report on an information return the amount paid to you, or other amount reportable on an information return. Examples of information returns include, but are not limited to, the following.

- Form 1099-INT (interest earned or paid)
- Form 1099-DIV (dividends, including those from stocks or mutual funds)
- Form 1099-MISC (various types of income, prizes, awards, or gross proceeds)
- Form 1099-B (stock or mutual fund sales and certain other transactions by brokers)
- Form 1099-S (proceeds from real estate transactions)
- Form 1099-K (merchant card and third party network transactions)
- Form 1098 (home mortgage interest), 1098-E (student loan interest), 1098-T (tuition)
- Form 1099-C (canceled debt)
- Form 1099-A (acquisition or abandonment of secured property)

Use Form W-9 only if you are a U.S. person (including a resident alien), to provide your correct TIN.

If you do not return Form W-9 to the requester with a TIN, you might be subject to backup withholding. See What is backup withholding, *later.*

220

FY2021 EMPG Amendment

STATE OF MICHIGAN
DEPARTMENT OF STATE POLICE
LANSING

GRETCHEN WHITMER
GOVERNOR

COL. JOSEPH M. GASPER
DIRECTOR

August 24, 2023

Dear Local Emergency Management Coordinator:

Please accept this letter as an official amendment to the Fiscal Year (FY) 2021 Emergency Management Performance Grants American Rescue Plan Act (EMPG ARPA), grant agreement package for County of Leelanau, amendment number one. This amendment increases the total allocation to include partial reimbursement of the local emergency manager's salary and fringe benefits under the FY 2023 Emergency Management Performance Grant (EMPG) Work Agreement. All terms and conditions included in the original EMPG ARPA grant agreement package still apply.

The following language details the changes to the Federal Award Identification Cover Page, Grant Agreement, and FY 2021 EMPG ARPA Supplemental Match Certification:

Federal Award Identification Sheet

- Subaward Performance Period: Added dates, FROM: 10/1/2022, TO: 9/30/2023.
- Federal Funds Obligated by this Action: Replace, "$9,513", with, "FY 21 $9,513, FY 23 $5,800".
- Total Federal Funds Obligated to Subrecipient: Replace, "$9,513", with, "FY 21 $9,513, FY 23 $19,830".
- Total Amount of Federal Award: Replace, "$9,513", with, "FY 21 $9,513, FY 23 $15,313".
- Details: Changed to, "The 2021 EMPG ARPA allocation is 17.13% of the Subrecipient's emergency program manager's salary and fringe benefits which covers FY 21 EMPG work activities. An additional allocation of 8.77854% is awarded to cover FY 23 EMPG work activities. A cost-match is required under this program. The Federal share used towards the EMPG budget shall not exceed 50% of the total budget."
- Changed DUNS Number to UEI

Grant Agreement

- Header: Change the period of performance date to read "October 1, 2020, to September 30, 2021, and October 1, 2022, to September 30, 2023".
- Section III, Subsection A (page 2): Change "The County of Leelanauis awarded $9,513 or 17.13% of the Subrecipients local emergency manager's salary and fringe benefits under the **FY 2021 EMPG**" to "The County of Leelanauis awarded $9,513 or 17.13% of the Subrecipients local emergency manager's salary and fringe benefits under the **FY 2021 EMPG** and $5,800or 8.77854% of the Subrecipients local emergency manager's salary and fringe benefits under the **FY 2023 EMPG".**

- Section III, Subsection B (page 2): Change the period of performance date to read "October 1, 2020, to September 30, 2021, and October 1, 2022, to September 30, 2023".

- Changed "…the FY 2021 EMPG Work Agreement…" to "…the FY 2021 and FY 2023 EMPG Work Agreement..." to all references to the FY 2021 EMPG Work Agreement which can be found in the following sections of the grant agreement:
    - Section IV, Subsection E (page 3).
    - Section VI, Subsection A (page 8).
    - Section VI, Subsection C (page 8).

- Section XI (page 10): Change the period of performance date to read "October 1, 2020, to September 30, 2021, and October 1, 2022, to September 30, 2023".

Supplemental Match Certification

- Added the following paragraphs:

The initial allocation under the standard EMPG 23 grant program is 21.23394% of the total local emergency management coordinator payroll costs submitted to Michigan State Police, Emergency Management and Homeland Security Division. With this one-time, additional funding, each EMPG funded local emergency management program will receive supplemental funding to bring the 2023 percentage to 30.01247%. This ARPA supplemental award under EMPG 21 has the same requirements as the standard EMPG program with a 50% cost match requirement (cash or in-kind) as authorized by the *Robert T. Stafford Disaster Relief and Emergency Assistance Act* (Public Law 93-288), as amended, 42 USC 5121-5207. Specifically, Title VI, sections 611(j) and 614. Unless otherwise authorized by law, federal funds cannot be matched with other federal funds.

Acceptance of funds certifies local EMPG funded emergency management coordinators salary and fringe costs are local general funds, are not from federal funds, and have not been used as a match for any other federal grant program.

- Added Funding Table for FY 23.

County of Leelanau

Original Funding Allocation at 21.23394%	$14,030
Supplemental ARPA Awarded Allocation at 8.77854**%**	$5,800
Total Awarded Funds for FY 23 EMPG at 30.01247%	$19,830

Please keep a copy of this letter with your FY 2021 EMPG ARPA and FY 2023 EMPG grant agreements along with the enclosed Federal Award Identifier Coversheet, which has been modified to reflect the changes noted above.

If you have any questions regarding this correspondence, or the FY 2023 Emergency Management Performance Grant, please contact me at RichmondK@michigan.gov or 517-204-0211.

Sincerely,

Capt. Kevin Sweeney, Commander
Emergency Management
and Homeland Security Division

Michigan State Police Emergency Management and Homeland Security Division	Grant Agreement

FEDERAL AWARD IDENTIFICATION

SUBRECIPIENT NAME	GRANT NAME	CFDA NUMBER
County of Leelanau	Emergency Management Performance Grants American Rescue Plan Act	97.042
SUBRECIPIENT IRS/VENDOR NUMBER	**FEDERAL AWARD IDENTIFICATION NUMBER (FAIN)**	**FEDERAL AWARD DATE**
46-1385335	EMC-2021-EP-00006	9/02/2021
SUBRECIPIENT UEI	**SUBAWARD PERFORMANCE PERIOD** FROM	TO
NGV7GJXHMUZ8	10/1/2020 10/1/2022	9/30/2021 9/30/2023
RESEARCH & DEVELOPMENT	**Funding**	**Total**
N/A	Federal Funds Obligated by this Action	FY 21:$9,513 FY 23: $5,800
INDIRECT COST RATE	Total Federal Funds Obligated to Subrecipient	FY 21:$9,513 FY 23: $19,830
None on file	Total Amount of Federal Award Committed	FY 21: $9,513 FY 23: $15,313

FEDERAL AWARD PROJECT DESCRIPTION

2021 Emergency Management Performance Grants American Rescue Plan Act

DETAILS

The 2021 EMPG ARPA allocation is 17.13% of the Subrecipient's emergency program manager's salary and fringe benefits which covers FY 21 EMPG work activities. An additional allocation of 8.77854% is awarded to cover FY 23 EMPG work activities. A cost-match is required under this program. The Federal share used towards the EMPG budget shall not exceed 50% of the total budget.

FEDERAL AWARDING AGENCY	PASS-THROUGH ENTITY (RECIPIENT) NAME
Federal Emergency Management Agency - GPD 400 C Street, SW, 3rd floor Washington, D.C. 20472-3645	Michigan State Police Emergency Management and Homeland Security Division P.O. Box 30634 Lansing, MI 48909

EXECUTIVE DOCUMENT SUMMARY

Department: Equalization	**Submittal Dates**
Contact Person: Andrew Giguere	☑ Select Meeting Type: Executive Board
Telephone Number: 231-256-8152	Date of Meeting: 11/14/2023
Financial/Source Selection Method	Vendor: State of Michigan
☐ Select One: Select One	Address/ Phone:
☑ Other: n/a	
☐ *Account No.:*	
☐ *CIP Project?*	**Description:** Amendment
☐ *If Grant, Match Account No.:*	

Budgeted Amount: $ 0.00 Contracted Amount: $ 0.00

Document Description

☐ **Request to Waive Board Policy on Bid Requirements** ☑ **Department Head/Elected Official Authorization**

MCL (Michigan Compiled Laws) Section 211.34d states the following:

"At the annual session in October, the county board of commissioners shall not authorize the levy of a tax unless the governing body of the taxing jurisdiction has certified that the requested millage has been reduced, if necessary, in compliance with Section 31 of Article 9 of the state constitution of 1963."

This is known as the "Headlee" millage rollback. In addition, millage rate rollbacks may be necessary pursuant to MCL Sections 211.34 (Truth in Assessing or Truth in County Equalization), and/or 211.243 (Truth in Taxation). In counties only, rollbacks may also be necessary for the Convention Facilities Tax or Cigarette Tax; however, a county, which complies with Section 16 of the Uniform Budgeting and Accounting Act, is not required to make the calculations relating to the Convention Facilities Tax or the Cigarette Tax.

The Apportionment Report has been prepared by the Equalization Department, which functions as staff to the County Board of Commissioners. The County Prosecutor is obligated, by statute, to furnish legal advice promptly regarding the Apportionment Report. This report is now due annually on or before November 30, in order to accommodate any November elections. If there are no scheduled elections, the report can be submitted as approved in October. **For 2023, no revisions were necessary due to elections; however, Leelanau Township did reduce its emergency services millage from 3.5095 to 3.0000 due to a late approval session on October 10th.**

Suggested Recommendation:

I move to recommend that the County Board of Commissioners approve the revised County Apportionment Report (L-4402), as presented.

Department Approval: Andrew Giguere Date: 10/16/2023

REVISED 10-11-2023 (LEELANAU TOWNSHIP CHANGE IN FACILITIES MILLAGE)

(A) County Name	(B) Taxable Value	(C) County Allocated Rate / SET	(D) Est. County Allocated / SET Tax Dollars	(E) Total County Extra Voted Operating Rate	(F) Est. County EV Oper. Tax Dollars	(G) Total County Debt Rate	(H) Est. County Debt Tax Dollars	(I) Total Est. County Tax Dollars	(BB) Total RenZone Taxable Value
Leelanau	3,609,202,761.00	3.3580	12,119,702.87	0.9995	3,607,398.17	0.0000	0.00	15,727,101.04	0.00
STATE ED. TAX	3,606,369,661.00	6.0000	21,638,217.97	0.0000	0.00	0.0000	0.00	0.00	0.00

(J) Local Unit Name Townships Cities Villages Listed Alphabetically	(K) Taxable Value	(L) Total Allocated / Charter Rate	(M) Est. Local Allocated / Charter Tax Dollars	(N) Total Other Extra Voted / General Law Operating Rate	(O) Est. Local EV / GL Oper. Tax Dollars	(P) Total Debt Rate	(Q) Est. Local Debt Tax Dollars	(R) Total Est. Local Tax Dollars	(KK) Total RenZone Taxable Value
Bingham	290,021,758.00	0.2000	58,004.35	0.0000	0.00	0.0000	0.00	58,004.35	0.00
Centerville	139,546,369.00	0.5407	75,452.72	2.2500	313,979.33	0.0000	0.00	389,432.05	0.00
Cleveland	144,629,900.00	0.5491	79,416.28	2.2500	325,417.28	0.0000	0.00	404,833.56	0.00
Elmwood	419,649,672.00	0.6258	262,616.76	2.6000	1,091,089.15	0.0000	0.00	1,353,705.91	0.00
Empire	266,752,700.00	0.4248	113,316.55	4.5000	1,200,387.15	0.0000	0.00	1,313,703.70	0.00
Glen Arbor	563,577,978.00	0.4600	259,245.87	2.4000	1,352,587.15	0.3620	204,015.23	1,815,848.25	0.00
Kasson	135,611,823.00	0.6325	85,774.48	2.5000	339,029.56	0.0000	0.00	424,804.04	0.00
Leelanau	535,250,306.00	0.5051	270,354.93	4.5328	2,426,182.59	0.0000	0.00	2,696,537.52	0.00
Leland	602,899,221.00	0.3994	240,797.95	2.9815	1,797,544.03	0.3810	229,704.60	2,268,046.58	0.00
Solon	127,954,059.00	0.5632	72,063.73	2.5000	319,885.15	0.0000	0.00	391,948.88	0.00
Suttons Bay	326,769,551.00	0.5414	176,913.03	0.0000	0.00	0.0000	0.00	176,913.03	0.00
Traverse City	56,539,424.00	11.7688	665,401.17	2.3200	131,171.46	0.0000	0.00	796,572.63	0.00
EMPIRE	70,413,151.00	6.3063	444,046.45	0.0000	0.00	0.3600	25,348.73	469,395.18	0.00
NORTHPORT	64,869,973.00	8.5000	551,394.77	0.0000	0.00	0.0000	0.00	551,394.77	0.00
SUTTONS BAY	97,369,626.00	8.9858	874,943.99	0.0000	0.00	0.0000	0.00	874,943.99	0.00

(A) Authority (Dist. Libraries, DDAs, Transit, Metro, Fire, etc.)	(B) Taxable Value	(C) Total Operating Rate	(D) Est. Authority Oper. Tax Dollars	(E) Total Debt Rate	(F) Est. Authority Debt Tax Dollars	(G) Est. Total Authority Tax Dollars	(BB) Total RenZone Taxable Value
FIRE - SB BINGHAM AUTH.	616,791,309.00	3.2500	2,004,571.75	0.0000	0.00	2,004,571.75	0.00
LIBRARY - GLEN LAKE	965,942,501.00	0.2962	286,112.17	0.0000	0.00	286,112.17	0.00
LIBRARY - SUTTONS BAY BINGHAM	616,791,309.00	0.4874	300,624.08	0.0000	0.00	300,624.08	0.00
LIBRARY - TRAVERSE AREA LEELANAU CO.	56,539,424.00	0.9044	51,134.26	0.0000	0.00	51,134.26	0.00
RECREATION - TC GARFIELD LEELANAU CO.	56,539,424.00	0.1500	8,480.91	0.2300	13,004.07	21,484.98	0.00
TRANSIT - BAY AREA (BATA) LEELANAU CO.	3,609,202,761.00	0.4788	1,728,086.28	0.0000	0.00	1,728,086.28	0.00

(A) Local K12 School District Name	(B) Total Taxable Value	(C) Total NonHomestead Taxable Value	(D) Total Commercial Personal Taxable Value	(E) HH / Supplemental Rate	(F) Est. HH / Supplemental Tax Dollars	(G) Non Homestead Operating Rate	(H) Est. NH Operating Tax Dollars	(I) Total Debt / Sinking Fund / Bldg Site Rate	(J) Est. Debt / Sinking Fund / Bldg Site Tax Dollars	(K) Total Recreational Rate	(L) Est. Recreational Tax Dollars	(M) Total Est. Local K12 School Tax Dollars	(BB) Total RenZone Taxable Value	(GG) Non Homestead Comm.Pers. Operating Rate
GLEN LAKE COMMUNITY SCH DIST	1,139,903,296.00	687,548,614.00	6,526,300.00	0.0000	0.00	15.0696	10,381,115.72	0.3300	376,168.09	0.0000	0.00	10,757,283.81	0.00	3.0696
LELAND PUBLIC SCHOOL DIST	781,084,249.00	467,230,951.00	1,573,730.00	0.0000	0.00	10.9013	5,093,424.77	3.0000	2,343,252.75	0.0000	0.00	7,436,677.52	0.00	0.0000
NORTHPORT PUBLIC SCHOOL DIST	532,718,440.00	331,090,748.00	2,047,700.00	0.0000	0.00	13.3880	4,435,485.14	0.0000	0.00	0.0000	0.00	4,435,485.14	0.00	1.3880
SUTTONS BAY PUBLIC SCH DIST	646,022,805.00	247,895,060.00	3,253,460.00	0.0000	0.00	18.0000	4,481,631.84	1.9094	1,233,515.94	0.0000	0.00	5,715,147.78	0.00	6.0000
TRAVERSE CITY SCHOOL DIST.	509,473,971.00	163,103,591.00	6,947,800.00	0.0000	0.00	18.0000	2,977,551.44	3.1000	1,579,369.31	0.0000	0.00	4,556,920.75	0.00	6.0000

(A) Community College Name	(B) Taxable Value	(C) Total Operating Rate	(D) Est. Community College Oper. Tax Dollars	(E) Total Debt Rate	(F) Est. Community College Debt Tax Dollars	(G) Est. Total Community College Tax Dollars	(BB) Total RenZone Taxable Value

(H) Intermediate School District Name	(I) Taxable Value	(J) ISD Allocated Rate	(K) Est. ISD Allocated Tax Dollars	(L) ISD Total EV Operating Rate	(M) Est. ISD EV Operating (Spec Ed/Voc/Enh) Tax Dollars	(N) ISD Total Debt Rate	(O) Est. ISD Debt Tax Dollars	(P) Est. Total ISD Tax Dollars	(II) Total RenZone Taxable Value
TRAVERSE BAY	3,609,202,761.00	0.1881	678,891.04	2.6990	9,741,238.25	0.0000	0.00	10,420,129.29	0.00

Township / City	Village	School Code	Local School District	Total Homestead Property Tax Rate	Total NonHomestead Property Tax Rate	Total Homestead Property Tax Rate w/Special Assmnt	Total NonHomestead Property Tax Rate w/Special Assmnt
Bingham		45050	SUTTONS BAY PUBLIC SCH DIST	19.5702	37.5702	19.5702	37.5702
Centerville		45010	GLEN LAKE COMMUNITY SCH DIST	16.8441	31.9137	16.8441	31.9137
Centerville		45020	LELAND PUBLIC SCHOOL DIST	19.5141	30.4154	19.5141	30.4154
Cleveland		45010	GLEN LAKE COMMUNITY SCH DIST	16.8525	31.9221	16.8525	31.9221
Cleveland		45020	LELAND PUBLIC SCHOOL DIST	19.5225	30.4238	19.5225	30.4238
Elmwood		28010	TRAVERSE CITY SCHOOL DIST.	20.0492	38.0492	20.0492	38.0492
Elmwood		45050	SUTTONS BAY PUBLIC SCH DIST	18.8586	36.8586	18.8586	36.8586
Empire		45010	GLEN LAKE COMMUNITY SCH DIST	19.2744	34.3440	19.2744	34.3440
Empire	EMPIRE	45010	GLEN LAKE COMMUNITY SCH DIST	25.9407	41.0103	25.9407	41.0103
Glen Arbor		45010	GLEN LAKE COMMUNITY SCH DIST	17.5716	32.6412	19.9716	35.0412
Kasson		45010	GLEN LAKE COMMUNITY SCH DIST	17.4821	32.5517	17.4821	32.5517
Leelanau		45020	LELAND PUBLIC SCHOOL DIST	21.7613	32.6626	21.7613	32.6626
Leelanau		45040	NORTHPORT PUBLIC SCHOOL DIST	18.7613	32.1493	18.7613	32.1493
Leelanau	NORTHPORT	45040	NORTHPORT PUBLIC SCHOOL DIST	27.2613	40.6493	27.2613	40.6493
Leelanau		45050	SUTTONS BAY PUBLIC SCH DIST	20.6707	38.6707	20.6707	38.6707
Leland		45020	LELAND PUBLIC SCHOOL DIST	20.4853	31.3866	20.4853	31.3866
Leland		45050	SUTTONS BAY PUBLIC SCH DIST	19.3947	37.3947	19.3947	37.3947
Solon		28010	TRAVERSE CITY SCHOOL DIST.	19.8866	37.8866	19.8866	37.8866
Solon		45010	GLEN LAKE COMMUNITY SCH DIST	17.1166	32.1862	17.1166	32.1862
Suttons Bay		45020	LELAND PUBLIC SCHOOL DIST	21.0022	31.9035	21.0022	31.9035
Suttons Bay		45040	NORTHPORT PUBLIC SCHOOL DIST	18.0022	31.3902	18.0022	31.3902
Suttons Bay		45050	SUTTONS BAY PUBLIC SCH DIST	19.9116	37.9116	19.9116	37.9116
Suttons Bay	SUTTONS BAY	45050	SUTTONS BAY PUBLIC SCH DIST	28.8974	46.8974	28.8974	46.8974
Traverse City		28010	TRAVERSE CITY SCHOOL DIST.	32.1966	50.1966	32.1966	50.1966

Local Municipality (Twp/City/Vlg)	ALL Purpose(s) of Qualifying Special Assessment Millage Rates for the Local Municipality Listed		Total of All Special Assessment Rates Levied UNITWIDE
Glen Arbor		Fire – 119	2.4000

EXECUTIVE DOCUMENT SUMMARY

Department: Planning/Community Development Contact Person: Trudy Galla Telephone Number: 231-256-9812	**Submittal Dates** ☑ Select Meeting Type: Executive Board Date of Meeting: 11/14/2023
Financial/Source Selection Method ☐ Select One: Grant ☑ Other: Brownfield Plan Adoption ☐ *Account No.:* ☐ *CIP Project?* ☐ *If Grant, Match Account No.:*	Vendor: Address/ Phone: **Description:** Select One

Budgeted Amount: $ 0.00 Contracted Amount: $ 0.00

Document Description

☐ **Request to Waive Board Policy on Bid Requirements** ☐ **Department Head/Elected Official Authorization**

Attached is a Draft Resolution for the Bluebird Brownfield Plan, Leland, MI, owned by Skip and Lyn Telgard. The Brownfield Plan was previously emailed to you, and is also available in the Planning & Community Development office. The Leelanau County Brownfield Redevelopment passed a motion 6-0 on September 19 to approve the plan and pass it along to Leland Township.

On October 9th, Director Galla and consultant Therese Searles, Fishbeck, along with the Telgards, made a presentation to the Leland Township Board and answered questions. Following the presentation, the Leland Township Board passed a resolution in support of the Brownfield Plan on a vote of 4-1.

A Public Hearing will be held on Tuesday, November 21 at 6 pm at the Leelanau County Government Center. This Resolution should be placed on the agenda for the Regular meeting of the Board of Commissioners on November 21, at 7 pm, for action by the Board.

Suggested Recommendation:

Motion to recommend that the Board of Commissioners place the Resolution for the Bluebird Brownfield Plan on the Regular meeting agenda of Tuesday, November 21 for action by the Board.

Department Approval: Trudy J Galla Date: 11/08/2023

LEELANAU COUNTY
LEELANAU COUNTY, MICHIGAN

RESOLUTION APPROVING A BROWNFIELD PLAN BY THE LEELANAU COUNTY BOARD OF COMMISSIONERS PURSUANT TO AND IN ACCORDANCE WITH THE PROVISIONS OF ACT 381 OF THE PUBLIC ACTS OF THE STATE OF MICHIGAN OF 1996, AS AMENDED

RESOLUTION NO. _____

November 21, 2023

At a regular meeting of the Leelanau County Board of Commissioners held in the Leelanau County Government Center located at 8527 E. Government Center Dr., Suttons Bay, Michigan, on the 21st day of November, 2023, at 7:00 p.m.

PRESENT:

ABSENT:

MOTION BY:

SUPPORTED BY:

WHEREAS, the Leelanau County Board of Commissioners, pursuant to and in accordance with the provisions of the Brownfield Redevelopment Financing Act, being Act 381 of the Public Acts of the State of Michigan of 1996, as amended (the "Act"), have formally resolved to participate in the Brownfield Redevelopment Authority (BRA) of Leelanau County (the "Authority") and have designated that all related activities shall proceed through the BRA; and

WHEREAS, the Authority, pursuant to and in accordance with Section 13 of the Act, has reviewed and recommended for approval by the Board of Commissioners, the Brownfield Plan (the "Plan") attached hereto, to be carried out within Leland Township, relating to the redevelopment of the commercial property located at 102 E. River Street and the adjoining commercial property located at 101 S. Main Street, Leland Township, Michigan, (the "Site"), as shown in Figures 1 & 2 of the Brownfield Plan and more particularly described in the legal description of the property contained within the attached Plan; and

WHEREAS, the Leelanau County Board of Commissioners has reviewed the Plan, and was provided a reasonable opportunity to express their views and recommendations regarding the Plan and in accordance with Section 14(5) of the Act; and

WHEREAS, Leelanau County has noticed and held a public hearing in accordance with Section 14 (1,2,3,4 and 5) of the Act; and

WHEREAS, the Leelanau County Board of Commissioners have made the following determinations and findings:

1. The Plan constitutes a public purpose under the Act;
2. The Plan meets all of the requirements for a Brownfield plan set forth in Section 13 of the Act;
3. The proposed method of financing the costs of the eligible activities, as described in the Plan, was feasible and the BRA has the ability to arrange the financing;
4. The costs of the eligible activities proposed in the Plan are reasonable and necessary to carry out the purposes of the Act; and
5. The amount of captured taxable value estimated to result from the adoption of the Plan is reasonable; and

WHEREAS, as a result of the review of the Plan the Leelanau County Board of Commissioners concurs with the approval of the individual Plan.

NOW, THEREFORE BE IT RESOLVED THAT:

1. **Plan Approval**. Pursuant to the authority vested in the Leelanau County Board of Commissioners, by the Act, the Plan is hereby approved in the form attached to this Resolution.
2. **Severability**. Should any section, clause or phrase of this Resolution be declared by the courts to be invalid, the same shall not affect the validity of this Resolution as a whole nor any part thereof other than the part so declared to be invalid.
3. **Repeals**. All resolutions of parts of resolutions in conflict with any of the provisions of this Resolution are hereby repealed.

AYES:

NAYES:

ABSTAINED:

RESOLUTION DECLARED ADOPTED.

STATE OF MICHIGAN)
)§
LEELANAU COUNTY)

I, the undersigned, the fully qualified and acting Clerk of Leelanau County, State of Michigan, do hereby certify that the foregoing is a true and complete copy of a Resolution adopted by the Leelanau County Board of Commissioners at a regular meeting held on the 21st day of November, 2023, the original of which resolution is on file in my office.

IN WITNESS WHEREOF, I have hereunto set my official signature this 21st day of November, 2023

_____

Ms. Michelle Crocker
County Clerk

EXECUTIVE DOCUMENT SUMMARY

Department: Planning/Community Development	**Submittal Dates**
Contact Person: Trudy Galla	☑ Select Meeting Type: Executive Board
Telephone Number: 231-256-9812	Date of Meeting: 11/14/2023
Financial/Source Selection Method	Vendor: ERG
☑ Select One: Grant	Address/ Phone:
☐ Other:	
☐ *Account No.:*	
☐ *CIP Project?*	**Description:** Service
☐ *If Grant, Match Account No.:*	

Budgeted Amount: $ 20,000.00 Contracted Amount: $ 22,000.00

Document Description

☐ **Request to Waive Board Policy on Bid Requirements** ☐ **Department Head/Elected Official Authorization**

This request is for approval of an amendment to the tire recycling grant with ERG. The maximum cost per collection is $11,000 and we will once again hold 2 tire collections in 2024. The budget amount is $20,000. We also collect a small fee per each tire collected, and request 2% funds to help offset the budget. The maximum that would be allowed for the 2 collections is $22,000. ERG handles the collections including all labor and making sure the tires are transported to a processing facility.

Leelanau County has also applied again for a tire recycling grant with the state. If approved, this grant would be brought back to the County Board for acceptance and would also help offset the costs of the collections.

The amendment has been drafted by Corporate Counsel. This contract amendment was recommended for approved by the Solid Waste Council at its meeting November 7, 2023.

Suggested Recommendation:

Motion to recommend that the Board of Commissioners approve the Tire Recycling Amendment with ERG for 2024, as submitted.

Department Approval: Trudy J Galla Date: 11/06/2023

AMENDMENT NO. 3

THIS AMENDMENT NO. 3, made and entered into by and between the **COUNTY OF LEELANAU**, a municipal corporation and political subdivision of the State of Michigan (hereinafter referred to as the "County") and **ERG ENVIRONMENTAL SERVICES**, whose business address is 1340 Merriman, Suite 200, Livonia, Michigan 48140 (hereinafter referred to as the "Contractor"), amends the Agreement (hereinafter referred to as the "Agreement") entered into on May 18, 2019, as amended by Amendments No. 1 and 2.

1. Section I. Services to be Performed by the Contractor, pages 1-2, of the above-stated Agreement shall be amended to read as follows:

"**I. SERVICES TO BE PERFORMED BY THE CONTRACTOR.** The Contractor shall collect, load, transport, process, and recycle scrap tires collected and stockpiled by County residents consistent with the specifications set forth in the Scope of Work, pages 10 and 11of the County's Request for Proposals (RFP-LCAO-2019-004) (hereinafter referred to as a "RFP"). A copy of said RFP is attached to this Agreement labeled Attachment A. The attached Attachment A is incorporated by reference into this Agreement and is made a part thereof.

The Contractor shall provide all equipment, materials, machinery, vehicles, and labor necessary to process and transport the scrap tires generated from the scrap tire collections to be held on Friday, June 21, 2024 at Glen Lake Community Schools located at 3375 W. Burdickville Road, Maple City, Michigan 49664, and Friday, October 11, 2024 in Peshawbestown, at a recycling center near the casino to be agreed upon by the parties hereto, (hereinafter referred to as the "Collection Site") from 5:00 p.m. to 7:00 p.m. (EST). The County may not reschedule the Program without the prior written consent of the Contractor. The Contractor's consent will not be unreasonably withheld.

The primary interface between the Contractor and the County shall be through the Leelanau County Planning and Community Development Department. The Leelanau County Planning and Community Development Department shall be responsible for the coordination of the Contractor's work at the Collection Site. The Contractor guarantees its performance of the Services required under this Agreement and shall submit to the personal inspection of such Services by the Department and by such other representative or agent as may be designated by the County."

2. Section XVIII. Agreement Period, page 8, of the above-stated Agreement shall be amended to read as follows:

"**XVIII. AGREEMENT PERIOD.** This Agreement shall become effective on the date in which it has been fully signed by the authorized representatives of both parties (hereinafter referred to as the "Effective Date"). All Services for the Program including all items on the final punch list shall be completed by no later than thirty (30) calendar days following the Program (hereinafter referred to as the "Completion Date").

It is also understood and agreed by the parties hereto that all obligations of the Contractor set forth in this Agreement which extend to beyond the Completion Date of the work shall

survive said completion and remain in full force and effect for the time set for the performance of said obligations.

Notwithstanding any other provision in this Agreement to the contrary, the County may terminate this Agreement, with or without cause, upon five (5) calendar days' prior written notice to the Contractor. In the event this Agreement is prematurely terminated without cause (i.e., for reasons other than the Contractor's breach of the terms of this Agreement) as set forth herein, the Contractor shall be compensated for services completed as of the effective date of termination in accordance with Section II of this Agreement."

3. Section XXII. Extension of Agreement Period, page 9, of the above-stated Agreement shall be added to read as follows:

"**XXII. EXTENSION OF AGREEMENT PERIOD.** This Agreement may be extended for up to one (1) additional one (1) year term by mutual written agreement by the parties. This option shall be exercised by written notice to the County, given not less than sixty (60) calendar days prior to the expiration of the original term, stating the desire to have the Agreement's terms extended. If the Agreement is extended, all terms and conditions set forth in this Agreement shall remain in full force and effect."

4. All other terms and conditions contained in the above-stated Agreement and exhibits thereto shall remain in full force and effect except as modified herein. This Amendment No. 2 shall become effective on the date in which it is fully signed by the authorized representatives of both parties.

5. The persons signing this Amendment No. 3 on behalf of the parties to the above-stated Agreement, as amended by Amendment No. 1 and 2, certify by their signatures that they are duly authorized to sign this Amendment No. 3 to the Agreement, as amended by Amendment No. 1 and 2, on behalf of the parties and that this Amendment No. 3 has been authorized by the parties.

THE AUTHORIZED REPRESENTATIVES OF THE PARTIES HERETO HAVE FULLY EXECUTED THIS AMENDMENT NO. 3 TO THE AGREEMENT FOR SCRAP TIRE RECYCLING SERVICES.

COUNTY OF LEELANAU

By:_____
Ty Wessell, Chairman
County Board of Commissioners

Date: _____

ERG ENVIRONMENTAL SERVICES

By: _____
(Signature)

Name: _____
(Print or Type)

Title: _____
(Print or Type)

Date: _____

APPROVED AS TO FORM FOR COUNTY OF LEELANAU
COHL, STOKER & TOSKEY, P.C.
By: **DONALD KULHANEK**
On: October 2, 2023

N:\Client\Leelanau\Agreements\ERG Environmental Svcs\Amd No. 3 to Clean Up Service Agreement with ERG Services.docx

EXECUTIVE DOCUMENT SUMMARY

Department: Planning/Community Development	**Submittal Dates**
Contact Person: Trudy Galla	☑ Select Meeting Type: Executive Board
Telephone Number: 231-256-9812	Date of Meeting: 11/14/2023
Financial/Source Selection Method	Vendor: Bay Area Recycling for Community
☐ Select One: Select One	Address/ Phone:
☐ Other:	
☐ *Account No.:*	
☐ *CIP Project?*	**Description:** Service
☐ *If Grant, Match Account No.:*	

Budgeted Amount: $ 8,000.00 Contracted Amount: $ 5,096.00

Document Description

☐ **Request to Waive Board Policy on Bid Requirements** ☐ **Department Head/Elected Official Authorization**

This request is for approval of a contract with Bay Area Recycling for Community (BARC) for two mattress recycling events in 2024. The cost is $2,548 per collection for 100 mattresses (plus an additional $15/mattress in excess of the 100 collected). The budget for mattress collections is $8,000. The contract allows for up to 2 more collections, if there is interest and the budget allows. The county has also submitted a 2% allocation request to the Grand Traverse Band for funds to help support mattress recycling.

Corporate Counsel has prepared the contract and BARC has signed it.

Suggested Recommendation:

Motion to recommend that the Board of Commissioners approve the 2024 Mattress recycling contact with Bay Area Recycling for Community (BARC), as submitted.

Department Approval: Trudy J. Galla Date: 11/06/2023

AGREEMENT

THIS AGREEMENT is made and entered into this 17th day of OCTOBER, 2023, by and between the **COUNTY OF LEELANAU**, a municipal corporation and political subdivision of the State of Michigan ("County") and **BAY AREA RECYCLING FOR COMMUNITY**, whose business address is 466 US 31 South, Traverse City, Michigan 49685 ("Contractor").

RECITALS:

WHEREAS, the County wishes to operate a mattress recycling program ("Program"); and

WHEREAS, the purpose of the Program is to collect dry twin, double, queen, king, foam, crib, and futon mattresses; box springs; and pillow tops that must be loaded, transported, processed, and disposed of or recycled using proper techniques ("Services"); and

WHEREAS, the Contractor is experienced in and ready to furnish all labor, materials, tools, equipment, permit fees, and services necessary to perform and complete the work the County requires for the Program ("Proposal"); and

WHEREAS, the Contractor meets all the licensing and other certifications and authorizations required by federal and state laws and regulations; and

WHEREAS, the County accepts the Contractor subject to the terms and conditions of this Agreement.

NOW, THEREFORE, for and in consideration of the mutual covenants hereinafter contained, **IT IS HEREBY AGREED** as follows:

I. SERVICES TO BE PERFORMED BY THE CONTRACTOR. The Contractor shall collect, load, transport, process, and recycle dry twin, double, queen, king, foam, crib, and futon mattresses; box springs; and pillow tops collected and stockpiled by County residents.

As part of the Services, the Contractor shall provide all labor, materials, tools, equipment, permit fees, and services necessary to process and transport the collected items generated from the 1 day collection to be held on Friday, June 21, 2024 from 4:00 p.m. until 7:00 p.m. EDT at Glen Lake School, 3375 W. Burdickville Rd., Maple City, MI 49664 and on October 11, 2024 from 4:00 p.m. until 7:00 p.m. EST in Peshawbestown, at a recycling center near the casino to be agreed upon by the parties hereto ("Collection Site"). This includes providing 1 truck and 2 employees to load and stack the collected items. The County may not reschedule the collection without the prior written consent of the Contractor. The Contractor's consent will not be unreasonably withheld.

It is expressly understood and agreed by the parties hereto that the County shall have the option to host up to 2 additional collections per year if, in the County's discretion, there is a sufficient appropriation of funds and enough interest from County residents. The County's option(s) to continue the Contractor's Services, as set forth herein, may be exercised only by delivery to the Contractor of written notification of the exercise of the option(s). Any extension of Services, as set forth herein, shall be subject to all the terms and conditions of this Agreement. Any additional Collection Sites shall be agreed to in writing by the parties.

The primary interface between the Contractor and the County shall be through the Leelanau County Planning and Community Development Department ("Department"). The Department shall be responsible for the coordination of the Contractor's work at the Collection Site. The Contractor guarantees its performance of the Services required under this Agreement, and shall submit to the personal inspection of such Services by the Department and by such other representative or agent as may be designated by the County.

II. COMPENSATION. It is expressly understood and agreed that the total compensation to be paid to the Contractor for the collection of 100 mattresses; administrative costs; transportation, including labor and mileage; and recycling during the Program shall not exceed the sum of $2,548.00. (The parties further understand and agree that the County shall pay, and the Contractor shall receive, $15.00 per mattress collected in excess of the 100 mattresses initially contemplated. After the Program or any extended collections, the Contractor shall submit an invoice to the County. Invoices, at a minimum, shall list the categories of items collected, the number of units of each item collected, and the total sum due for the collection being billed. The County shall process and pay the Contractor the sum correctly billed to it in accordance with the County's procedure for payment of Accounts Payable within 30 calendar days after the County has received all of the following:

A. The invoice stating the Services have been completed on or before the date of invoicing and total sum due.

B. Verification of said completion from the Inspector(s) (defined below) designated by the County pursuant to Section III of this Agreement.

C. Before payment of the bill, the County may require that it be provided with proof that the Contractor has paid its employees and any suppliers and/or subcontractors providing materials or performing services under this Agreement.

The work being billed shall be to the satisfaction of the County's Inspector(s).

III. EXAMINATION OF EXISTING FACILITY, QUALITY OF WORKMANSHIP, AND INSPECTION OF WORK. The Contractor shall be responsible for examining the Collection Site's existing conditions in order to gain full information under which the work is to be carried out. Failure to do so shall in no way relieve the Contractor from the necessity to complete the work without additional cost to the County.

All work done by the Contractor under this Agreement shall be performed in a skillful and workmanlike manner, according to applicable local and State of Michigan codes. The Contractor shall only employ persons who are skilled in the work to be performed. The County may in its sole discretion require the Contractor to remove any worker that the County deems incompetent or careless. The County shall designate the Department and such other individual or individuals it may desire to act as its representative(s) in the inspection of work done by the Contractor under this Agreement ("Inspector(s)") to ensure that such work is in accordance with the Program's requirements.

The inspections to be conducted by the Inspector(s) shall include, but not be limited to, inspection of the work completed by the Contractor upon notification from the Contractor of

having substantially completed the Services as set forth in Section II of this Agreement. In the event the Inspector(s) discovers that any of the work is not in compliance with the requirements of this Agreement, and applicable laws, ordinances, rules, regulations and codes, or is otherwise defective, he/she/they shall notify the County and the Contractor in writing. The County may, without any additional cost to the County other than that agreed to in Section II, require the Contractor to correct such defects, deviations from, or non-compliance with the requirements of this Agreement, or the requirements of applicable laws, ordinances, rules, regulations and codes prior to compensating the Contractor under this Agreement.

Any inspection(s) by the County shall not relieve the Contractor from any responsibility regarding defects or other failures to meet the requirements of this Agreement.

IV. WARRANTIES. The Contractor warrants that it meets all Federal, State and local licensing; certifications; and authorization requirements to perform all the work required by the Program.

V. CLEANING UP. The Contractor and its subcontractors shall at all times keep the Collection Site and surrounding area free from accumulation of waste material or rubbish caused by its operations. Complete clean-up and removal of all debris resulting from the Contractor's work is required. The Contractor shall be responsible for paying for and hauling away any debris and waste resulting from the Services. Within 1 hour of the end of the Program, the Contractor shall remove all remaining waste material and rubbish from and about the Collection Site, as well as its tools, equipment, and machinery. If the Contractor fails to clean up during and at the completion of the Services, the County may do so and the cost thereof shall be charged to the Contractor, deducted from the Contractor's invoice.

VI. PROTECTION OF PERSONS AND PROPERTY. In addition to its obligations under Section XI of this Agreement, the Contractor shall:

A. Be responsible for initiating, maintaining, and supervising all safety precautions and programs in connection with the Services.

B. Take all reasonable precautions for safety of, and provide all reasonable protection to prevent damage, injury, or loss to:

   1. All its and the County's employees at the Collection Site and all other persons who may be affected thereby.

   2. Other property at the Collection Site or adjacent thereto.

C. Give all notices and comply with all applicable laws, ordinances, rules, and regulations and lawful orders of any public authority bearing on the safety of persons or property or their protection from damage, injury, or loss.

D. Erect and maintain, as required by existing conditions and progress of the Services, all reasonable safeguards for safety and protection, including, but not limited to, posting danger signs and setting up barriers where needed.

E. Promptly repair or remedy all injury, damage, or loss to any property that is caused in whole or in part by the Contractor, any subcontractor, any sub-subcontractor or anyone directly or indirectly employed by them, or by anyone for whose acts any of them may be liable and for which the Contractor is responsible under subsection B of this Section.

VII. <u>COMPLIANCE WITH THE LAW AND OBTAINING PERMITS</u>. The Contractor and its subcontractors shall:

A. Comply with all applicable Federal, State, and local laws, ordinances, codes, rules, and regulations.

B. Secure and pay for all permits and governmental fees, licenses, and inspections necessary for the Services.

C. Comply with the Michigan Occupational Safety and Health Act, 1974 PA 154, as amended, ("OSHA") and regulations promulgated pursuant thereto. If during the progress of the Program, it is discovered that the Contractor has failed to comply with OSHA, its regulations, or other applicable Federal, State or local laws, ordinances and regulations, the Contractor and its subcontractors shall take such steps as necessary to comply, at no additional cost to the County.

D. Be held responsible for the safety of their employees and/or volunteers and any unsafe acts or conditions that may cause injury or damage to any persons or property within and around the Collection Site under this Agreement.

E. Submit a Material Safety Data Sheet to the County Administrator's Office prior to commencement of work if the Contractor or any subcontractor uses any product at the Collection Site which contains any hazardous or injurious ingredients.

Breach of this Section shall be regarded as a material breach of this Agreement, In the event the Contractor, its subcontractors and sub-subcontractors are found not to be in compliance with this subsection, the County may terminate this Agreement effective as of the date of delivery of written notification to the Contractor.

VIII. <u>APPLICABLE LAW AND VENUE</u>. This Agreement shall be subject to, governed by, and construed according to the laws of the State of Michigan. It is expressly understood and agreed that any legal or equitable action that arises out of or regarding this Agreement shall be in Michigan Courts whose jurisdiction and venue shall be established in accordance with the statutes of the State of Michigan and Michigan Court Rules. In the event any action is brought in or moved to Federal Court, the venue for such action shall be the Federal Judicial District of Michigan, Western District, Southern Division.

IX. <u>NONDISCRIMINATION</u>. The Contractor, as required by law, shall not discriminate against an employee or applicant for employment with respect to hire, tenure, terms, conditions or privileges of employment, or a matter directly or indirectly related to employment because of race, color, religion, national origin, age, sex, height, disability which is unrelated to the individual's ability to perform the duties of a particular job or position, weight, marital status or political affiliation.

The Contractor shall adhere to all applicable Federal, State and local laws, ordinances, rules and regulations prohibiting discrimination, including, but not limited to the following: (i) the Elliott-Larsen Civil Rights Act, 1976 PA 453, as amended; (ii) the Persons with Disabilities Civil Rights Act, 1976 PA 220, as amended; (iii) Section 504 of the Federal Rehabilitation Act of 1973, P.L. 93-112, 87 Stat 355, as amended, and regulations adopted thereunder; and (iv) the Americans with Disabilities Act of 1990, P.L. 101-336, 104 Stat 327 (42 USC §12101 *et seq.*), as amended, and regulations promulgated thereunder.

Breach of this Section shall be regarded as a material breach of this Agreement.

X. INDEPENDENT CONTRACTOR.

A. It is expressly understood and agreed that the Contractor, its subcontractors and sub-subcontractors, are independent contractors. The employees, servants, agents, and assigns of the Contractor, its subcontractors or sub-subcontractors shall in no way be deemed to be and shall not hold themselves out as employees, servants, or agents of the County and shall not be entitled to any fringe benefits of the County. The Contractor, its subcontractors and sub-subcontractors shall be responsible for paying all salaries, wages, and other compensation which may be due their employees or agents for performing work under this Agreement and for the withholding and payment of all applicable taxes.

B. The direction and supervision of the working forces rests exclusively with the Contractor. The County shall not issue any instructions to, or otherwise interfere with the same.

XI. INDEMNIFICATION AND HOLD HARMLESS. The Contractor shall, at its own expense, protect, defend, indemnify, and hold harmless the County, and its elected and appointed officers, employees, and agents from all claims, damages, costs, law suits, and expenses that they may incur as a result of any acts, omissions, or negligence of the Contractor or any of its officers, employees, agents, or subcontractors which may arise out of this Agreement. The Contractor's indemnification responsibilities under this Section shall include the sum of damages, costs, and expenses which are in excess of the sum paid out on behalf of or reimbursed to the County, its officers, employees, and agents by the insurance coverage obtained and/or maintained by the Contractor pursuant to the requirements of this Agreement.

XII. LIABILITY INSURANCE. The Contractor at all times during the term of this Agreement shall maintain insurance that meets the requirements of Leelanau County's Board of Commissioners Policy on "Insurance Requirements." A copy of said Board Policy is attached to this Agreement labeled Attachment A. The attached Attachment A is incorporated by reference into this Agreement and is made a part thereof. The Contractor shall also include an endorsement stating Glen Lake Community Schools and all of its elected and appointed officials, employees and volunteers, boards, commissions, and or/authorities, including employees and volunteers thereof, shall be additional insureds for purposes of this Agreement.

XIII. WAIVERS. No failure or delay on the part of either the County or the Contractor in exercising any right, power, or privilege hereunder shall operate as a waiver thereof, nor shall a single or partial exercise of any right, power, or privilege preclude any other or further exercise of

any other right, power or privilege. In no event shall the making by the County of any payment due to the Contractor constitute or be construed as a waiver by the County of any breach of a provision of this Agreement, or any default which may then exist, on the part of the Contractor. The making of any such payment by the County while any such breach or default shall exist, shall in no way impair or prejudice any right or remedy available to the County in respect to such breach or default.

XIV. MODIFICATION OF AGREEMENT. Modifications, amendments, or waivers of any provisions of this Agreement may be made only by the written mutual consent of the parties hereto.

XV. ASSIGNMENT OR SUBCONTRACTING. Neither party may assign or subcontract all or a portion of this Agreement without the prior written consent of the other party.

XVI. PURPOSE OF SECTION TITLES. The titles of the sections set forth in this Agreement are inserted for the convenience of reference only and shall be disregarded when construing or interpreting any of the provisions of this Agreement.

XVII. COMPLETE AGREEMENT. This Agreement, the Attachment A, contain all the terms and conditions agreed upon by the parties hereto, and no other agreements, oral or otherwise, regarding the subject matter of this Agreement or any part thereof shall have any validity or bind any of the parties hereto.

XVIII. AGREEMENT PERIOD. This Agreement shall become effective on the date in which it has been fully signed by the authorized representatives of both parties ("Effective Date"). All Services for the Program including all items on the final punch list shall be completed by no later than December 31, 2024 ("Completion Date"). All obligations of the Contractor set forth in this Agreement which extend to beyond the Completion Date of the work shall survive said completion and remain in full force and effect for the time set for the performance of said obligations.

Notwithstanding any other provision in this Agreement to the contrary, the County may terminate this Agreement, with or without cause, upon 5 calendar days' prior written notice to the Contractor. In the event this Agreement is prematurely terminated without cause as set forth herein, the Contractor shall be compensated for services completed as of the effective date of termination in accordance with Section II of this Agreement.

XIX. IRAN LINKED BUSINESS. The Contractor has certified to the County that neither it nor any of its successors, parent companies, subsidiaries, or companies under common ownership or control of the Contractor, are an "Iran Linked Business" engaged in investment activities of $20,000,000.00 or more with the energy sector of Iran, within the meaning of Michigan Public Act 517 of 2012. It is expressly understood and agreed that the Contractor shall not become an "Iran linked business" during the term of this Agreement.

NOTE: IF A PERSON OR ENTITY FALSELY CERTIFIES THAT IT IS NOT AN IRAN LINKED BUSINESS AS DEFINED BY PUBLIC ACT 517 OF 2012, IT WILL BE RESPONSIBLE FOR CIVIL PENALTIES OF NOT MORE THAN $250,000.00 OR 2 TIMES THE AMOUNT OF THE CONTRACT FOR WHICH THE FALSE CERTIFICATION WAS MADE, WHICHEVER IS GREATER, PLUS COSTS OF

INVESTIGATION AND REASONABLE ATTORNEY FEES INCURRED, AS MORE FULLY SET FORTH IN SECTION 5 OF ACT NO. 517, PUBLIC ACTS OF 2012.

XX. SEVERABILITY OF INVALID PROVISIONS. If any part of this Agreement is declared to be invalid, unconstitutional, or beyond the authority of either party to enter into or carry out, such part shall be deemed deleted and shall not affect the validity of the remainder of this Agreement, which shall continue in full force and effect. If the removal of such provision would result in the illegality and/or unenforceability of this Agreement, this Agreement shall terminate as of the date in which the provision was found invalid, unconstitutional or beyond the authority of the parties and the Contractor shall be reimbursed for all services which it has provided under this Agreement up to the date of termination.

XXI. CERTIFICATION OF AUTHORITY TO SIGN AGREEMENT. The people signing this Agreement on behalf of the parties hereto certify by their signatures that they are duly authorized to sign on behalf of said parties and that this Agreement has been authorized by said parties.

THE AUTHORIZED REPRESENTATIVES OF THE PARTIES HERETO HAVE FULLY EXECUTED THIS AGREEMENT FOR RECYCLING SERVICES.

COUNTY OF LEELANAU

By: _____
Ty Wessell, Chairman
County Board of Commissioners

Date: _____

BAY AREA RECYCLING FOR COMMUNITY

By: _____
(Signature)

Name: ANDREW GALE
(Print or Type)

Title: PRESIDENT
(Print or Type)

Date: 10/17/23

APPROVED AS TO FORM
FOR COUNTY OF LEELANAU
COHL, STOKER & TOSKEY, P.C.

By: Jennifer L. Bliss 10/2/2023

N:\Client\Leelanau\Agreements\Bay Area Recycling for Charities\2024 Service Agreement with BARC v1.docx
Leelanau Co. #22-011E

ATTACHMENT A

LEELANAU COUNTY
BOARD POLICY

GENERAL SUBJECT:	Administration/General (County Administrator)	Policy No.	13
SPECIFIC SUBJECT:	Insurance Requirements Policy	Adopted:	04/17/1990
		Revised:	02/15/1994
		Revised:	05/21/2013
		Revised:	12/19/2017

APPLIES TO: All Leelanau County Employees and Elected Officials.

PURPOSE: The Leelanau County Board of Commissioners hereby establishes a policy on insurance requirements for contractors, vendors, individuals, and/or organizations receiving monies from Leelanau County. The purpose of these requirements is to assure that the parties referenced above are accepting appropriate responsibility for insuring their own operations, and that they are not unduly exposing Leelanau County taxpayers to liability and/or loss.

The Contractor, and any and all of their subcontractors, shall not commence any work until they have met the insurance requirements outlined in this policy. All coverage shall be with insurance companies licensed and admitted to do business in the State of Michigan. All coverages shall be with insurance carriers acceptable to Leelanau County and have a minimum A.M. Best Company (www.ambest.com) Insurance Report rating of not less than A or A- (Excellent).

1. Workers' Compensation Insurance: The Contractor shall procure and maintain during the life of the contract, Workers' Compensation Insurance, including Employers' Liability Coverage, in accordance with all applicable statutes of the State of Michigan. Workers' Compensation and Employers' Liability Insurance are required if the party hires one or more persons or currently has employees. If a party currently does not have any employees, and is a sole proprietor, an affidavit must be filed with the County Clerk stating that the party currently has no employees and will not hire any while working for Leelanau County as a contractor or a subcontractor, etc. If a party currently does not have any employees and is incorporated (Inc.) or a limited liability corporation (LLC), they must file a Notice of Exclusion, WC-337, with the State of Michigan and then provide a copy of the State-approved document to the County Clerk.

2. Contractor's Tools & Equipment: The Contractor shall be responsible for insuring all its tools, equipment and materials which it may leave at the Project's work site. The County shall not be responsible for any loss or damage to the Contractor's tools, equipment and materials.

3. Professional Liability (Errors and Omissions) Insurance: [For contracts for professional services, e.g., Architect, Engineers, Doctors, Dentist, etc.] The Contractor shall possess Professional Liability Insurance (errors and omissions) with limits of not less than $1,000,000.00 per occurrence or claim. If the Professional Liability Insurance is on a claims-made basis, the Contractor shall purchase extended reporting period "tail" coverage for a minimum of three (3) years after termination of the Agreement.

4. Commercial General Liability Insurance: The Contractor shall procure and maintain during the life of their contract, Commercial General Liability Insurance on an "Occurrence Basis" with limits of liability not less than $1,000,000.00 per occurrence and aggregate combined single limit, Personal Injury, Bodily Injury, and Property Damage. Coverage shall include the following extensions: (A) Contractual Liability; (B) Products and Completed Operations; (C) Independent Contractors Coverage; (D) Broad Form General Liability Extensions or equivalent; (E) Deletion of all Explosion, Collapse, and Underground (XCU) Exclusions, if applicable.

5. Motor Vehicle Liability: The Contractor shall procure and maintain during the life of their contract Motor Vehicle Liability Insurance, including Michigan No-Fault Coverage, with limits of liability not less than $1,000,000.00 per occurrence combined single limit, Bodily Injury, and Property Damage. Coverage shall include all owned vehicles, all non-owned vehicles, and all hired vehicles.

6. Deductibles: The Contractor shall be responsible for paying all deductibles in its insurance coverages.

7. Additional Insured: Commercial General Liability and Motor Vehicle Liability Insurance, as described above, shall include an endorsement stating that the following shall be ***Additional Insureds***: Leelanau County, all elected and appointed officials, all employees and volunteers, all boards, commissions, and/or authorities and board members, including employees and volunteers thereof. The Contractor's insurance coverages shall be primary to the Additional Insureds and not contributing with any other insurance or similar protection available to the Additional Insureds, regardless of whether said other available coverage be primary, contributing or excess.

8. Cancellation Notice: Workers' Compensation Insurance, Commercial General Liability Insurance, and Motor Vehicle Liability Insurance, as described above, shall include an endorsement stating the following: "It is understood and agreed that Thirty (30) days Advance Written Notice of Cancellation, Non-Renewal, Reduction, and/or Material Change shall be sent to the office of the Leelanau County Administrator.

9. Owners' and Contractors' Protective Liability: [For Contracts for Construction or Large Repair or Maintenance Projects such as road work, sewer work or building projects] The Contractor shall procure and maintain during the life of the contract, a separate Owners' and Contractors' Protective Liability Policy with limits of liability not less than $1,000,000.00 per occurrence and aggregate combined single limit, Personal Injury, Bodily Injury, and Property Damage. Leelanau County shall be "Named Insured" on said coverage. Thirty (30) day Notice of Cancellation shall apply to this policy.

10. Proof of Insurance Coverage: The Contractor shall provide Leelanau County at the time that the contracts are returned by him/her for execution, A "Certificate of Liability Insurance," on Accord Form #25, with the necessary coverages included, as listed below:

    a. Certificate of Insurance for Workers' Compensation Insurance;
    b. Certificate of Insurance for Commercial General Liability Insurance;
    c. Certificate of Insurance for Vehicle Liability Insurance;
    d. Certificate of Insurance for Professional Liability Insurance on Projects where such insurance is required.
    e. Original Policy, or original Binder pending issuance of policy, for Owners' & Contractors' Protective Liability Insurance, where such insurance is required.
    f. If so requested, Certified Copies of all policies mentioned above will be furnished.

11. If any of the above coverages expire during the term of the contract, the Contractor shall deliver renewal certificates and/or policies to the Leelanau County Administrator at least ten (10) days prior to the expiration date.

Failure to comply with these insurance requirements could result in the termination of a contract or delay in receipt of funds. Questions regarding the scope of applicability of this policy may be directed to the Leelanau County Administrator.

2. Approval of Financials:
   a. October Parks Financials
      - Revenue and Expense Report (Period Ending October 31, 2023)
      - Transaction History Listing Report (October 1, 2023 Thru October 31, 2023)

      Bradley reported expenditures at 52 percent of budget. He added that tractor maintenance and two other projects, one totaling about $5,000.00, were still outstanding. Charges to "Memberships Dues and Fees" seemed high and Lautner questioned the reason. Bradley explained that state fees for water permits were charged to that account which Godbout said were miscategorized. Lautner questioned the balances in "Taxable and Nontaxable Travel" accounts and questioned if they should be increased, but no decision was made.

Motion by Godbout to approve the financials, as presented. Seconded by Frerichs.
Discussion – Frerichs asked Lautner if the Board of Commissioners (BOC) approved rolling over to 2024 the Parks Commission's unspent Capital Outlay. Lautner responded that she thought the BOC would approve the request; however, she did not think an additional $100,000.00 would be approved to pave the walking trail at Myles Kimmerly Park.
Ayes – 7 (Arens, Christensen, Frerichs, Godbout, Lautner, Popa, Walter)
No – 0 Absent – 3 (Barrons, Noonan, Ross) Motion Passes.

   b. Administrative Assistant –
   i. Approval of Stipend for FY2023 Work:
      Motion by Lautner to recommend to the County Board of Commissioners approval of the budgeted stipend for Executive Assistant, Laurel S. Evans, in the amount of $3,600.00 for work performed as the Parks Administrative Assistant for Fiscal Year 2023. Seconded by Arens.
      Discussion: Godbout inquired and Evans confirmed that the stipend was for work performed in support of the Parks Commission in Fiscal Year 2023.
      Ayes – 7 (Arens, Christensen, Frerichs, Godbout, Lautner, Popa, Walter)
      No – 0 Absent – 3 (Barrons, Noonan, Ross) Motion Passes.

   ii. New Administrative Assistant Search:
      For those who were unaware, Evans announced her retirement stating that her last day in the office would be December 8, 2023. She added that due to unused vacation, she would be "on the books" through March. Evans suggested that the group work with the Human Resources Director to find a suitable replacement. Christensen told Evans that she would be missed.

      Christensen inquired how Lori Eubanks is paid to transcribe the minutes. Evans explained that Eubanks is a Temporary Office Assistant tasked to the Parks and Recreation Commission and that she is paid from the Parks budget.

      Christensen thought the next step should be to task Chair Noonan to appoint a non-quorum committee to move forward with "figuring out where we go from here."

EXECUTIVE DOCUMENT SUMMARY

Department: Parks & Recreation	**Submittal Dates**
Contact Person: Steve Christensen	☑ Select Meeting Type: Executive Board
Telephone Number: 231-256-8263	Date of Meeting: 11/14/2023
Financial/Source Selection Method	Vendor:
☑ Select One: Budgeted	Address/ Phone:
☐ Other:	
☐ *Account No.:* 101.850.756	
☐ *CIP Project?*	
☐ *If Grant, Match Account No.:*	**Description:** Boards/Comm. Recommendation

Budgeted Amount: $ 3,600.00 Contracted Amount: $ 3,600.00

Document Description

☐ **Request to Waive Board Policy on Bid Requirements** ☐ **Financial Review Completed** ☐ **Department Head/Elected Official Authorization**

This is a request from the Leelanau County Parks and Recreation Commission to approve the payment of a stipend to Executive Assistant Laurel Evans for her additional duties on behalf of the Parks Commission as its designated administrative assistant.

Two years ago during the FY 2022 Budget process, the Commission had noted the need to employ an administrative assistant, and subsequently requested the Board approve the position (Parks Executive Committee minutes from June, 2021, attached).

A request for the first of two payments for 2022 had been made in May, 2022, with a final request for the balance made and subsequently approved by the County Board during its December 30, 2022, Special Session (documentation attached).

The Parks Commission again passed a recommendation in January, 2023, "reaffirming the appointment of an administrative assistant..." (see attachment).

The Commission then passed the following recommendation on a 7-0 vote during its November 1, 2023, Regular Session:

Motion by Lautner that the Parks and Recreation Commission recommend to the County Board of Commissioners approval of the budgeted stipend for Executive Assistant Laurel S. Evans, in the amount of $3,600.00, for work performed as the Parks Administrative Assistant for Fiscal Year 2023. Seconded by Arens.

Suggested Recommendation:

I move to recommend that the County Board of Commissioners approve payment of the budgeted stipend in the amount of $3,600.00 to Executive Assistant Laurel S. Evans for work performed as the Parks Administrative Assistant for FY2023 as recommended by the Parks and Recreation Commission; funds to come from Parks & Recreation #850.756.

Department Approval: Date: 11/09/2023

Leelanau County Parks and Recreation Commission
Executive Committee – Wednesday, June 16, 2021
Leelanau County Government Center, Suttons Bay, Michigan
Tentative Minutes – Meeting Recorded
https://www.leelanau.gov/meetingdetails.asp?MAId=2157

The Executive Committee of the Leelanau County Parks and Recreation Commission was called to order at 3:37 p.m. by Commission Chairman Casey Noonan.

Chairman Noonan waived the Pledge of Allegiance, as it was recited at the preceding Regular Session.

Roll Call: Dave Barrons, *Vice-Chairman*
Steve Christensen, *Secretary*
Casey Noonan, *Chairman*

Also in Attendance: Melinda Lautner, Parks & Rec Commissioner
John Popa, Parks & Rec Commissioner
Rick Robbins, Parks & Rec Commissioner
Laurel Evans, Executive Assistant

Public Comment:
Call-in Number: 231-256-8109 – there was no public comment.

Agenda Addition/Deletions:
Barrons noted Popa's suggestion to add the request for the addition of a skilled assistant for the Parks and Recreation Commission to handle miscellaneous administrative tasks, such as writing and reviewing bids, and overseeing park plans and grant development. The proposed position would be a part-time, contracted position with an annual salary of $25,000.00. Discussion ensued on Popa's suggestion (handout link: https://www.leelanau.gov/downloads/popa_meetings_and_budget_06162021.pdf). Barrons remarked there were times during a recent grant application process he had thought, 'Gee, the County should have a professional' to assist with the grant-writing process.

Action Items –
Budget Discussion/Recommendations. Chairman Noonan said he is unsure of the documents needed to submit the request for a skilled assistant position for the Parks Commission, but thought the recruitment was worth pursuing. He said because the Commission has no Parks and Rec Director, they struggle administratively and the addition of this position would lighten the workload for Maintenance Worker W. Scott Bradley, who is frequently taken off task to provide assistance on administrative issues.

Lautner remarked she felt that it was unlikely that the Board of Commissioners would approve the position; however, what has been proposed has merit, and yet, should the County have

someone they use (for grant-writing), perhaps on a contractual basis…we could use a grant writer in every department. She suggested looking into hiring a graduate student. We could put it in the budget to hire a grant writer. Barrons said the position would be more than just writing grants. Discussion ensued. Barrons remarked, could Parks and Recreation contract for an "executive assistant"? Lautner remarked, you could always ask for it. Discussion followed on Bradley's duties. Noonan said this is one of the few "departments" that doesn't have a director; that is why we struggle to do what we do. Popa asked and several responded Bradley's supervisor is Maintenance Director Jerry Culman II. Noonan added (this type of position) has been kicked around for a while. Bradley relies on us to do the "legwork". Robbins questioned if work-release inmates could be utilized for parks duties in the summer months.

Lautner added the County is considering potentially hiring an HR person and perhaps grant writing could be added to the job description. She added until just a few years ago, Parks did their own minutes. We have been fortunate to have Evans step in and provide guidance. Noonan complimented Evans for her assistance. Lautner said the Commission's best bet would be to see if the new HR person could write grants, and have that part of their (job) description.

Chairman Noonan asked and Evans responded Noonan should work with Chief Deputy County Clerk Jennifer L. Zywicki on any budget related questions. Christensen noted it took a while to get a part-time parks person for Bradley. This request is unrelated to the rest of the budget discussion; the top portion (detailing employees), we do not touch and is not part of what we are talking about. We could certainly go to the Board of Commissioners and ask for a person. Popa suggested looking at the line item for "contractors." More comments followed on contracted help. Noonan said if we are looking for a contracted position, it would be better to ask for that separately, as Christensen suggested. Noonan and Popa to follow-up with County Administrator Chet Janik. Discussion followed. ***Consensus to meet with County Administrator Chet Janik for guidance on how to submit the request.***

A discussion ensued regarding a May 19, 2021, email from Commissioner Popa that contained five budget requests:

1) Create a safety walk-around the old putting green at Veronica Valley Park - $15,000.00;
2) Pave the parking lot at Veronica Valley Park - $61,000.00 to $80,000.00;
3) Add a skilled assistant for the Parks and Recreation Commission - $25,000.00;
4) Purchase playground equipment at Old Settlers Park - $12,000.00 to $20,000.00 (though it was noted Northport's installation was $22,000.00); and
5) Paint the bridge at Veronica Valley Park (no dollar figure provided. Popa said he thought the bridge did not need painting for another five years.)

Christensen said we will need to organize this; the Executive Committee needs to make a list and make some choices. Public input is welcome. Barrons said if we put in for a parking lot upgrade (at Veronica Valley Park [VVP]), do we want to leave out painting (the bridge)? Popa

Brief comments continued.

Open Meetings Act (OMA):
Attorney Stoker at the request of Administrator Janik gave a brief update on the Open Meetings Act and attendance/accommodations about a member in the military on duty. There are bills pending to change the OMA, although they are gaining traction. Attorney Stoker also addressed what is deliberation. Most of the key Open Meetings Act (OMA) cases come out of Leelanau County. If you delegate items and hold separate meetings, three people are the group that is subject to the Open Meetings Act and that is part of deliberating to a decision. He also covered chance meetings, which are not the same; however if you chance meet with four Commissioners and you decide or respond to email and you have four Commissioners, you are in violation. Commissioners should avoid email chains due to both civil and criminal penalties. Janik asked Attorney Stoker to address text messages that are being sent during the meetings and even if on private devices they will be treated the same, just like passing paper back and forth. There is a whole slew of things that slide into the OMA and you need to be careful and think about that policy-wise and access to the means and you might have. Commissioner Soutas-Little asked if you are listening as a member of the public and Attorney Stoker responded that if you are there as the public, you get no more rights than the public, you are okay. You cannot have any discourse and again you are walking on thin ice.

Review of Non-Union Pay Scale - Executive Assistant:
Commissioner Lautner commented that there is a couple of things that need to be tweaked. She believes that overall the employees are very well paid up here with the package offered. Lautner is not in favor of a full-blown salary schedule (study). Lautner continued and restated that the employees are very well paid with the benefits. It is going to be blown-up and some won't like the consideration of being paid anything lower and she wants to avoid that.

Commissioner Lautner continued that if Commissioners put the stipend in the budget for the assistance with the Parks & Recreation (P & R), can it just be received. Administrator Janik indicated that he will not do it without a Board motion. Janik continued that it can be done in recognition of past work and it can be done retroactively. He continued that this is in recognition of work accomplished.

MOTION BY LAUTNER TO RECOMMEND TO THE LEELANAU COUNTY BOARD OF COMMISSIONERS BEGIN COMPENSATING THE EXECUTIVE ASSISTANT FOR HER MANAGEMENT OF PARKS AND RECREATION AS BUDGETED ($2,000.00). SECONDED BY ROBBINS.

Discussion – Commissioner Soutas-Little will not vote for this for the same reason she has not voted for the others. Soutas-Little continued that Ms. Evans does a marvelous job and there was overtime involved for that. If her position warrants more money, it should be adjusted and not give an award. This points out that there are discrepancies and doing it piece meal is not the way to do it.

Commissioner Lautner is not recommending that we change the salary of Executive Assistant. This stipend has been done in the past and she does not really like doing it, but it does recognize the added workload of handing the extra work of the Parks and Recreation which is another department with its own budget. It is a workload and something to juggle. Lautner continued that by doing a

stipend, it is not adjusting her salary. Administrator Janik added that before Evans got involved, the Commissioners were constantly getting frustrated because P & R were constantly coming forward with recommendations without bids. Since she has been involved, you have not had to deal with that. Janik continued that it is a temporary thing and you will want to look at it and referenced Mr. John Popa when he talked about a Facilities Manager, which could address this. This $2,000.00 is in recognition of her efforts over the past couple of years.

Commissioner Rushton asked if this management by the Executive Assistant is provided outside her job description, so we need someone to fill that position. Janik added that it is a large budget and large department, with no oversite to it. She is filling the oversite of it. Janik continued with comments and the consideration of the Facilities Management position. That person could oversee P & R or have the Administrator oversee it. There needs to be a long-term plan. Rushton will support for past work, but she does agree that we need to take a look at how to move forward with providing the services that need to be here and how that is going to be managed. Janik thinks that it is a much bigger discussion and there does need to be a long-term plan. Janik commented on the complexes, the addition of facilities, staffing and the Management. What we need is someone to fill that position. Discussion ensued

Motion/Recommendation restated by Commissioner Lautner.

MOTION BY LAUTNER TO RECOMMEND TO THE LEELANAU COUNTY BOARD OF COMMISSIONERS THAT OUR ADMINISTRATIVE [EXECUTIVE] ASSISTANT BE COMPENSATED FOR HER ADMINISTRATION OF PARKS AND RECREATION AS BUDGETED IN THE AMOUNT OF $2,000.00. SECONDED BY ROBBINS.
Discussion – none.
AYES – 6 (Lautner, Robbins, Rushton, Wessell, Allgaier, Bahle)
NO -1 (Soutas-Little) RECOMMENDATION PASSES.

Chairman Wessell said that he would like to entertain a motion to review. Commissioners Allgaier and Bahle would like a salary study. Commissioner Rushton said that Administrator Janik is good and he can do it and our HR Department can look into that. Janik offered comments.

<u>Review of Non-Union Pay Scale - Elected Officials</u>:
Not addressed.

<u>Sheriff's Office – Potential Jail Inmate Board Contract, Kalkaska County</u>:
Sheriff Mike Borkovich, Undersheriff James Kiessel, and Lt. Todd Roush were all present regarding the request before Commissioners which was explained by Borkovich. This would allow them to house up to 20 inmates at $30.00 per day. It is a bit of a hybrid.

MOTION BY RUSHTON TO RECOMMEND TO THE LEELANAU COUNTY BOARD OF COMMISSIONERS TO APPROVE THE INMATE BOARDING CONTRACT WITH KALKASKA COUNTY, PENDING FINAL APPROVAL BY CORPORATE COUNSEL, AND AUTHORIZE THE BOARD CHAIR TO SIGN SAME. SECONDED BY ALLGAIER.
Discussion – Commissioner Lautner asked why would the County not house more if the amount of staffing is the same whether there is one inmate or 70? Sheriff Borkovich responded to the stress on

BOARD OF COMMISSIONERS
Rick Robbins, District #1
Debra L. Rushton, District #2
Lois Bahle, District #3
Ty Wessell, District #4
Patricia Soutas-Little, District #5
Gwenne Allgaier, District #6
Melinda C. Lautner, District #7

Chet Janik, County Administrator

Leelanau County Government Center
8527 E. Government Center Drive, Suite #101
Suttons Bay, Michigan 49682
(231) 256-9711 ♦ (866) 256-9711 toll free
(231) 256-0120 fax
www.leelanau.gov ♦ cjanik@leelanau.gov

To: Board of Commissioners

From: Chet Janik

Date: December 19, 2022

Re: Parks and Recreation Commission Administrative Assistant Stipend

During the budget process for the 2022 fiscal year, the Commissioners agreed in October 2021 to designate $3,600.00 in the Parks and Recreation Commission budget for an administrative assistant. The stipend was paid to Executive Assistant Laurel Evans for her continued leadership and management of the Commission in terms of attending the meetings, following proper protocol, drafting the requests for proposals and solicitation of bids.

During the May 2022 Board meetings, the Commissioners approved the first payment of $2,000 of the stipend and attached are the minutes from the May 10 meeting.

At the December 30 special meeting, I am recommending that the Commissioners approve the second portion of the budgeted stipend, which is $1,600.00.

portion of the underground towers. Commissioner Soutas-Little addressed the questions and the beginning of Point Broadband and they are working with Cherryland.

Parks and Recreation Commission – Clarification of approved budget item:
Administrator Allen briefly explained the item before Commissioners and recognition of Executive Assistant Lauren Evans' support of the Parks and Recreation Commission. Allen commented on what she has heard from a historical perspective of the assistance provided.

Chairman Wessell referenced Administrator Janik's recommendation on the stipend to Evans.

#335-12312022 Special Session
MOTION BY ALLGAIER THAT THE LEELANAU COUNTY BOARD OF COMMISSIONERS APPROVE THE SECOND PORTION OF THE BUDGETED STIPEND FOR EXECUTIVE ASSISTANT LAUREL E. EVANS FOR WORK WITH PARKS & RECREATION COMMISSION WHICH IS $1,600.00. SECONDED BAHLE.
Discussion – brief with comments by Evans.
AYES – 6 (Allgaier, Bahle, Lautner, Robbins, Soutas-Little, Wessell)
NO – 0 ABSENT – 1 (Rushton) MOTION CARRIED.

Parks Administrative Assistant
Regular Session, November 1, 2023

Excerpt: January 3, 2023, Parks Regular Session –

…

Parks Plan/Parks Administrative Assistant Stipend:

a. 2025-2029 Plan – Evans directed the group to review the parks plan. Godbout added that they needed to take steps in 2023 to align the current Master Plan, the Capital Improvement Plan, and the Parks budget in preparation for the development of a new plan in 2024, in order to have a new plan in place by 2025. Christensen reported that the Myles Kimmerly Park Plan is a work in progress. Lautner added that the plan for Old Settlers Park was about five or six years old, but that it would take minimal work to bring it current.
b. FY 2023 Stipend – To ensure the Parks Administrative Assistant $3,600 annual stipend was included in the Parks 2023 budget, Evans suggested a motion reaffirming the Administrative Assistant appointment that was made at the August 18, 2021, Parks and Recreation Commission meeting. How the compensation would be paid (monthly, yearly) has yet to be determined.

Motion by Lautner that the Parks and Recreation Commission recommend to the County Board of Commissioners to reaffirm the appointment of a Parks Commission Administrative Assistant to assist and guide the Parks and Recreation Commission. Seconded by Christensen.
No further discussion.
Ayes – 9 (Barrons, Christensen, Frerichs, Godbout, Lautner, Noonan, Popa, Ross, Walter)
No – 0 Absent – 1 (Arens) Motion Carried.

PROPOSED RECOMMENDATION:

I move that the Parks and Recreation Commission recommend to the County Board of Commissioners approval of the budgeted stipend for Executive Assistant Laurel S. Evans in the amount of $3,600.00 for work performed as the Parks Administrative Assistant for FY 2023.