HULBERT Engineering and Land Surveying, DPC

Project Manual & Specifications

Design Plans for
Grand Avenue Street Reconstruction
Harrison Street to Baldwin Street
Village of Johnson City

Project Sponsor: Town of Union
Community Development Block Grant (CDBG) Program

Broome County, New York State
February 15, 2023

Project Owner: Village of Johnson City
243 Main Street, Johnson City, NY 13790

Joshua Holland
Director of Public Services

Civil and Environmental Engineering Services

Construction Engineering & Administration Services

Land Surveying and Mapping Services

Centre Plaza
53 Chenango Street, 8th Floor
Binghamton, NY 13901-2805

Phone: 607.723.0799
Fax: 607.723.0337
www.hulberteng-ls.com

LICENSED PROFESSIONAL ENGINEER
GENE HULBERT JR.
073582-1
UNIVERSITY OF THE STATE OF NEW YORK

Project No. 22050.02

© 2023 Hulbert Engineering and Land Surveying, DPC

TABLE OF CONTENTS

SECTION 00 - NOTICE TO BIDDERS AND BID PACKET: ITEMIZED BID FORM AND SUPPLEMENTS

SECTION 01 - INSTRUCTIONS TO BIDDERS

1. Use of Separate Bid Form
2. Statement of Work
3. Interpretations or Addenda
4. Inspection of Site
5. Agreement
6. Alternative Bids
7. Bids
8. Bid Guaranty (Required)
9. Collusive Agreements
10. Statement of Bidder's Qualifications
11. Corrections
12. Time for Receiving Bids
13. Opening of Bids
14. Withdrawal of Bids
15. Award of Contracts: Rejection of Bids
16. Execution of Agreement: Performance and Payment Bond
17. Wages and Salaries
18. Exemptions from Sales and Use Tax
19. Equal Employment Opportunity
20. Approximate Estimate of Quantities
21. Preparation of Proposal
22. Federal Requirements
23. Other Requirements

--- Exhibit A - Certificate of Liability Insurance

--- NYS Prove It to Move It Program

SECTION 02 - GENERAL CONDITIONS PART I

101. Definitions
102. Superintendence by Contractor
103. Subcontracts
104. Other Contracts
105. Progress Schedule and Notice to Proceed
106. Payments
107. Changes in the Work
108. Claims for Extra Cost
109. Termination, Delays and Liquidated Damages
110. Assignment or Novation
111. Disputes
112. Technical Specifications and Drawings
113. Requests for Supplementary Information
114. Permits and Codes

115. Care of Work
116. Accident Prevention
117. Sanitary Facilities
118. Use of Premises
119. Removal of Debris, Cleaning, Etc.
120. Review by Owner
121. Final Inspection
122. Deduction for Uncorrected Work
123. Insurance
124. General Guaranty
125. Risk of Loss
126. Live Utilities and Other Property
127. Risks Assumed by the Contractor
128. Responsibilities of the Engineer
129. Rejected Work and Materials
130. Character of Workmen
131. Shop Drawings
132. Exemption from Sales and Compensating Use Taxes of the State of New York and of Cities and Counties
133. O.S.H.A. Requirements
134. MUTCD Requirements

SECTION 03 - GENERAL CONDITIONS PART II - FEDERAL LABOR STANDARD PROVISIONS

201. Minimum Wages
202. Fringe Benefits as Part of Wages
203. Fringe Benefits as Part of Overtime
204. Work done by Laborers
205. Wage Determination to be Posted at Site
206. Additional Classifications Needed
207. Disputes between Contractor and Contracting Agency
208. The Wage Rate
209. Fringe Benefits Not Determined for Work Classification
210. Unfunded Plans and Programs
211. Withholding
212. Payroll Sheets and Basic Records
213. Payroll Records
214. Each Payroll Must Be Accompanied by a “Statement of Compliance”
215. Laborer and Mechanic
216. Falsification
217. Inspection of Payroll Records
218. Use of Apprentices and Trainees
219. Equal Employment Opportunity
220. Compliance with Copeland Act Requirements
221. Subcontractors
222. Contract Termination: Debarment
223. Compliance with Davis Bacon and Related Act Requirements

224. Disputes Concerning Labor Standards
225. Certification of Eligibility
226. Complaints, Proceedings or Testimony by Employees
227. Contract Work Hours and Safety Standards Act
228. Health and Safety

SECTION 04 - GENERAL CONDITIONS PART III - NON-FEDERAL LABOR STANDARD PROVISIONS
301. General Provisions
302. Other Stipulations
303. Minimum Wage Rates for Laborers and Mechanics
304. Workmen's Compensation
305. Article 8, Labor Law
306. Non-Discriminatory Provisions

SECTION 05 - SPECIAL CONDITIONS PART IV AND SPECIAL NOTES
401. Project Area
402. Time for Completion
403. Responsibilities of Contractor
404. Communications
405. Work Not Included in Contract
406. Contract Documents and Drawings
407. Existing Utilities; Utility Service
408. Care of Public and Private Property
409. Temporary Service
410. Material
411. Construction Review
412. Reference Specifications
413. Property Irons
414. Blasting
415. Environmental Conservation
--- Special Notes - Exemption from Sales and Compensating Use Taxes of the State of New York and Cities and Counties
--- Special Notes - Prohibition of Use of Lead-Based Paint and Elimination of Lead-Based Hazard
--- Special Notes - National Historic Preservation Act of 1966
--- Special Notes - Clean Air Act and Federal Water Pollution Control Act
--- Records Maintenance

SECTION 06 - LABOR STANDARDS
Labor Standards Compliance Requirements for Self-employed Laborers and Mechanics
OSHA Regulations, 29 CFR, pt 1926

SECTION 07 - TECHNICAL SPECIFICATIONS
NYSDOT STANDARD SPECIFICATIONS

All work, materials, and construction methods contemplated under this contract are to be covered by and in conformity with the New York State Standard Specifications of January 1, 2023 except as modified on these plans and in the itemized proposal.

THE CONTRACTOR SHOULD PURCHASE A NEW YORK STATE STANDARD SPECIFICATIONS BOOK AND BECOME FAMILIAR WITH IT.

The current NYSDOT Standard Specifications are available on the Department's website using the following link:
https://www.dot.ny.gov/main/business-center/engineering/specifications/updated-standard-specifications-us

In order to ascertain the current additions and modifications of the Standard Specifications, it is necessary to consult the Engineering Information Issuance System on the Department's website using the following link:
https://www.dot.ny.gov/main/business-center/consultants/forms-publications-and-instructions/engineering-information-issuance-system

SPECIAL SPECIFICATIONS

Item 520.09000010	Saw Cutting Asphalt Concrete
Item 655.05020010	Frames and Covers for Sanitary Sewer Manholes
Item 655.16000011	Remove and Dispose of Frames and Grates
Item 664.40480006	Precast Sanitary Sewer Manhole

TOWN OF UNION SPECIFICATIONS

Item 26	Sanitary Sewer Lateral Replacement
Item 27	Polyvinyl Chloride Sanitary Sewer

SECTION 00 – NOTICE TO BIDDERS AND BID PACKET: ITEMIZED BID FORM AND SUPPLEMENTS

TOWN OF UNION, NEW YORK

TOWN OF UNION
NOTICE TO BIDDERS

PLEASE TAKE NOTICE that pursuant to a motion of the Town Board of the Town of Union, Broome County, New York, sealed bids for in the Town of Union, New York, will be received by the Town Clerk at 3111 East Main Street, Endwell, New York until **10:00 am** on **March 23rd, 2023** at which time they will be opened and read aloud. At this time, the public is not permitted to attend the bid opening.

Bids must be submitted in sealed envelopes at the above address and shall bear on the face thereof the name and address of the bidder and shall be marked:

GRAND AVENUE PHASE 6 STREET RECONSTRUCTION
HARRISON STREET TO BALDWIN STREET
VILLAGE OF JOHNSON CITY
TOWN OF UNION FFY 2022 CDBG PROGRAM

Beginning on **February 19th 2023** specifications, bidding, and contract documents may be examined at no cost at the office of the Town Clerk or obtained from the Planning Director via email: ckylor@townofunion.com. No hard copies will be available for this project.

A digital version of the Prevailing Wage Schedule **(PRC# 2022011871)** and other project related information may be obtained from the Town of Union website at:

https://townofunion.com/government/public-notices/public-hearings-legal-notices/bids-rfp-s.html

If bidders to check the town web page prior to submitting a bid/proposal to determine if any clarifications or updates to the plans or specifications have been posted. Questions or comments relating to the bid specifications must be submitted in writing to ckylor@townofunion.com. A summary of the questions received and the town's responses will be posted periodically on the town web page.

A bid guarantee in the form of cash, certified check or bid bond in the amount of five percent (5%) of the proposal will be required of all bidders.

Contractors shall document good faith efforts to solicit active participation by Minority/Women-Owned Business Enterprises (M/WBE) for provision of labor and/or materials as appropriate.

The Town of Union is an Equal Opportunity Employer and encourages all Section 3 and Minority/Women-Owned Business Enterprises (M/WBE) to submit proposals.

The Town Board reserves the right to reject any and all bids, to waive any irregularities, and to re-advertise for bids at its discretion.

LEONARD J. PERFETTI
TOWN CLERK

PROPOSAL SUMMARY FORM

Name of Firm: _____

PROJECT	TOTAL PROPOSED COST
GRAND AVENUE PHASE 6 RECONSTRUCTION- HARRISON STREET TO BALDWIN STREET- JOHNSON CITY, NY 13790 BID TOTAL	**$ _____ (written in words)**
	$ _____ (written in figures)

The Undersigned, having carefully examined the existing conditions of the Project Area affecting the cost of the work, and with the Contract Documents, hereby proposes to furnish all supervision, technical personnel, labor, materials, machines, tools, equipment, and services and to perform and complete the specific work in strict accordance with the plans and specifications.

In submitting this Bid, the Bidder understands that the right is reserved by the town to reject any and all Bids. If written notice of the acceptance of this Bid is mailed or delivered to the undersigned within thirty (30) days after the opening thereof, or at any time thereafter before the Bid is withdrawn, the undersigned agrees to execute and deliver an Agreement within five (5) days after the agreement is presented to him for signature.

The substantial completion date for this project will be **July 16th, 2023**. The final completion date for this project will be **July 25th, 2023.**

Signature of Bidder_____

Date: _____

ITEMIZED PROPOSAL

Note: All Unit Prices and Totals Must be Written or Typed in Black Ink

Grand Avenue Reconstruction Phase 6 - Harrison Street to Baldwin Street - CDBG FFY 2022

ITEM NO.	BASE BID DESCRIPTION	QTY	UNITS	UNIT PRICE	TOTAL
26.1	SANITARY SEWER CLEANOUTS	12	Each		
26.2	SANITARY SEWER LATERALS	260	Feet		
27.1	POLYVINYL CHLORIDE SANITARY SEWER (8 INCH)	340	Feet		
27.2	SANITARY SEWER COMPRESSION COUPLING (8 INCH)	2	Each		
203.02	UNCLASSIFIED EXCAVATION AND DISPOSAL	1000	Cubic Yard		
203.06	SELECT FILL	960	Cubic Yard		
206.01	STRUCTURE EXCAVATION	20	Cubic Yard		
206.0201	TRENCH AND CULVERT EXCAVATION	1030	Cubic Yard		
207.20	GEOTEXTILE BEDDING	1550	Square Yard		
304.14	SUBBASE COURSE, TYPE 4	630	Cubic Yards		
402.098204	9.5 F2 TOP COURSE HMA, 80 SERIES COMPACTION	150	Ton		
402.198904	19 F9 BINDER COURSE HMA SERIES 80 COMPACTION	240	Ton		
407.0103	STRAIGHT TACK COAT	65	Gallon		
418.7603	ASPHALT PAVEMENT JOINT ADHESIVE	1450	Feet		
520.0900001	SAW CUTTING ASPHALT CONCRETE	135	Feet		
552.17	SHIELDS AND SHORING	16000	Squre Foot		
608.0101	CONCRETE SIDEWALKS AND DRIVEWAYS	80	Cubic Yard		
608.21	EMBEDDED DETECTABLE WARNING UNITS	10	Square Yard		
609.04	CAST-IN-PLACE CONCRETE CURB (AS DETAILED)	680	Feet		
610.1403	TOPSOIL- LAWNS	14	Cubic Yard		
610.15	PREPARATION OF SUBSOIL FOR TURF ESTABLISHMENT	70	Square Yard		
610.1602	TURF ESTABLISHMENT- LAWNS	70	Square Yard		
614.060204	TREE REMOVAL OVER 6 INCHES TO 12 INCHES DIAMETER BREASTHEIGHT - STUMPS GRUBBED	1	Each		
619.01	BASIC WORK ZONE TRAFFIC CONTROL	1	Lump Sum		
619.0101	BASIC WORK ZONE TRAFFIC CONTROL (DAILY OPERATIONS)	1	Lump Sum		
620.0802	BEDDING MATERIAL, TYPE 2	135	Cubic Yard		
625.01	SURVEY OPERATIONS	1	Lump Sum		
647.41	REMOVE AND STORE SIGN PANEL, SIGN PANEL ASSEMBLY - SIZE I (UNDER 30 SQUARE FEET)	13	Each		
655.05020010	FRAMES AND COVERS FOR SANITARY SEWER MANHOLES	1	Each		
655.1003	WELDED FRAME AND GRATE	2	Each		
655.16000011	REMOVE AND DISPOSE OF FRAME AND GRATES	3	Each		
663.0408	PLASTIC WATER PIPE (8 INCH)	140	Feet		
663.0412	PLASTIC WATER PIPE (12 INCH)	340	Feet		
663.0603	3/4" COPPER WATER SERVICE	160	Feet		
663.1008	VALVE AND VALVE BOX (8 INCH)	3	Each		
663.1012	VALVE AND VALVE BOX (12 INCH)	3	Each		
663.1301	HYDRANT ASSEMBLY	1	Each		
663.2001	IRON WATER MAIN FITTINGS 3" - 8"	500	Lbs.		
663.2002	IRON WATER MAIN FITTINGS 10" - 16"	1020	Lbs.		
663.40	DISCONNECT AND CAP EXISTING WATER MAIN	2	Each		
663.4106	REMOVE AND DISPOSE OF EXISTING WATER MAIN (6 INCH)	10	Feet		
663.42	REMOVE AND DISPOSE OF EXISTING WATER VALVE & VALVE BOX	5	Each		
663.43	REMOVE AND DISPOSE OF EXISTING HYDRANT	1	Each		

ITEMIZED PROPOSAL

Note: All Unit Prices and Totals Must be Written or Typed in Black Ink

Grand Avenue Reconstruction Phase 6 - Harrison Street to Baldwin Street - CDBG FFY 2022

ITEM NO.	BASE BID DESCRIPTION	QTY	UNITS	UNIT PRICE	TOTAL
664.40480006	PRECAST SANITARY SEWER MANHOLE (48 INCH DIA.)	8	Linear Feet		
680.520203	CONDUIT, 1 NPS FLEXIBLE LIQUID TIGHT STEEL	50	Linear Feet		
680.54	INDUCTANCE LOOP INSTALLATION	700	Linear Feet		
680.72	INDUCTANCE LOOP WIRE	1900	Linear Feet		
685.01	WHITE EPOXY REFLECTORIZED PAVEMENT STRIPES, 15 MILS	1200	Linear Feet		
685.02	YELLOW EPOXY REFLECTORIZED PAVEMENT STRIPES, 15 MILS	340	Linear Feet		
685.04	WHITE EPOXY REFLECTORIZED PAVEMENT SYMBOLS, 15 MILS	4	Each		
699.040001	MOBILIZATION	1	Lump Sum		
				GRAND TOTAL:	

Print Forms

NON-COLLUSIVE CERTIFICATION

In accordance with Section 103-d of the New York State General Municipal Law, by submission of this bid, each bidder and each person signing on behalf of any bidder certifies, and in any case of a joint bid, each party thereto certifies as to its own organization, under penalty of perjury, that to the best of knowledge and belief:

a. The prices in this bid have been arrived at independently, without collusion, consultation, communication or agreement for the purpose of restricting competition to any matter relating to such prices with any other bidder or with any competitor:

b. Unless otherwise required by law, the prices which have been quoted in this bid have not been knowingly disclosed by the other bidder, and will not knowingly be disclosed by the bidder prior to opening, directly or indirectly, or any other bidder or to any other competitor; and

c. No attempt has been made or will be made by the bidder to induce any other person, partnership or corporation to submit a bid for the purpose of restricting competition.

Name of Firm: _____

Signature: _____

Date: _____

PAGE INTENTIONALLY LEFT BLANK

The *00d_Instructions to Bidders* document is included in the *Bid Packet: Itemized Bid Form and Supplements*

and also in

Section 01 - Instructions to Bidders in this Project Manual

COMPANY INFO AND QUALIFICATIONS

All questions must be answered and the data given must be clear and comprehensive. If necessary, the questions may be answered on separate attached sheets. The bidder may submit any additional information (he/she) desires.

COMPANY NAME: _____

DATE OF INCORPORATION: _____ WHERE INCORPORATED: _____

COMPANY HEAD/TITLE: _____

ADDRESS: _____

CITY: _____ STATE: _____ ZIP: _____

PHONE: _____ FAX: _____

CONTACT FOR THE APPLIED BID: _____

CONTACT PHONE OR EXTENSION: _____ CONTACT EMAIL: _____

FEDERAL EMPLOYER ID #: _____ DUNN & BRADSTREET (DUNS) NUMBER: _____

(NOTE: If you do not have a DUNS number, you will need to apply for a number and provide it to the Town before the first payment can be processed.)

Would you like to be contacted for future bids? ☐ Yes ☐ No

Please list the types of projects your company would be interested in bidding on:

Years in Construction (under current name): _____

COMPANY INFO AND QUALIFICATIONS (cont.)

CONTRACTS ON HAND:	GROSS AMOUNT:	ESTIMATED COMPLETION DATE:

UNCOMPLETED WORK (IF ANY):	WHERE?	WHY?

DEFAULTED CONTRACTS (IF ANY):	WHERE?	WHY?

RECENT IMPORTANT CONTRACTS COMPLETED:	GROSS AMOUNT:	COMPLETION DATE:

MAJOR EQUIPMENT AVAILABLE FOR CONTRACT:

MOST RECENT EXPERIENCE SIMILAR TO THIS BID:

PRINCIPALS AND OFFICERS OF THE COMPANY:		
NAME:	BACKGROUND/EXPERIENCE:	TITLE:

BANK REFERENCE: _____

The undersigned hereby authorizes and requests any person, firm or corporation to furnish any information requested by the Town of Union or the Village in verification of the recitals comprising this Statement of Bidder's Qualifications. The undersigned will also, upon request, fill out a detailed financial statement and furnish any other information that may be required by the Town of Union.

Signature of Bidder: _____ Date: _____

COMPANY INFO AND QUALIFICATIONS

All questions must be answered and the data given must be clear and comprehensive. If necessary, the questions may be answered on separate attached sheets. The bidder may submit any additional information (he/she) desires.

COMPANY NAME: _____

DATE OF INCORPORATION: _____ WHERE INCORPORATED: _____

COMPANY HEAD/TITLE: _____

ADDRESS: _____

CITY: _____ STATE: _____ ZIP: _____

PHONE: _____ FAX: _____

CONTACT FOR THE APPLIED BID: _____

CONTACT PHONE OR EXTENSION: _____ CONTACT EMAIL: _____

FEDERAL EMPLOYER ID #: _____ DUNN & BRADSTREET (DUNS) NUMBER: _____

(NOTE: If you do not have a DUNS number, you will need to apply for a number and provide it to the Town before the first payment can be processed.)

Would you like to be contacted for future bids? ☐ Yes ☐ No

Please list the types of projects your company would be interested in bidding on:

Years in Construction (under current name): _____

COMPANY INFO AND QUALIFICATIONS (cont.)

CONTRACTS ON HAND:	GROSS AMOUNT:	ESTIMATED COMPLETION DATE:

UNCOMPLETED WORK (IF ANY):	WHERE?	WHY?

DEFAULTED CONTRACTS (IF ANY):	WHERE?	WHY?

RECENT IMPORTANT CONTRACTS COMPLETED:	GROSS AMOUNT:	COMPLETION DATE:

MAJOR EQUIPMENT AVAILABLE FOR CONTRACT:

MOST RECENT EXPERIENCE SIMILAR TO THIS BID:

PRINCIPALS AND OFFICERS OF THE COMPANY:		
NAME:	BACKGROUND/EXPERIENCE:	TITLE:

BANK REFERENCE: _____

The undersigned hereby authorizes and requests any person, firm or corporation to furnish any information requested by the Town of Union or the Village in verification of the recitals comprising this Statement of Bidder's Qualifications. The undersigned will also, upon request, fill out a detailed financial statement and furnish any other information that may be required by the Town of Union.

Signature of Bidder: _____ Date: _____

CERTIFICATION OF BIDDER REGARDING EQUAL EMPLOYMENT OPPORTUNITY

In accordance with Executive Order 11246 (30 C.F.12319) as amended by Executive Order 11275, and the implementing rules and regulations thereof, and orders of the Secretary of Labor, Certificate regarding Equal Employment Opportunity is required of the contractor or prospective contractor and their proposed subcontractors prior to the award of contractor or subcontracts.

CERTIFICATION OF CONTRACTOR

Contractor's Name: _____

1. Participation in previous contract or subcontract:

   a. Contractor has participated in previous contract or subcontract subject to the Equal Opportunity Clause. ☐ Yes ☐ No

   b. Compliance reports were required to be filed in connection with such contract or subcontract. ☐ Yes ☐ No

2. Dollar Amount of Bid: _____ 3. Anticipated Performance Period (in days) _____

4. Expected total number of employees who will perform the proposed work: _____

5. In the event of the Bidder's non-compliance with non-discrimination clauses of this contract or with any such rules, regulations, or orders, this contract may be canceled, terminated or suspended in whole or in part and the BIDDERS MAY be declared ineligible for further Government contracts in accordance with procedures, authorized in Executive Order 11246 of September 24, 1965, or by BIDDER rule, regulation or order of the Secretary of Labor, or as otherwise provided by law.

6. The BIDDER shall include the provisions of this paragraph entitled "EQUAL EMPLOYMENT OPPORTUNITY" unless exempted by rules, regulations or orders from the Secretary of Labor issued pursuant to Section 204 of Executive Order 11246 of September 24, 1965, so that such provisions will be binding upon each subcontractor or vendor. The BIDDER will take such action with respect to any subcontract or purchase order as the property owner may direct as a means of enforcing such provisions including sanctions for non-compliance, provided however, that in the event the BIDDER becomes involved in, or is threatened with,litigation with a subcontractor or vendor as a result of such direction by the property owner, the BIDDER may request the United States to enter into such litigation to protect the interests of the United States.

Remarks:

Certification - The information is true and complete to the best of my knowledge and belief:

Name and Title of Signer: _____

_____ Signature

_____ Date

THE MAKING OF A FALSE, FICTITIOUS, OR FRAUDULENT CERTIFICATION MAY RENDER THE MAKER SUBJECT TO PROSECUTION UNDER TITLE 18, U.S.C. 10.

CERTIFICATION OF LOBBYING

1. No Federal appropriated funds have been paid or will be paid, by or on behalf of the undersigned, to any persons for influencing or attempting to influence an officer or employee of any agency, a Member of Congress, or an officer or an employee of Congress, or employees of a Member of Congress, in connection with the awarding of any Federal grant, the making of any Federal loan, the entering into any cooperative agreement, and the extension, continuation, renewal, amendment, or modification of any Federal contract, grant loan, or cooperative agreement.

2. If any funds other than Federal appropriated funds have been paid or will be paid the person for influencing or attempting to influence on officer or employee of Congress in connection with this Federal contract, grant loan, or cooperative agreement, the undersigned shall complete and submit Standard Form LLL "Disclosure Form to Report Lobbying," in accordance with its instructions.

3. The undersigned shall require that the language of this certification be included in the award documents for all subawards at all tiers (including subcontracts, subgrants, and contracts under grants, loans, and cooperative agreements) and that all subrecipients shall certify and disclose accordingly.

4. This certification is a material representation of fact upon which reliance was placed when this transaction was made or entered into. Submission of this certification is a prerequisite for making or entering into this transaction imposed by Section 1352 Title 31, U.S. Code. Any person who fails to file the required certification shall be subject to a civil penalty of not less than $10,000 and not more than $100,000 for such failure.

The information above is true and complete to the best of my knowledge and belief.

Name and Title of Signer: _____

_____ Signature

_____ Date

TOWN OF UNION DEPARTMENT OF PLANNING
CERTIFICATION OF NON-DEBARMENT

COMPANY NAME:	
PRINCIPAL(S) NAME(S):	
COMPANY ADDRESS:	

I hereby certify by signature below that neither myself, nor any other company principals, are debarred, suspended, voluntarily excluded, or otherwise ineligible from participation in Federally Funded projects.

Name: _____ Title: _____

_____ _____
Signature Date

THE MAKING OF A FALSE, FICTITIOUS, OR FRAUDULENT CERTIFICATION MAY RENDER THE MAKER SUBJECT TO PROSECUTION UNDER TITLE 18, U.S.C. 10.

FAIR TRADE CERTIFICATION

I, _____ being a principal of _____

herein after known as the "Offeror" certify by signature below that:

1.) The Offeror has read and understands the Notice to Bidders entitled "Fair Trade Practice."

2.) The Offeror is not a contractor of a foreign country included on the list of countries that discriminate against U.S. firms as published by the U.S. Trade Representative (USTR);

3.) The Offeror has not or will not enter into any subcontract with a subcontractor or a foreign country included on the USTR list;

4.) The Offeror will not provide any product of a country included on the USTR list;

5.) An Offeror unable to certify in accordance with paragraphs 1, 2, 3, and 4 above shall submit with its offer a written explanation fully describing the reasons for its inability to make the certification; and

6.) The Offeror shall provide immediate written notice to the Contracting Officer if, at any time before the contract award, the Offeror learns that its certification was erroneous when submitted or has become erroneous by reason of changed circumstances.

Name: _____ Title: _____

_____ _____

Signature Date

THE MAKING OF A FALSE, FICTITIOUS, OR FRAUDULENT CERTIFICATION MAY RENDER THE MAKER SUBJECT TO PROSECUTION UNDER TITLE 18, U.S.C. 10.

PREVAILING WAGE CERTIFICATION	
PRINCIPAL NAME:	
PRINCIPAL TITLE:	
COMPANY NAME:	

I hereby certify by signature that I understand and will comply with the Federal Labor Standard Provisions and agree to pay the current Federal and State prevailing wage rates and agree to follow all appropriate labor regulations for work to be performed.

I also agree to submit Certified Payroll to the Town of Union in a timely manner as determined by the New York State Department of Labor.

For any questions regarding specific labor practices, please contact the Bureau of Public Works at:

State Office Bldg
44 Hawley St - Rm. 908
Binghamton, NY 13901
Tel. (607) 721-8005 / Fax (607) 721-8004

This project is funded in whole or in part with Federal Community Development Block Grant Funds.

_____
Signature

_____
Date

THE MAKING OF A FALSE, FICTITIOUS, OR FRAUDULENT CERTIFICATION MAY RENDER THE MAKER SUBJECT TO PROSECUTION UNDER TITLE 18, U.S.C. 10.

CONTRACTING OPPORTUNITIES FOR MINORITY AND WOMEN OWNED BUSINESSES

COMPANY NAME:	

PERIOD OF CONSTRUCTION: FROM: _____ MONTH/YEAR

TO: _____ MONTH/YEAR

IS YOUR COMPANY FEMALE OWNED? ☐ YES ☐ NO

RACE DESIGNATION OF BIDDER. PLEASE CHECK ALL APPROPRIATE BOXES:

- ☐ AMERICAN INDIAN/ALASKA NATIVE
- ☐ ASIAN
- ☐ BLACK/AFRICAN AMERICAN
- ☐ HAWAIIAN/PACIFIC ISLANDER
- ☐ WHITE

ETHNICITY OF BIDDER. PLEASE CHECK THE APPROPRIATE BOX:

- ☐ HISPANIC OR LATINO
- ☐ NOT HISPANIC OR LATINO

PRINCIPAL NAME, TITLE: _____ DATE: _____

SIGNATURE: _____

PRINCIPAL NAME, TITLE

AFFIRMATIVE ACTION PLAN

The objective of the Affirmative Action Plan of the above designated contractor to provide maximum job opportunities for minority residents in the Town of Union area and other areas in which the company is engaged in substantial work activity. The company will estimate the total number of minority and /or low-income persons it plans to employ in each job category and will develop and maintain a labor force by job categories, which reflects the minority and/or low-income residential labor force characteristic of the Town of Union, Broome County, New York. Furthermore, it is proposed that the company formulate a proportioned percentage of apprentices and/or trainees employed on each project. These objectives shall remain uniform throughout the year. It is further agreed that these objectives will not be met by transfers within the company for such transfers would violate the intent of the program.

To assist in implementation of this plan, the above organization has designated that:

_____ act as the company's Equal Employment Officer.

All managerial personnel of the above-designated contractor are aware of its Equal Opportunity Policy and its objectives. In addition, all employees in the organization have been given a verbal explanation of the policy. Special meetings for discussion of problems relative to the Affirmative Action procedures and its implementation are initiated as needed.

An estimate of peak manpower needs for the submitted project is as follows:

Equipment Operators _____

Truck Drivers _____

Laborers _____

Other _____

The above mentioned labor force will be drawn from employees currently working for the above designated contractor and no new hiring is anticipated for the above project.

At this time, the above-designated contractor does not have a minority deficiency, nor does it plan on hiring additional workers in the immediate future. However, should a deficiency develop or should there be a labor shortage, the following steps will be taken to insure Equal Employment Opportunity hiring.

(1) All job openings will be listed with the New York State Employment Service for inclusion in the job bank.

(2) All jobs will be listed in the local press, indicating all relevant details associated with the job.

(3) Notification will be sent to all local agencies concerned with Equal Employment Opportunity.

In the Implementation of the three items above, it will be made clear that _____ is an Equal Opportunity Employer.

_____

Executive Officer Signature

TOWN OF UNION DEPARTMENT OF PLANNING
OSHA REQUIREMENTS FOR CAPITAL PROJECTS

_____ , agrees to adhere to the guidelines of the Occupational Safety and Health Act, in particular Part 1926 of the Safety and Health Regulations, for construction of this project.

Date: _____ Name: _____

Title: _____

_____
Signature

IMPORTANT PLEASE READ

PURPOSE OF THE SECTION 3 PLAN

This plan exists in order to ensure that, to the greatest extent feasible, a good faith effort will be made to:

1.) Provide an opportunity for training and employment to low-moderate income residents of the project area.
2.) Provide businesses located in the project area with the opportunity to become sub-contractors and/or vendors.

In order to accomplish the above, *all* potential contractors must sign the Contractor's Compliance Form contained in this section. In addition, *all* potential contractors must complete the Contractor's Section 3 Plan. This plan indicates what actions, if any, are proposed for hiring project area residents and for sub-contracting with project area businesses. A list of organizations concerned with the employment of project area residents is included in this Section in order to assist you when filling out the Contractor's Section 3 Plan.

Also included in this Section is a Trainee Utilization Plan and a Skilled Employee Utilization Plan. The successful bidder must complete these two forms.

PLEASE NOTE: The Successful bidder is the one with the lowest responsible bid. Each bidder, however, must sign the Contractor's Compliance Form and complete the Contractor's Section 3 Plan.

STATEMENT OF COMPLIANCE

TRAINING, EMPLOYMENT, AND CONTRACTING OPPORTUNITIES FOR BUSINESSES AND LOWER INCOME PERSONS

A.) The project assisted under this agreement is subject to the requirements of Section 3 of the Housing and Urban Development Act of 1968, as amended, 12 U.S.C. 170lu. Section 3 requires that to the greatest extent feasible, opportunities for training and employment be given to lower income residents of the project area and contracts for work in connection with the project be awarded to business concerns which are located in, or owned in substantial part, by persons residing in the area of the project.

B.) Notwithstanding any other provision of this agreement, the Company shall carry out the provisions of said Section 3 and the regulations issued pursuant thereto by the Secretary set forth in 24 CFR Part 135 (Published in 38 Federal Register 29220, October 23, 1973), and all applicable rules and orders of the Secretary issued thereunder prior to the execution of this contract. The requirements of said regulations include, but are not limited to, development and implementation of an affirmative action plan for utilizing business concerns located within, or owned in substantial part by persons residing in the area of the project; the making of a good faith effort, as defined by the regulations, to provide training, employment, and business opportunities required by Section 3; and incorporation of the "Section 3 clause" specified by Section 135.20(b) of the regulations in all contracts for work in connection with the project. The Company certifies and agrees that it is under no contractual or other disability, which would prevent it from complying with these requirements.

C.) Compliance with the provisions of Section 3, the regulations set forth in 24 CFR Part 135, and all applicable rules and orders of the Secretary issued thereunder prior to approval by the Government of the application for this agreement shall be a condition of the Federal financial assistance provided to the project, binding upon the Company and assigns. Failure to fulfill these requirements shall subject the Company, its contractors and sub-contractors, its successors, and assigns to the sanctions specified by this agreement, and to such sanctions as are specified by 24 CFR 135.135.

CONTRACTOR'S INFORMATION	
FIRM NAME:	
ADDRESS:	
TELEPHONE NUMBER:	

(NYAO-EO:GEM/rcs 6-14-74)

CONTRACTOR'S SECTION 3 PLAN

FIRM NAME:	
ADDRESS:	
TELEPHONE NUMBER:	

EMPLOYMENT

A. DO YOU EXPECT TO HIRE ANY PROJECT AREA RESIDENTS? ☐ YES ☐ NO

B. IF YES, HOW MANY? TRAINEES: _____ SKILLED EMPLOYEES: _____ TOTAL: _____

C. WHAT ORGANIZATION(S), IF ANY FROM THE ATTACHED LIST DO YOU INTEND TO NOTIFY? _____

D. WHAT PUBLICATION(S) WILL YOU USE FOR EMPLOYMENT NOTICES? _____

SUB-CONTRACTORS

A. DO YOU EXPECT TO USE PROJECT AREA BUSINESSES AS SUB-CONTRACTORS OR VENDORS? ☐ YES ☐ NO

B. IF YES, HOW MANY? _____

C. WHAT BUSINESSES, IF ANY, FROM THE PROJECT AREA WILL YOU REQUEST BIDS FROM? _____

PLAN PREPARED BY: _____ DATE: _____

_____
SIGNATURE OF PREPARER

TRAINEE EMPLOYEE UTILIZATION PLAN	
FIRM NAME:	
ADDRESS:	
TELEPHONE NUMBER:	

TOTAL NUMBER OF TRAINEES TO BE UTILIZED ON THIS PROJECT	
WORK CATEGORY	NUMBER OF TRAINEES

TOTAL NUMBER OF TRAINEES CURRENTLY ON COMPANY'S PERMANENT WORK FORCE	
WORK CATEGORY	NUMBER OF TRAINEES

TOTAL NUMBER OF TRAINEES TO BE RECRUITED AND HIRED FROM THE PROJECT AREA	
WORK CATEGORY	NUMBER OF TRAINEES

PLAN PREPARED BY: _____ DATE: _____

_____
SIGNATURE OF PREPARER

SKILLED EMPLOYEE UTILIZATION PLAN

FIRM NAME:	
ADDRESS:	
TELEPHONE NUMBER:	

TOTAL NUMBER OF SKILLED EMPLOYEES TO BE UTILIZED ON THIS PROJECT

WORK CATEGORY	NUMBER OF SKILLED EMPLOYEES

TOTAL NUMBER OF SKILLED EMPLOYEES CURRENTLY ON COMPANY'S PERMANENT WORK FORCE

WORK CATEGORY	NUMBER OF SKILLED EMPLOYEES

TOTAL NUMBER OF SKILLED EMPLOYEES TO BE RECRUITED AND HIRED FROM THE PROJECT AREA

WORK CATEGORY	NUMBER OF SKILLED EMPLOYEES

PLAN PREPARED BY: _____ DATE: _____

_____
SIGNATURE OF PREPARER

ORGANIZATIONS CONCERNED WITH THE EMPLOYMENT OF PROJECT AREA LOW INCOME RESIDENTS

OPPORTUNITIES FOR BROOME
5 W. STATE STREET
BINGHAMTON, NEW YORK 13901
(607) 723-6493

NEW YORK STATE DEPARTMENT OF LABOR
BROOME-TIOGA WORKFORCE DEVELOPMENT BOARD
171 FRONT STREET
BINGHAMTON, NEW YORK 13905
(607) 778-6499

BROOME COUNTY URBAN LEAGUE
43-45 CARROLL STREET
BINGHAMTON, NEW YORK 13901
(607) 723-7303

NAACP BROOME-TIOGA BRANCH
P.O. BOX 741
BINGHAMTON, NY 13902
(607) 231-6488 OR (607) 777-2123

NEW YORK STATE DIVISION OF MINORITY
AND WOMEN'S BUSINESS DEVELOPMENT
(855) 373-4692
MWBEBUSINESSDEV@ESD.NY.GOV

SUBCONTRACTOR REQUIREMENTS

Any contractor awarded a Community Development project shall submit the names of subcontractors for Town approval at the time of the bid award or Preconstruction Conference.

No subcontractor can begin work on a Community Development project until the following requirements are met:

1. Attend a Preconstruction Conference with the Town of Union Planning Department representative to review the following:

    a. OSHA Regulations

    b. Prevailing Federal and State Wage Rates Requirements

    c. Certificate of Lobbying

    d. Equal Employment Opportunity

    e. Affirmative Action Plan

    f. Weekly Payroll Sheets

    g. Section 3 Compliance

    h. Contractor's Eligibility

A subcontractor cannot work on any Community Development project without written permission from the Town of Union Planning Department to the contractor.

Any subcontractor found working at a job site without meeting the above requirements shall be requested to leave the work site.

Name: _____ Title: _____

_____ _____

Signature Date

TIME OF THE ESSENCE CLAUSE

Bidders submitting proposals for this work hereby acknowledge the following:

Completion of all work on this project with the time specified is essential to the operations of the Town of Union and the Engineer. Therefore, work must be completed within the time specified. The circumstances where the contractor may have other work to be completed will not be considered as justification for not completing the project within the time specified, nor will it be justification for granting an extension to the time of completion or for waiving liquidated damages.

BIDDERS ARE REQUIRED TO ACKNOWLEDGE THIS SPECIAL NOTICE BY INCLUDING A SIGNED COPY WITHIN THEIR BID PROPOSAL.

Name: _____ Title: _____

_____ Date: _____

Signature

M/WBE UTILIZATION PLAN

INSTRUCTIONS: All bidders submitting responses to this procurement must complete this M/WBE Utilization Plan and submit it as part of their proposal. The plan must contain detailed description of the services to be provided by each Minority and/or Woman Owned Business Enterprise (M/WBE) identified by the bidder.

Bidder's Name

Address

City, State, Zip

Telephone/Email:

Federal ID No.:

DUNS No.:

Certified M/WBE	Classification (check all applicable)	Description of Work (Subcontracts/Supplies/Services)	Dollar Value of Subcontracts/Supplies/Services
NAME ADDRESS CITY, ST, ZIP PHONE/E-MAIL / FEDERAL ID No.	NYS ESD Certified MBE ☐ WBE ☐		
NAME ADDRESS CITY, ST, ZIP PHONE/E-MAIL / FEDERAL ID No.	NYS ESD Certified MBE ☐ WBE ☐		

PREPARED BY (Signature) _____ DATE

NAME AND TITLE OF PREPARER:

TELEPHONE/E-MAIL

DATE

SECTION 01 - INSTRUCTIONS TO BIDDERS

INSTRUCTIONS TO BIDDERS

1. USE OF SEPARATE BID FORMS

These Contract Documents include a complete set of bidding and Contract forms which are for the convenience of Bidders and are not to be detached from the Contract Documents or filled out, or executed. Separate copies of Bid forms are furnished for that purpose.

2. STATEMENT OF WORK

The Contractor shall furnish all supervision, labor, materials, machinery, tools, equipment, and services and complete work in an efficient and workmanlike manner.

3. INTERPRETATIONS OR ADDENDA

No oral interpretation will be made to any Bidder as to the meaning of the Contract Documents or any part thereof. Every request for such an interpretation shall be made in writing to the Owner. Any inquiry received prior to the date fixed for the opening of Bids will be given consideration. Every interpretation made to a Bidder will be in the form of an Addendum to the Contract Documents and when issued will be mailed to each person holding Contract Documents, but it shall be the Bidder's responsibility to make inquiry as to the Addenda issued. All such Addenda shall become part of the Contract Documents and all Bidders shall be bound by such Addenda, whether or not received by the Bidders.

Each bidder must inform himself fully of the conditions relating to the labor under which the work is now being or will be performed. Failure to do so will not relieve a successful Bidder of his obligations to furnish all material and labor necessary to carry out the provisions set forth in his Bid. Insofar as possible, the Contractor in the carrying out of his work, must employ such methods or means as will not cause any interruption or interference with the work of any other Contractor. The Contractor shall schedule his work in cooperation with other Contractors and their schedules so that efficient and coordinated progress of all work occurs.

4. INSPECTION OF SITE

It is understood and agreed that the Contractor has, by careful examination, satisfied himself as to the nature and location of the work, the conformation of the ground, the character, quality and quantity of the materials to be encountered, the character of equipment and facilities needed preliminary to and during the prosecution of the work, the general and local conditions, and all other matters which can in any way affect the work under this Contract, including unfavorable conditions that may be encountered in the work, whether apparent upon surface inspection or disclosed only in the process of progressing the work. The Owner makes no representation as to the soil conditions to be encountered. No verbal agreement or conversation with any officer, agent or employee of the Owner, either before or after the execution of this Contract, shall affect or modify any of the terms or obligations herein contained.

5. AGREEMENT

The agreement is only to be signed by the winning bidder. The winning bidder will be notified of the award and will be given a separate copy of the agreement to sign and return. Once returned town officials will inspect and sign the agreement upon which the notice to proceed will be given.

6. ALTERNATIVE BIDS

No alternative Bids will be considered unless specifically requested.

7. BIDS

a. All bids must be submitted on forms contained herein and shall be subject to all requirements of the Contract Documents including the INSTRUCTIONS TO BIDDERS. All Bids must be regular in every respect and no interlineations, excisions or special conditions shall be made or included in the Proposal Form by the Bidder.

b. Bid Documents including the Bid, the Bid Guaranty (if required), the Non-Collusion Affidavit and the Statement of Bidder's Qualifications (if requested) shall be enclosed in envelopes (outer and inner) both of which shall be sealed and clearly labeled with the project name, name of Bidder, and date and time of bid opening in order to guard against premature opening of the bid.

c. Any Bid on which there is an alteration of or departure from the Bid form hereto attached may be considered irregular and as such may be rejected as informal.

d. If the Contract is awarded it will be awarded to the Bidder on the basis of the Bid most favorable to the Owner. In most cases the Contract shall be awarded based upon the lowest bid. The Contract will require the completion of work according to the Contract Documents.

e. Each Bidder shall include in his Bid, in the appropriate spaces therefore, the estimated cost of performing the work including all items of overhead, and without credit for salvaged materials.

8. BID GUARANTY

a. The bid for each project shall be accompanied by a Bid Guaranty which shall not be less than five per cent (5%) of the total estimated cost of the work including all items of overhead. At the option of the Bidder, the guaranty may be a certified check, bank draft, or a Bid bond approved by the Town Clerk. No Bid will be considered unless it is accompanied by the required guaranty. Certified checks or bank drafts must be payable to the order of the Town of Union. Cash deposits will not be accepted. The Bid guaranty shall insure the execution of the Agreement and the furnishing of the surety bond or bonds by the successful Bidder, all as required by the Contract Documents.

b. Revised Bids submitted before the opening of Bids, whether forwarded by overnight or special delivery, if representing an increase in excess of two per cent (2%) of the original Bid, must have the Bid guaranty adjusted accordingly, otherwise the Bid will not be considered.

c. Certified checks or bank drafts, or the amount thereof, and Bid bonds, of unsuccessful Bidders will be returned as soon as practicable after the opening of Bids.

9. COLLUSIVE AGREEMENTS

a. Each bidder submitting a bid for any portion of the work contemplated by the documents on which bidding is based shall execute and attach thereto, an affidavit substantially in the form herein provided, to the effect that he has not colluded with any other person, firm, or corporation in regard to any bid submitted.

b. Before executing any subcontract, the successful bidder shall submit the name of any proposed subcontractor and an affidavit for prior approval.

10. STATEMENT OF BIDDER'S QUALIFICATIONS

Each Bidder shall upon request of the Owner submit on the form furnished for that purpose, a copy of which is included in the Contract Documents, a statement of the Bidder's qualifications, his construction experience, and his organization and equipment available for the work contemplated; and when specifically requested by the Owner, a detailed financial statement. The Owner shall have the right to take such steps as it deems necessary to determine the ability of the Bidder to perform his obligations under the Contract, and the Bidder shall furnish the Owner all such information and data for this purpose as he may request. The right is reserved to reject any Bid where an investigation of the available evidence or information does not satisfy the Owner that the Bidder is qualified to carry out properly the terms of the Contract.

11. CORRECTIONS

Erasures or other changes in the Bid must be explained or noted over the signature of the Bidder.

12. TIME FOR RECEIVING BIDS

a. Bids received prior to the time of opening will be securely kept unopened. The officer whose duty it is to open them will decide when the specified time has arrived, and no Bid received thereafter will be considered; except that when a Bid arrives by mail after the time fixed for opening, but before the reading of other bids is completed, and it is shown to the satisfaction of the Owner that the non-arrival on time was due solely to delay in the mails for which the Bidder was not responsible, such Bid will be received and considered.

b. Bidders are cautioned that, while telegraphic modifications of Bids may be received as provided above, such modifications, if not explicit and if in any sense subject to misinterpretation, shall make the Bid so modified or amended, subject to rejection.

13. OPENING OF BIDS

At the time and place fixed for the opening of Bids, the Owner will cause to be opened and publicly read aloud every Bid received within the time set for receiving Bids, irrespective of any irregularities therein. Bidders and other persons properly interested may be present, in person or by representative.

14. WITHDRAWAL OF BIDS

Bids may be withdrawn on written or telegraphic request dispatched by the Bidder in time for delivery in the normal course of business prior to the time fixed for opening; provided, that written confirmation or any telegraphic withdrawal over the signature of the Bidder is placed in the mail and postmarked prior to the time set for Bid. The Bid guaranty of any Bidder withdrawing his Bid in accordance with the foregoing conditions will be returned promptly.

15. AWARD OF CONTRACTS: REJECTION OF BIDS

a. The Contract will be awarded to the responsible Bidder complying with the conditions of the INVITATION FOR BIDS provided such Bid is reasonable and it is to the best interest of the Owner. The Owner, however, reserves the right to reject any and all Bids and to waive any informality in Bids received whenever such rejection or waiver is in its interest. The Bidder to whom the award is made will be notified at the earliest possible date.

b. The Owner reserves the right to consider unqualified to perform the Contract any Bidder who does not habitually perform with his own forces the major portions of his work.

c. The owner intends to award the contract within 30 days of the bid opening. Bidders have the right to withdraw their bids and receive the full amounts of their bid bonds if the owner does not award the bid within 30 days.

16. EXECUTION OF AGREEMENT; PERFORMANCE AND PAYMENT BOND

a. Subsequent to the award within ten days after the prescribed forms are presented for signature, the successful Bidder shall sign, notarize, and return three (3) copies of the Agreement to the Owner.

b. Having satisfied all conditions of award as set forth elsewhere in these documents, the successful Bidder shall, within the period specified in Paragraph "a" above, furnish a surety bond in a penal sum of not less than the amount of estimated cost of the work including all items of overhead, as set out in the accepted proposal as security for the faithful performance of the Contract, and for the payment of all persons, firms, or corporations to whom the Contractor may become legally indebted for labor, materials, tools, equipment, services of any nature, employed

or used by him performing the work. Such bond shall be in the same form as that included in the Contract Documents and shall bear the same date as, or date subsequent to, the date of the Agreement. The current power of attorney for the person who signs for any surety company shall be attached to such bond. This bond shall be signed by a guaranty or surety company approved by the Owner's attorney.

c. The failure of the successful Bidder to execute such Agreement and to supply the required bond or bonds within seven days after the prescribed form are presented for signature, or within such a period as the Owner may grant, based upon reasons, determined sufficient by the Owner, shall constitute a default, and the Owner may either award the Contract to the lowest responsible Bidder or re-advertise for Bids, and may charge against the Bidder the difference between the amount for which a Contract for the work is subsequently executed, irrespective of whether the amount thus due exceeds the amount of the Bid Bond. If a favorable Bid is received by re-advertising, the defaulting Bidder shall have no claim for a refund.

17. WAGES AND SALARIES

a. Attention of Bidders is particularly called to the requirements concerning the payment of not less than the prevailing wage and salary rates specified in the Contract Documents and the condition of employment with respect to certain categories and classifications of employees.

b. The rates of pay set forth under New York State Prevailing Wage are the minimum to be paid during the life of the Contract. It is, therefore, the responsibility of Bidders to inform themselves as to the local labor conditions such as the length of the work day and work week, overtime compensation, health and welfare contributions, labor supply and prospective changes or adjustment of rates.

18. SEXUAL HARASSMENT

By submission of this bid, each bidder and each person signing on behalf of any bidder certifies, and in the case of a joint bid, each party thereto certifies as to its own organization, under penalty of perjury, that the bidder has and has implemented a written policy addressing sexual harassment prevention in the workplace and provides annual sexual harassment prevention training to all its employees. Such policy shall, at minimum, meet the requirements of section two hundred one-g of the labor law.

19. EXEMPTIONS FROM SALES AND USE TAXES

The Municipality is exempt from paying State or local sales taxes on any materials, which it purchases. In computing their bids, Bidders shall not include the sales and compensating use taxes of the State of New York or County in the State of New York for any supplies or materials to be used by the Contractor for and on behalf of the Owner which are exempt from such taxes.

20. EQUAL EMPLOYMENT OPPORTUNITY

a. Attention of Bidders is particularly called to the requirement for ensuring that employees and applicants for employment are not discriminated against because of their race, creed, color, or natural origin.

b. Special attention is directed to the Affirmative Action requirements presented in this Contract, which shall apply, to the Contractor and any Subcontractor under the terms of this Contract. The Contractor will be required to make a good faith effort in awarding work to minority-owned and women owned business enterprises.

21. APPROXIMATE ESTIMATE OF QUANTITIES

The approximate estimates will be used as a basis in determining the lowest Bidder. They are based upon an approximate estimate of the quantities of work to be performed, stated with as much accuracy as is possible in advance and must be understood as being approximate only; and the Contractor must not, at any time, after the execution of this Contract, dispute the accuracy of the estimate, or make any claims whatever against the Owner, its agents, or representatives based upon their alleged accuracy, or claim any misunderstanding in regard to the nature of the conditions, or the amount of work to be done, or the quantities of materials to be furnished under this Contract.

22. PREPARATION OF PROPOSAL

The Bidder shall state in the space allotted for the same on the proposal the gross sum in the manner hereafter described for which he proposes to furnish all material, labor and plant necessary for the completion of the work set forth in the drawings and specifications, together with a unit price for each of the separate items as called for.

Such gross sum shall be the sum of the products obtained by multiplying the quantities shown in the approximate estimates by the respective unit prices bid.

The unit prices and gross sum bid shall be indicated in words and by figures. In the case that the words and figures do not agree, the written words shall govern and the figures shall be disregarded.

The Bidder shall note that this proposal includes a "Non-collusive Bidding Certificate". This form must be properly filled out and submitted with the sealed bid. No proposal will be considered unless accompanied by this certificate.

23. FEDERAL REQUIREMENTS

The Bidder shall also complete the following federal requirements as part of the Bidding Documents:

1. Certification of Lobbying
2. Certification of Non-Debarment
3. Fair Trade Certification
4. Prevailing Wage Certification
5. Contracting Opportunities for Minority and Women Owned Businesses
6. Section 3 Compliance
7. Affirmative Action Plan
8. OSHA Requirements
9. W-9 Request for Taxpayer Identification Number and Certification
10. MWBE Form

24. **OTHER REQUIREMENTS**

MANDATORY LAW CHANGE (Senate Bill S.6756 and Assembly Bill 9985)
On November 5, 2018, New York State Governor Andrew Cuomo signed Senate Bill S.6756 and Assembly Bill 9985 into Law with the intent to greatly reduce the number of excavation related accidents thereby providing greater public safety and protection. The amendment to NYS Code Rule 753 will require any municipality or operator that engages in excavation work to require its excavators to complete a training and education program from their local One Call Notification Center.

Excavators must be trained by May 4, 2019 in order to perform work in the Town of Union. A copy of the excavators training certificate shall be placed on file with the Department of Public Works BEFORE any work begins.

The prime contractor shall provide the following information: Name and business address of firm, federal identification number, certifications of personnel doing the work, and Certificate of Insurance meeting the Town of Union coverage limits. The Contractor shall complete the Certification regarding Equal Employment Opportunity.

Name of Firm: _____

Address of Firm: _____

_____

Federal Identification #: _____

DUNS #: _____

EXHIBIT A

ACORD™ CERTIFICATE OF LIABILITY INSURANCE

DATE (MM/DD/YYYY)

PRODUCER

THIS CERTIFICATE IS ISSUED AS A MATTER OF INFORMATION ONLY AND CONFERS NO RIGHTS UPON THE CERTIFICATE HOLDER. THIS CERTIFICATE DOES NOT AMEND, EXTEND OR ALTER THE COVERAGE AFFORDED BY THE POLICIES BELOW.

INSURED	INSURERS AFFORDING COVERAGE	NAIC #
	INSURER A:	
	INSURER B:	
	INSURER C:	
	INSURER D:	
	INSURER E:	

COVERAGES

THE POLICIES OF INSURANCE LISTED BELOW HAVE BEEN ISSUED TO THE INSURED NAMED ABOVE FOR THE POLICY PERIOD INDICATED. NOTWITHSTANDING ANY REQUIREMENT, TERM OR CONDITION OF ANY CONTRACT OR OTHER DOCUMENT WITH RESPECT TO WHICH THIS CERTIFICATE MAY BE ISSUED OR MAY PERTAIN, THE INSURANCE AFFORDED BY THE POLICIES DESCRIBED HEREIN IS SUBJECT TO ALL THE TERMS, EXCLUSIONS AND CONDITIONS OF SUCH POLICIES. AGGREGATE LIMITS SHOWN MAY HAVE BEEN REDUCED BY PAID CLAIMS.

INSR LTR	ADD'L INSRD	TYPE OF INSURANCE	POLICY NUMBER	POLICY EFFECTIVE DATE (MM/DD/YY)	POLICY EXPIRATION DATE (MM/DD/YY)	LIMITS	
		GENERAL LIABILITY				EACH OCCURRENCE	$ $1,000,000
		X COMMERCIAL GENERAL LIABILITY				DAMAGE TO RENTED PREMISES (Ea occurence)	$ $100,000
		CLAIMS MADE X OCCUR				MED EXP (Any one person)	$ $5,000
						PERSONAL & ADV INJURY	$ $1,000,000
						GENERAL AGGREGATE	$ $2,000,000
		GEN'L AGGREGATE LIMIT APPLIES PER:				PRODUCTS - COMP/OP AGG	$ $2,000,000
		POLICY PRO-JECT LOC					
		AUTOMOBILE LIABILITY				COMBINED SINGLE LIMIT (Ea accident)	$ $1,000,000
		ANY AUTO				BODILY INJURY (Per person)	$
		ALL OWNED AUTOS				BODILY INJURY (Per accident)	$
		SCHEDULED AUTOS				PROPERTY DAMAGE (Per accident)	$
		HIRED AUTOS					
		NON-OWNED AUTOS					
		GARAGE LIABILITY				AUTO ONLY - EA ACCIDENT	$
		ANY AUTO				OTHER THAN AUTO ONLY: EA ACC	$
						AGG	$
		EXCESS/UMBRELLA LIABILITY				EACH OCCURRENCE	$ $1,000,000
		OCCUR CLAIMS MADE				AGGREGATE	$
							$
		DEDUCTIBLE					$
		RETENTION $					$
		WORKERS COMPENSATION AND EMPLOYERS' LIABILITY				X WC STATU-TORY LIMITS / OTH-ER	
		ANY PROPRIETOR/PARTNER/EXECUTIVE OFFICER/MEMBER EXCLUDED?				E.L. EACH ACCIDENT	$
		If yes, describe under SPECIAL PROVISIONS below				E.L. DISEASE - EA EMPLOYEE	$
						E.L. DISEASE - POLICY LIMIT	$
		OTHER NYS Disability Benefits				Statutory Limits	

Sample

Sample

DESCRIPTION OF OPERATIONS / LOCATIONS / VEHICLES / EXCLUSIONS ADDED BY ENDORSEMENT / SPECIAL PROVISIONS

Additional Insured: Village of Endicott
1009 East Main Street
Endicott, NY 13760

Hulbert Engineering and Land Surveying, DPC
Centre Plaza, 53 Chenango Street, 8th Floor
Binghamton, New York 13901

A seperate Certificate of Insurance is required for each additionally insured.

CERTIFICATE HOLDER

Town Of Union
3111 East Main Street
Endwell, New York 13760-5990

CANCELLATION

SHOULD ANY OF THE ABOVE DESCRIBED POLICIES BE CANCELLED BEFORE THE EXPIRATION DATE THEREOF, THE ISSUING INSURER WILL ENDEAVOR TO MAIL _____ DAYS WRITTEN NOTICE TO THE CERTIFICATE HOLDER NAMED TO THE LEFT, BUT FAILURE TO DO SO SHALL IMPOSE NO OBLIGATION OR LIABILITY OF ANY KIND UPON THE INSURER, ITS AGENTS OR REPRESENTATIVES.

AUTHORIZED REPRESENTATIVE

© ACORD CORPORATION 1988

IMPORTANT

If the certificate holder is an ADDITIONAL INSURED, the policy(ies) must be endorsed. A statement on this certificate does not confer rights to the certificate holder in lieu of such endorsement(s).

If SUBROGATION IS WAIVED, subject to the terms and conditions of the policy, certain policies may require an endorsement. A statement on this certificate does not confer rights to the certificate holder in lieu of such endorsement(s).

DISCLAIMER

The Certificate of Insurance on the reverse side of this form does not constitute a contract between the issuing insurer(s), authorized representative or producer, and the certificate holder, nor does it affirmatively or negatively amend, extend or alter the coverage afforded by the policies listed thereon.

ARTICLE 11 INSURANCE AND BONDS

§ 11.1 Contractor's Liability Insurance

§ 11.1.1 The Contractor shall purchase from and maintain in a company or companies lawfully authorized to do business in the jurisdiction in which the Project is located such insurance as will protect the Contractor from claims set forth below which may arise out of or result from the Contractor's operations and completed operations under the Contract and for which the Contractor may be legally liable, whether such operations be by the Contractor or by a Subcontractor or by anyone directly or indirectly employed by any of them, or by anyone for whose acts any of them may be liable, including private entities performing Work at the site and exempt from the coverage on account of number of employees or occupation, which entities shall remain voluntary compensation coverage at the same limits specified for mandatory coverage for the duration of the Project, or persons or entities excluded by statue , but required by the Contract Documents to provide the insurance.

.1 Claims under workers' compensation, disability benefit and other similar employee benefit acts which are applicable to the Work to be performed;
.2 Claims for damages because of bodily injury, occupational sickness or disease, or death of the Contractor's employees;
.3 Claims for damages because of bodily injury, sickness or disease, or death of any person other than the Contractor's employees;
.4 Claims for damages insured by usual personal injury liability coverage;
.5 Claims for damages, other than to the Work itself, because of injury to or destruction of tangible property, including loss of use resulting therefrom;
.6 Claims for damages because of bodily injury, death of a person or property damage arising out of ownership, maintenance or use of a motor vehicle; and
.7 Claims for bodily injury or property damage arising out of completed operations; and
.8 Claims involving contractual liability insurance applicable to the Contractor's obligations under Section 3.18.

Insurance Requirements

Contractor agrees to procure and maintain the following insurance, as specified below, in full force and effect without interruption from date of commencement of the Work until final payment or completion of all warranty work performed after final payment, whichever occurs later, and to fully comply with all additional requirements and conditions set forth hereafter as follows:

a) The insurance required herein shall be submitted on the ACORD FORM 25-S Certificate of Insurance, and shall be written for not less than the following minimum amounts or greater if required by law, except that if Contractor procures any policy limits greater than the amounts required herein, then the higher limits shall apply as though stated and required herein. At the same time as the ACORD form is submitted, the Contractor must also submit valid proof of endorsements for additional insureds, and submit a waiver of subrogation.

Workers' Compensation and Employer's Liability Insurance	As required by statute. No exclusions for partners, proprietors or executive officers.
Comprehensive Automobile Liability (including owned, non-owned, leased and hired automobiles).	$1 million combined single limit for owned, hired and borrowed and non-owned motor vehicles.

Commercial General Liability:
(Insurance for liability due to personal injury, bodily injury or property damage sustained or alleged to have been sustained by any person):

a)	General Aggregate	$2,000,000
b)	Each Occurrence	$1,000,000
c)	Personal and Advertising Injury	$1,000,000
d)	Products and Completed Operations Aggregate	$2,000,000
e)	Fire Damage Legal Liability	$ 50,000
fl	Medical Expense	$ 5,000

Excess Liability $5,000,000
Each occurrence and aggregate.
On a "Follow Form basis"

Owner Contractor Protective Liability (OCP) $1,000,000 each occurrence
$2,000,000 aggregate
Owner as named insured

Certificate Holder:
Town of Union, -

b) The Commercial General Liability General Aggregate shall apply on a "per project" basis. There shall be no exclusions for explosion, collapse and underground operations ("XCU")

c) All required policies and coverages shall be written on an occurrence basis, as claims-made coverage is not acceptable.

d) Additional Insured coverage: The Comprehensive Automobile Liability policy, Commercial General Liability ("CGL") policy, and Excess Liability policy, specified above, shall each:

1. Include the Town of Union; Architects & Engineers, and _____ as additional insureds on a primary and non-contributory basis for the ___name of project_____.

   A) With respect to the Comprehensive Automobile Liability policy, ISO endorsement CA 20 48 02 99 shall be substituted in lieu of CG 20 10 11 85 or its approved equivalent, and

   B) With respect to the Excess Liability policy, additional insured status may be provided through a "follow-form" approved by the Owner and Architect, in lieu of CG 20 10 11 85 or its approved equivalent when the latter is not made available by the insurer, such that the required additional insured coverage will follow the form of the CGL policy and the Comprehensive Automobile Liability Policy; and

   C) The Additional Insured Endorsement or policy language granting the required Additional Insured status must be attached to the Certificate of Insurance.

2. Provide that such insurance is primary insurance with regard to the interests of the

additional insureds and that any other insurance maintained by the additional insureds is excess.

e) All insurance required herein must be with insurers licensed to conduct business in New York State and acceptable to the Owner. In addition, each insurance policy naming the Architect and the Owner as additional insured shall be a policy from an insurer with an A.M. Best "Secure" rating, meaning a rating from A- to AA*, or better.

f) Prior to commencing any work or any services required under this Agreement, Contractor shall provide certificates of insurance on approved form to the Owner and Architect, evidencing that Contractor has procured the insurance policies and coverages required herein. Each certificate of insurance must state that coverage will not be altered, canceled or allowed to expire without thirty (30) days prior written notice, by mail, to the Owner and Architect, except that the period of prior written notice shall be reduced from thirty (30) days to ten (10) days for any cancellation due to non-payment of premium. Whenever a policy of insurance names or is required to name the Owner and/or Architect as additional insureds, the certificate of insurance that the Contractor must provide for each such policy shall also include a copy of the required endorsement granting additional insured status.

g) The Contractor agrees to indemnify the Owner and Architect for all deductibles or self-insured retentions applicable to any insurance policy required herein to name them as additional insured.

h) The Contractor agrees that before it utilizes a Subcontractor to perform any part of the work or services required under this Agreement, Contractor will require each such Subcontractor to procure equivalent insurance coverages and limits for the protection of the Subcontractor, Owner and Architect, including but not limited to the additional insured coverage for Owner and Architect, described more fully above. Subcontractor and Contractor will both be equally responsible for providing the required evidence of insurance coverage to the Architect.

i) The Contractor acknowledges that failure to secure the above-specified insurance constitutes a material breach of this Agreement and subjects Contractor to liability for damages and all other legal remedies available to the Owner and/or Architect. Contractor further acknowledges that procurement of the insurance coverage and limits required herein shall not limit the extent of the Contractor's other responsibilities and liabilities specified within this Agreement or by law. Contractor authorizes Owner and/or Architect to withhold payments without interest, late fee or any other penalty accruing, until the latter has received current and acceptable certificates of insurance and endorsements evidencing insurance as required herein.

j) Contractor shall fully cooperate at all times with any effort by Owner or Architect to audit compliance with these insurance requirements, including but not limited to the Contractor authorizing Owner and/or Architect, in writing to obtain certified copies of the insurance policies procured or maintained by the Contractor in relation to this Agreement. Failure of the Contractor to provide any such required authorization within seven (7) business days of receiving a written request for same from the Owner, the Owner's Town Attorney, or the Architect, shall subject the Contractor to liquidated damages, payable solely to the Owner, in the amount of $1,000 per each calendar day thereafter that Contractor fails to comply with any such request.

k) **Owner's Protective Liability Insurance (OCP):** The Owner will require the Contractor to procure and maintain at Contractor's own expense until final completion of the work covered by the Contract, and any extensions thereof, Owner's and Contractor's Protective Liability Coverage

issued to and naming the Owner, Architect, and Construction Manager and covering the liability for damages imposed by law upon the Owner, Architect, and Construction Manager with respect to all operations under the agreement by the Contractors or its Subcontractors, including omissions and supervisory acts of the Owner, Architect, and Construction Manager. Such policy shall be delivered to the Owner, Architect, and Construction Manager no later than fifteen (15) days of awarding of the Contract.

I) **Asbestos/Lead Abatement Insurance:** If the Contractor's work on this project involves handling or disturbance of asbestos or other hazardous materials, the Contractor shall provide bodily injury and property damage liability insurance applicable to this hazard at limits of not less than the following:

If covered by this contractor's umbrella/excess policy:

General Aggregate	$1,000,000.00
Each Occurrence or Incident	$1,000,000.00

If NOT covered by this contractor's umbrella/excess policy:

General Aggregate	$6,000,000.00
Each Occurrence or Incident	$6,000,000.00

If written on a "Claims-Made" basis, and a retroactive date is used, the retroactive date must pre-date the execution of the contract.

If automobiles are to be used for transporting hazardous materials, the Contractor shall provide pollution liability broadened coverage (ISO endorsement CA 9948) as well as proof of MCS 90.

Workers' Compensation Requirements Under WCL §57:

To comply with coverage provisions of the Workers' Compensation Law, businesses must:

A) be legally exempt from obtaining workers' compensation insurance coverage; or
B) obtain such coverage from insurance carriers; or
C) be self-insured or participate in an authorized group self-insurance plan.

To assist State and municipal entities in enforcing Section 57 of the Workers' Compensation Law, businesses requesting permits or seeking to enter into contracts **MUST provide One** of the following forms to the government entity issuing the permit or entering into a contract:

A) WC/DB-100, Affidavit for New York Entities and any out of state entities with no employees, that New York State Workers' Compensation and/or disability benefits insurance coverage is not required; OR

WC/DB-101, Affidavit that an Out-of-State or foreign employer working in New York State does not require specific New York State Workers' Compensation and/or disability benefits insurance coverages; OR

(Affidavits must be stamped as received by the NYS Workers Compensation Board)

Forms WC/DB-100 and WC/DB-101 are available on the Board's website, www.wcb.state.ny.us, under the heading "Common Forms online." They may also be obtained by writing or visiting any District Office of the Workers' Compensation Board.

B) C-105.2 — Certificate of Workers' Compensation Insurance (the business' insurance carrier will send this form to the government entity upon request) **Please Note:** The State Insurance fund provides its own version of this form, the U-26.3; OR

C) SI-12 — Certificate of Workers' Compensation Self Insurance (the business calls the Board's Self-Insurance Office at 518-402-0247), or GSI-105.2 — Certificate of Participation in Workers' Compensation Group Self Insurance (the business' Group Self Insurance Administrator will send this form to the government entity upon request).

Disability Benefits Requirements under WCL §220 SUBD 8:

To comply with coverage provisions of the Disability Benefits Law, businesses may:

A) be legally exempt from obtaining disability benefits insurance coverage; or
B) obtain such coverage from insurance carriers; or
C) be self-insured.

Accordingly, to assist State and municipal entities in enforcing Section 220 Subd. 8 of the Disability Benefits Law, **businesses** requesting permits or seeking to enter into contracts **MUST provide One** of the following forms to the entity issuing the permit or entering into a contract:

A) WC/DB-100, Affidavit for New York Entities and any out of State entities with no employees, that New York State Workers' Compensation and/or Disability Benefits Insurance Coverage is not required; OR WC/DB-101, Affidavit that an Out-Of-State or Foreign Employer working in New York State does not require specific New York Workers' Compensation and/or Disability Benefits Insurance coverage; OR (Affidavits must be stamped as received by the NYS Workers' Compensation Board)
Forms WC/DB-100 and WC/DB-101 are available on the Board's website, www.wcb.state.ny.us, under the heading "Common Forms Online". They may also be obtained by writing or visiting any District Office of the Workers' Compensation Board.

B) Either the DB-120.1 — Certificate of Disability Benefits Insurance OR the DB-820/829 Certificate/Cancellation of Insurance (the business' insurance carrier will send one of these forms to the government entity upon request); OR

C) DB-155 — Certificate of Disability Benefits Self-Insurance (the business calls the Board's Self Insurance Office at 518-402-0247).

§ 11.1.2 The insurance required by Section 11.1.1 shall be written for not less than limits of liability specified in the Contract Documents or required by law, whichever coverage is greater. Coverages, whether written on an occurrence or claims-made basis, shall be maintained without interruption from the date of commencement of the Work until the date of final payment and termination of any coverage required to be maintained after final payment and, with respect to the Contractor's completed operations coverage, until the expiration of the period for correction of Work or for such other period for maintenance of completed operations coverage as specified in the Contract Documents.

§ 11.1.3 Certificates of insurance acceptable to the Owner shall be submitted to the Construction Manager for transmittal to the Owner with a copy to the Architect prior to commencement of the Work and thereafter upon renewal or replacement of each required policy of insurance. These certificates and the insurance policies required by this Section 11.1 shall contain a provision that coverages afforded under the policies will not be canceled or allowed to expire until at least 30 days' prior written notice has been given to the Owner. An additional certificate evidencing continuation of liability coverage, including coverage for completed operations, shall be submitted with

Init.

AIA Document A232TM — 2009(rev. 12/11) (formerly A201™CMa — 1992). Copyright © 1992 and 2009 by The American Institute of Architects. **All rights reserved.** WARNING: This AIA P Document is protected by U.S. Copyright Law and International Treaties. Unauthorized reproduction or distribution of this AIA© Document, or any portion of it, may result in severe civil and criminal penalties, and will be prosecuted to the maximum extent possible under the law. This document was produced by AIA software at 11:41:34 on 01/10/2017 under Order No.9842859422_1 which expires on 01/05/2018, and is not for resale.
User Notes: (846087787)

the final Application for Payment as required by Section 9.10.2 and thereafter upon renewal or replacement of such coverage until the expiration of the time required by Section 11.1.2. Information concerning reduction of coverage shall be furnished by the Contractor with reasonable promptness.

§ 11.1.4 The Contractor shall cause the commercial liability coverage required by the Contract Documents to include (l) the Construction Manager, the Construction Manager's consultants, the Owner, the Architect, and the Architect's consultants as additional insureds for claims caused in whole or in part by the Contractor's negligent acts or omissions during the Contractor's operations; and (2) the Owner as an additional insured for claims caused in whole or in part by the Contractor's negligent acts or omissions during the Contractor's completed operations.

§ 11.2 Owner's Liability Insurance

The Owner shall be responsible for purchasing and maintaining the Owner's usual liability insurance.

§ 11.3 Property Insurance

§ 11.3.1 The Owner has an existing Property Insurance policy, with a company lawfully authorized to do business in the jurisdiction in which the Project is located. Such property insurance will continue to be maintained throughout the course of construction., This insurance shall include interests of the Owner, the Contractor, Subcontractors and Sub-subcontractors in the Project.

§ 11.3.1.1 Property insurance is on a Special Form (ISO #CP 1030) or equivalent plus Ordinance or Law (ISO #CP 0405 & CP0010) policy form and shall include, without limitation, insurance against the perils of fire (with extended coverage) and physical loss or damage including, without duplication of coverage, theft, vandalism, malicious mischief, collapse, windstorm, falsework, testing and startup, temporary buildings and debris removal including demolition occasioned by enforcement of any applicable legal requirements, and shall cover reasonable compensation for the Architect's, Contractor's, and Construction Manager's services and expenses required as a result of such insured loss.

§ 11.3.1.2 If the property insurance requires deductibles, the Owner shall pay costs not covered because of such deductibles.

§ 11.3.1.3 The Contractor shall provide insurance coverage for portions of the Work stored off the site after written approval of the Owner at the value established in the approval, and also for portions of Work in transit

§ 11.3.1.4 Partial occupancy or use in accordance with Section 9.9 shall not commence until the insurance company or companies providing property insurance have consented to such partial occupancy or use by endorsement or otherwise. The Owner and the Contractor shall take reasonable steps to obtain consent of the insurance company or companies and shall, without mutual written consent, take no action with respect to partial occupancy or use that would cause cancellation, lapse or reduction of insurance.

§ 11.3.1.5 Insurance required by paragraph 11.3 is not intended to cover machinery, tools, or equipment owned or rented by the Contractor which are utilized in the performance of the work but not incorporated into the permanent improvements. The Contractor shall, at the Contractor's own expense, provide insurance coverage for owned or rented machinery, tools, or equipment.

§ 11.3.2 Boiler and Machinery Insurance. The Owner shall purchase and maintain boiler and machinery insurance required by the Contract Documents or by law, which shall specifically cover such insured objects during installation and until final acceptance by the Owner; this insurance shall include interests of the Owner, Construction Manager, Contractor, Subcontractors and Sub-subcontractors in the Work, and the Owner and Contractor shall be named insureds.

§ 11.3.3 Loss of Use Insurance. The Owner, at the Owner's option, may purchase and maintain such insurance as will insure the Owner against loss of use of the Owner's property due to fire or other hazards, however caused. The Owner waives all rights of action against the Contractor for loss of use of the Owner's property, including consequential losses due to fire or other hazards however caused.

§ 11.3.4 If the Contractor requests in writing that insurance for risks other than those described herein or other special causes of loss be included in the property insurance policy, the Owner shall, if possible, include such insurance, and the cost thereof shall be charged to the Contractor by appropriate Change Order.

AIA Document A232 ™ 2009(rev. 12/11) (formerly A201TmCMa — 1992). Copyright © 1992 and 2009 by The American Institute of Architects. **All rights reserved. WARNING:** This AIA® Document is protected by U.S. Copyright Law and International Treaties. Unauthorized reproduction or distribution of this AIA® Document, or any portion of it, may result in severe civil and criminal penalties, and will be prosecuted to the maximum extent possible under the law. This document was produced by AIA software at 11:41:34 on 01/10/2017 under Order No.9842859422_1 which expires on 01/05/2018, and is not for resale.
User Notes: (846087787)

§ 11.3.5 If during the Project construction period the Owner insures properties, real or personal or both, adjoining or adjacent to the site by property insurance under policies separate from those insuring the Project, or if after final payment property insurance is to be provided on the completed Project through a policy or policies other than those insuring the Project during the construction period, the Owner shall waive all rights in accordance with the terms of Section 11.3.7 for damages caused by fire or other causes of loss covered by this separate property insurance. All separate policies shall provide this waiver of subrogation by endorsement or otherwise.

§ 11.3.6 Before an exposure to loss may occur, the Owner shall file with the Contractor a copy of each policy that includes insurance coverages required by this Section 11.3. Each policy shall contain all generally applicable conditions, definitions, exclusions and endorsements related to this Project. Each policy shall contain a provision that the policy will not be canceled or allowed to expire, and that its limits will not be reduced, until at least 30 days' prior written notice has been given to the Contractor.

§ 11.3.7 Waivers of Subrogation. The Owner and Contractor waive all rights against (1) each other and any of their subcontractors, sub-subcontractors, agents and employees each of the other, and (2) the Construction Manager, Architect, Architect's consultants, separate contractors described in Article 6, if any, and any of their subcontractors, sub-subcontractors, agents and employees, for damages caused by fire or other causes of loss to the extent covered by property insurance obtained pursuant to this Section 11.3 or other property insurance applicable to the Work, except such rights as the Owner and Contractor may have to the proceeds of such insurance held by the Owner as fiduciary. The Owner or Contractor, as appropriate, shall require of the Construction Manager, Construction Manager's consultants, Architect, Architect's consultants, Owner's separate contractors described in Article 6, if any, and the subcontractors, sub-subcontractors, agents and employees of any of them, by appropriate agreements, written where legally required for validity, similar waivers each in favor of other parties enumerated herein. The policies shall provide such waivers of subrogation by endorsement or otherwise. A waiver of subrogation shall be effective as to a person or entity even though that person or entity would otherwise have a duty of indemnification, contractual or otherwise, did not pay the insurance premium directly or indirectly, and whether or not the person or entity had an insurable interest in the property damaged.

§ 11.3.8 A loss insured under the Owner's property insurance shall be adjusted by the Owner as fiduciary and made payable to the Owner as fiduciary for the insureds, as their interests may appear, subject to requirements of any applicable mortgagee clause and of Section 11.3.10. The Contractor shall pay Subcontractors their just shares of insurance proceeds received by the Contractor, and by appropriate agreements, written where legally required for validity, shall require Subcontractors to make payments to their Sub-subcontractors in similar manner.

§ 11.3.9 If required in writing by a party in interest, the Owner as fiduciary shall, upon occurrence of an insured loss, give bond for proper performance of the Owner's duties. The cost of required bonds shall be charged against proceeds received as fiduciary. The Owner shall deposit in a separate account proceeds so received, which the Owner shall distribute in accordance with such agreement as the parties in interest may reach, or as determined in accordance with the method of binding dispute resolution selected in the Agreement between the Owner and Contractor. If after such loss no other special agreement is made and unless the Owner terminates the Contract for convenience, replacement of damaged property shall be performed by the Contractor after notification of a Change in the Work in accordance with Article 7.

§ 11.3.10 The Owner as fiduciary shall have power to adjust and settle a loss with insurers unless one of the parties in interest shall object in writing within five days after occurrence of loss to the Owner's exercise of this power; if such objection is made, the dispute shall be resolved in the manner selected by the Owner and Contractor as the method of binding dispute resolution in the Agreement. If the Owner and Contractor have selected arbitration as the method of binding dispute resolution, the Owner as fiduciary shall make settlement with insurers or distribution of insurance proceeds in accordance with the direction of the arbitrators.

§ 11.4 Performance Bond and Payment Bond

§ 11.4.1 The Contractor shall furnish, in duplicate, bonds covering faithful performance of the Contract and payment of obligations arising thereunder. Bonds shall be obtained from a surety company satisfactory to the Owner, licensed to do business in the State of New York (where the project is located), listed in the latest issue of the U.S. Treasury Circular 570, and on the New York State Insurance Department's website listing insurers.

AIA Document A232 ™ 2009(rev. 12/11) (formerly A201"CMa — 1992). Copyright ©1992 and 2009 by The American Institute of Architects. **All rights reserved. WARNING:** This AIAg Document is protected by U.S. Copyright Law and International Treaties. Unauthorized reproduction or distribution of this AIA® Document, or any portion of it, may result in severe civil and criminal penalties, and will be prosecuted to the maximum extent possible under the law. This document was produced by AIA software at 11:41:34 on 01/10/2017 under Order No.9842859422_1 which expires on 01/05/2018, and is not for resale.
User Notes: (846087787)

New York State Workers' Compensation Board

Prove It to Move It Program

December, 2011

For questions, please

- Call (518) 486-6307, or
- Visit www.wcb.ny.gov , or
- e-mail:Certificates@wcb.ny.gov.

Prove It to Move It

A publication of the
New York State Workers' Compensation Board

Businesses and other parties applying for a government permit, license or contract must prove compliance with New York state workers' compensation and disability benefits requirements. This manual explains the forms and processes necessary to move those applications through the process, and to stay in compliance with the law.

This document is solely provided for informational purposes. Only the New York State Workers' Compensation Board is authorized to determine entitlement to benefits, based on its application of the law to the specific facts of a case.

SECTION 02 - GENERAL CONDITIONS PART I

GENERAL CONDITIONS
PART I

101. DEFINITIONS

Wherever used in any of the Contract Documents, the following meanings shall be given to the terms herein defined:

a. The term "Contract" means the Contract executed by the Town of Union and the Contractor, of which these GENERAL CONDITIONS, PARTS I through III, form a part.

b. The term "Owner" means the Town of Union which is authorized to undertake this Contract.

c. The term "Contractor" means the person, firm or corporation entering into the Contract with the Owner to perform the work.

d. The term "Project Area" means the Area specified on the Drawings within which the work is to be performed under this Agreement.

e. The term "Engineer" means the Engineer of the Owner, or anyone acting under him, duly authorized so to act.

f. The term "Contract Documents" means and shall include the following:

Executed Agreement, Addenda (if any), Invitation for Bids, Instructions to Bidders, Signed Copy of Bid, General Conditions, Part I through III, Special Conditions, Technical Specifications, and Drawings (as listed in the Schedule of Drawings).

g. The term "Drawings" means the plans included in the bid package.

h. The term "Technical Specifications" means that part of the Contract Documents which describes, outlines and stipulates the manner, methods and materials to be employed in the work.

i. The term "Addendum" or "Addenda" means any changes, revisions or clarifications of the Contract Documents which have been duly issued by the Owner to prospective Bidders prior to time of receiving bids.

102. SUPERINTENDENCE BY CONTRACTOR

a. Except where the Contractor is an individual and gives his personal superintendence to work, the Contractor shall have a competent superintendent, satisfactory to the Engineer on the work at all times during working hours with full authority to act for him. The Contractor shall also provide an adequate staff for the proper coordination and expediting of his work.

b. The Contractor shall not change superintendents on the job except for adequate cause.

c. The Contractor shall schedule the work, such schedule to be approved by the Engineer. The Contractor shall be responsible for all work executed by him under the Agreement.

103. SUBCONTRACTS

a. The Contractor shall not execute an agreement, with any subcontractor or permit any subcontractor to perform any work included in this Contract, until he has submitted a non-collusive affidavit from the subcontractor and has received written approval of such subcontractor from the Engineer.

b. No proposed subcontractor shall be disapproved by the Engineer except for cause.

c. The Contractor shall be fully responsible for the acts and omissions of his subcontractors, and of persons either directly or indirectly employed.

d. The Contractor shall cause appropriate provisions to be inserted in all subcontracts relative to the work to require compliance by each subcontractor with the applicable provisions of this Contract.

e. Nothing contained in this Contract shall create any contractual relationship between any subcontractor and the Owner.

104. OTHER CONTRACTS

The Owner may award, or may have awarded, other Contracts for additional work, and the Contractor shall cooperate fully with such other Contractors, by scheduling his own work with that to be performed under other Contracts as may be directed by the Engineer. The Contractor shall not commit or permit any act which will interfere with the performance of work by any other Contractor as scheduled.

105. PROGRESS SCHEDULE AND NOTICE TO PROCEED

a. Progress Schedule

The Contractor shall promptly submit to the Engineer, a carefully considered progress schedule showing the proposed dates of starting and of completing each of the major subdivisions of the work. The schedule shall also show percentage of completion on the first of each month and shall show that all work is to be completed within the Contract time.

b. Notice to Proceed

After execution of the agreement, a Notice to Proceed will be issued to the Contractor which shall fix the starting and completion dates therefore, in accordance with the Contract time established in the "SPECIAL CONDITIONS" contained herein.

106. PAYMENTS

1a. The Contractor shall periodically, in accordance with the terms of the contract, submit to the Owner a requisition for a progress payment for the work performed and/or materials furnished to the date of the requisition less any amount previously paid to the Contractor. The Owner shall in accordance with the terms of the Contract approve and promptly pay the requisition for the progress payment less an amount necessary to satisfy any claims, liens or judgments against the Contractor which have not been suitably discharged and less any retained amount as hereafter described. The Owner shall retain not more than five percentum of each progress payment to the Contractor except that the Owner may retain in excess of five percentum but not more than ten percentum of each progress payment to the Contractor provided that there are not requirements by the Owner for the Contractor to provide a performance bond and a labor and material bond both in the full amount of the Contract. The Owner shall pay, upon requisition from the Contractor, for materials pertinent to the project which have been delivered to the site or offsite by the Contractor and/or subcontractor and suitably stored and secured as required by the Owner and the Contractor provided, the Owner may limit such payment to materials in short and/or critical supply and materials specially fabricated for the project each as defined in the Contract. When the work or major portions thereof as contemplated by the terms of the Contract are substantially completed, the Contractor shall submit to the Owner a requisition for payment of the remaining amount of the Contract balance. Upon receipt of such requisition the Owner shall approve and promptly pay the remaining amount of the Contract balance less two times the value of any remaining items to be completed and an amount necessary to satisfy any claims, liens or judgments against the Contractor which have not been suitably discharged. As the remaining items of work are satisfactorily completed or corrected, the Owner shall promptly pay, upon receipt of a requisition, for these items less an amount necessary to satisfy any claims, liens or judgments against the Contractor which have not been suitably discharged. Any claims, liens and judgments referred to in this section shall pertain to the project and shall be filed in accordance with the terms of the applicable Contract and/or applicable laws.

1b. As long as any lawful or proper direction concerning the work or material given by the Owner or Engineer, or their representatives, shall remain uncomplied with, the Contractor shall not be entitled to have any estimate made for the purpose of payment, nor shall any estimate be rendered on account of work done or material furnished until such lawful or proper direction has been fully and satisfactorily complied with.

2. Payment by Contractors to Subcontractor. Within fifteen calendar days of the receipt of any payment from the Owner, the Contractor shall pay each of his subcontractors and materialmen the proceeds from the payment representing the value of the work performed and/or materials furnished by the subcontractor and/or materialmen as reflected in the payment from the Owner less an amount necessary to satisfy any claims, liens or judgements against the subcontractor or materialmen which have not been suitably discharged and less any retained amount as hereafter described. The Contractor shall retain not more than five percentum of each payment to the subcontractor and/or materialmen except that the Contractor may retain in excess of five percentum but not more than ten percentum of each payment to the subcontractor provided that prior to entering into a subcontract with the Contractor, the subcontractor is unable or unwilling to provide a performance bond and a labor and material bond both in the full amount of the subcontract at the request of the Contractor. However, the Contractor shall retain nothing from those payments representing proceeds owed the subcontractor and/or materialmen from the Owner's payments to the Contractor for the remaining amounts of the contract balance as

provided in subdivision one of this section. Within fifteen calendar days of the receipt of payment from the Contractor, the subcontractor and/or materialmen shall pay each of his subcontractors and materialmen in the same manner as the Contractor has paid the subcontractor. Nothing provided herein shall create any obligation on the part of the Owner or to see the payment of any moneys to any subcontractor or materialmen from any contractor nor shall anything provided herein serve to create any relationship in contract or otherwise, implied or expressed, between the subcontractor or materialman and the Owner.

3. In the event that the terms of payment on a public works project, as provided in this section, are preempted or superseded as a result of the provisions of any federal statute, regulation or rule applicable to the project, the terms of this section shall not apply.

4. Additional Requirements

a. After the final inspection and acceptance by the Engineer of all work under the Contract, the Contractor shall prepare his requisition for final payment and submit it to the Engineer for approval.

b. There shall be retained from the final payment or from any payments due the Contractor:

(1) All amounts which may be expended by the Owner for work done or materials furnished in carrying out any of the work done under the Contract which the Contractor has failed to do to the satisfaction of the Engineer.

(2) Any amount due the Owner under the section entitled "Liquidated Damages" under Special Conditions.

c. The Engineer shall require with the final payment or with any payments due the Contractor, a Contractor's Certificate and Release and/or receipts from any or all persons performing work and supplying materials or services to the Contractor or any subcontractor, if this is deemed necessary to protect the Owner's interest. The Contractor shall obtain warranties and guarantees required for specific products, equipment or systems, executed in duplicate by responsible sub-contractors, suppliers, and manufacturers, within ten (10) days after completion of the applicable item of work.

The Contractor shall also submit a set of marked, reproducible Record Drawings together with two (2) sets of black line prints of the reproducible drawings to the Owner. Submit documents with transmittal letter in duplicate, containing date, project title, Contractor’s name(s), address and telephone number, list of documents, and signature of Contractor.

d. The Engineer shall also require with the final payment, a Maintenance Bond for an amount of not less than 100% of the final Contract cost and for a duration of one year from the date of the final payment. Said bond shall insure that repairs are made to any parts of the work which are found to be faulty because of poor materials or workmanship, or for any other reason.

e. The acceptance by the Contractor for the final estimate shall be, and shall operate as, a release to the Owner from all claims and liabilities to the Contractor for anything done and furnished for, or relating to, the work, or for any act, neglect, fault or default of the Owner, or of any person relating to or affecting

the work.

107. CHANGES IN THE WORK

a. The Owner may make changes in the scope of the work required to be performed by the Contractor by making additions thereto, or by omitting work therefrom, without invalidating the Contract, and without relieving or releasing the Contractor from any of his obligations under the Contract or any guarantee given by him pursuant to the Contract provisions, and without affecting the validity of the guaranty bonds, and without relieving or releasing the surety or sureties of said bonds provided that the total net amount of the changes does not change the contract amount by more than 25%. All such work shall be executed under the terms of the original Contract unless it is expressly provided otherwise.

b. Except for the purpose of affording protection against any emergency endangering life or property, the Contractor shall make no change in the work, provided any extra or additional work, or supply additional labor, services or materials beyond that actually required for the execution of the Contract, unless in pursuance of a written order from the Engineer authorizing the change. No claim for an adjustment of the Contract Price will be valid unless so ordered.

c. If applicable unit prices are contained in the Agreement the Engineer shall order the Contractor to proceed with desired changes in the work, the value of such changes to be determined by the measured quantities involved and the applicable unit prices; provided that the net value of all changes does not increase or decrease the original total amount shown in the Agreement by more than twenty-five percent (25%).

d. If applicable unit prices <u>are not</u> contained in the Agreement or if the total net changes increase or decrease the total Contract Price more than twenty-five percent (25%) the Engineer shall before ordering the Contractor to proceed with desired changes, request an itemized proposal from him covering the work involved in the change after which the procedure shall be as follows:

(1) If the proposal is acceptable the Engineer will prepare the change order in accordance herewith for acceptance by the Contractor and

(2) If the proposal is not acceptable, and prompt agreement between the two parties cannot be reached, the Engineer may order the Contractor to proceed with the work on a cost-plus-limited basis. A cost-plus-limited basis is defined as the net cost of the Contractor's labor, materials and insurance plus fifteen percent (15%) of said net cost to cover overhead and profit, the total cost not to exceed a specified limit.

e. Each change order shall include in its final form:

(1) a detailed description of the change in the work;

(2) the Contractor's proposal (if any) or a confirmed copy thereof;

(3) a definite statement as to the resulting change in the Contract Price and/or time

and;

(4) the statement that all work involved in the change shall be performed in accordance with Contract requirements except as modified by the change order.

108. CLAIMS FOR EXTRA COST

a. If the Contractor claims that any instructions by Drawings or otherwise involve extra cost or extension of time, he shall, within ten days after the receipt of such instructions, and in any event before proceeding to execute the work, submit his protest thereto in writing to the Engineer, stating clearly and in detail the basis of his objections. No such claim will be considered unless so made.

b. Any discrepancies which may be discovered between actual conditions and those represented by the Drawings shall at once be reported to the Engineer and work shall not proceed, except at the Contractor's risk, until written instructions have been received by him from the Engineer.

c. If, on the basis of the available evidence, the Engineer determines that an adjustment of the Contract Price and/or time is justifiable, the procedure shall then be as provided for in section - CHANGES IN THE WORK under GENERAL CONDITIONS, PART I.

109. TERMINATION, DELAYS AND LIQUIDATED DAMAGES

a. Termination of Contract. If the Contractor refuses or fails to prosecute the work with such diligence as will insure its completion within the time specified in these Contract Documents plus any extension thereof as provided in these Contract Documents, the Engineer, by written notice to the Contractor, may terminate the Contractor's right to proceed with the work. Upon such termination, the Owner may take over the work and prosecute the same to completion, by contract or otherwise, and the Contractor and his sureties shall be liable to the Owner for any additional cost incurred by the Owner in its completion of the work and they shall also be liable to the Owner for liquidated damages for any delay in the completion of the work as provided below. If the Contractor's right to proceed is terminated, the Owner may take possession of and utilize in completing the work such materials, tools, equipment and plant as may be on the site of the work and necessary therefore.

b. The Owner reserves the right to utilize the services of the next lowest available and responsible Bidder if, in the opinion of the Owner, the work or any portion thereof has not progressed at a satisfactory rate, or if any portion of the work is being done in an unsatisfactory manner and the Owner does not wish to terminate the services of the original Contractor, the next lowest available and responsible Bidder shall then progress the remaining work as a supplement to the original Contractor at the direction of the Engineer.

c. Liquidated damages for inexcusable delays. When the work embraced in the Contract is not completed on or before the date stipulated in TIME FOR COMPLETION under SPECIAL CONDITIONS, then and in that event, the Contractor further expressly agrees that for each day this Contract shall remain uncompleted after the completion date, the Owner may deduct the sum of one-hundred dollars ($100.00) from the Contract Price hereinafter specified and retain said sum out of the Contract Price as payment to the Owner by the Contractor of the liquidated damages sustained by the aforesaid.

This sum of $100.00 shall be in addition to the moneys specified in Section 109 d. Provided, however, that if the completion of this Contract is delayed by the Owner, by general strikes, Act of God or casualty beyond the control of the Contractor, then and in such event, the Contractor may, at the time of such delay, if any, request of the Owner, in writing, additional time within which to complete the performance of this Contract, and that the time of completion of this Contract be extended for such additional time as shall be caused by such delay.

d. Engineering Charges. When the work embraced in the Contract is not completed on or before the date as stipulated in TIME FOR COMPLETION under SPECIAL CONDITIONS, engineering and construction review expenses incurred by the Owner upon the work, from the completion date fixed by the above, to the completion date of the work, will be charged to the Contractor. Engineering and construction review expenses will be computed at the rate of two-hundred fifty dollars ($250.00) per day per man for each and every man and day the Engineer needs to furnish engineering and construction review or both at the job site.

110. ASSIGNMENT OR NOVATION

In accordance with the provisions of Section 109 of the General Municipal Law, the Contractor is hereby prohibited from assigning, transferring, conveying, subletting or otherwise disposing of this Contract, or of his right, title, or interest therein, or his power to execute this Contract, without the previous consent in writing of the Owner.

111. DISPUTES

a. All disputes arising under this Contract or its interpretation whether involving law or fact or both, or extra work, and all claims for alleged breach of contract shall within (10) ten days of commencement of the dispute, be presented by the Contractor to the Engineer for decision. All papers pertaining to claims shall be filed in quadruplicate. Such notice need not detail the amount of the claim but shall state the facts surrounding the claim in sufficient detail to identify the claim together with its character and scope. In the meantime, the Contractor shall proceed with the work as directed. Any claim not presented within the time limit specified within this paragraph shall be deemed to have been waived, except that if the claim is of a continuing character and notice of the claim is not given within ten (10) days of its commencement, the claim will be considered only for a period commencing ten (10) days prior to the receipt by the Engineer of notice thereof.

b. The Contractor shall submit in detail his claim and his proof thereof. Each decision by the Owner will be in writing and will be mailed to the Contractor by registered mail, return receipt requested.

c. If the Contractor does not agree with any decision of the Owner, he shall in no case allow the dispute to delay the work but shall notify the Owner promptly that he is proceeding with the work under protest and he may then except the matter in question from the final release.

112. TECHNICAL SPECIFICATIONS AND DRAWINGS

Anything mentioned in the Technical Specifications and not shown on the Drawings, or shown on the Drawings and not mentioned in the Technical Specifications, shall be of like effect as if shown on or mentioned in both. In case of difference between Drawings and Technical Specifications, the Technical Specifications shall govern. In case of any discrepancy in Drawings or Technical Specifications, the matter shall be immediately submitted to the Engineer, without whose decision said discrepancy shall not be adjusted by the Contractor, save only at his own risk and expense.

113. REQUESTS FOR SUPPLEMENTARY INFORMATION

It shall be the responsibility of the Contractor to make timely requests of the Engineer for any additional information not already in his possession which should be furnished by the Engineer under the terms of this Contract, and which he will require in the planning and execution of the work. Such requests shall be submitted in writing from time to time as the need is approached, but each shall be filed in ample time to permit appropriate action to be taken by all parties involved so as to avoid delay. The Contractor shall be fully responsible for any delay in his work or of others arising from his failure to comply with the provisions of this Section.

114. PERMITS AND CODES

a. The Contractor shall give all notices required by and comply with, all applicable laws, ordinances and codes of the Municipality and of the State of New York. All work shall comply with all applicable ordinances, and codes including all written waivers. Before beginning the work, the Contractor shall examine the Drawings and Technical Specifications for compliance with applicable ordinances and codes, and shall immediately report any discrepancy to the Engineer. Where the requirements of the Drawings and the Technical Specifications fail to comply with such applicable ordinances or codes, the Engineer will adjust the contract by Change Order to conform to such ordinances or codes (unless waivers in writing covering the difference have been granted by the governing body or department) and make appropriate adjustment in the Contract Price. Should the Contractor fail to observe the foregoing provisions and do work at variance with any applicable ordinance or code including any written waivers (notwithstanding the fact that such methods are in compliance with the Technical Specifications) the Contractor shall correct the methods of doing such work without cost to the Owner but a change order will be issued to cover only the excess cost the Contractor would have been entitled to receive if the change had been made before the Contractor commenced work on the items involved.

b. The Contractor shall, at his own expense, secure and pay to the appropriate department of the Municipality the fees or charges for all permits for water, sidewalks, pavement cuts, and repaving of streets and sidewalks and all other permits necessary.

c. The Contractor shall comply with the applicable laws and ordinances governing the disposal of materials, debris, rubbish and trash on or off the Project Area, and shall commit no trespass on any public or private property in any operation due to or connected with the Project.

115. CARE OF WORK

a. The Contractor shall be responsible for all damages to person or property that occur as a result of his fault or negligence in connection with the prosecution of the work and shall be responsible for the proper care and protection of all work performed until completion and final acceptance, whether or not the same has been covered in whole or in part by payments made by the Owner.

b. In an emergency affecting the safety of life or property, on or adjoining the site, the Contractor shall act, either at his own discretion or as instructed by the Engineer, to prevent such threatened loss or injury. Any compensation claimed by the Contractor on account of such emergency work will be determined by the Engineer as provided in the section entitled, CHANGES IN THE WORK under GENERAL CONDITIONS, PART I.

c. The Contractor shall avoid damaging sidewalks, street, curbs, pavement, utilities or any other property (except that which is to be replaced or removed) either on or adjacent to the site. He shall repair, at his own expense and in a manner satisfactory to the Engineer, any damage thereto caused by his operations.

116. ACCIDENT PREVENTION

a. The Contractor shall exercise proper precaution at all times for the protection of persons and property and shall be responsible for all damages to persons or property, either on or off the site, which occur as a result of his fault or negligence in connection with the prosecution of the work. The safety provisions of applicable laws and buildings and construction codes shall be observed and the Contractor shall take or cause to be taken such additional safety and health measures as the Engineer may determine to be reasonably necessary. Machinery, equipment and all hazards shall be guarded in accordance with the safety provisions of the "Manual of Accident Prevention in Construction" published by the Associated General Contractors of America, Inc., to the extent that such provisions are not in conflict with applicable local laws.

b. The Contractor shall maintain an accurate record of all cases of death, occupational disease, and injury requiring medical attention or causing loss of time from work, arising out of and in the course of employment on work under the Contract. The Contractor shall promptly furnish the Engineer with reports concerning these matters.

c. The Contractor shall indemnify and save harmless the Owner, the Engineer, and each of their officers, agents or employees from any claims for damages resulting from personal injury and/or death suffered or alleged to have been suffered by any person as a result of any work conducted under this Contract.

117. SANITARY FACILITIES

The Contractor shall furnish, install and maintain ample sanitary facilities for the workmen. As the needs arise, a sufficient number of enclosed temporary toilets shall be conveniently placed as required by the sanitary codes of the Municipality and State Governments. Drinking water shall be provided from an approved source, so piped or transported as to keep it safe and fresh and served from single service containers or satisfactory types of sanitary drinking stands or fountains. All such facilities and services

shall be furnished in strict accordance with existing and governing health regulations.

118. USE OF PREMISES

a. The Contractor shall confine his equipment, storage of materials and operations to the limits prescribed by ordinances or permits, or as may be directed by the Engineer and shall not unreasonably encumber the Project Area.

b. The Contractor shall comply with all reasonable instructions of the Engineer and the ordinances and codes of the Municipality regarding signs, advertising, traffic, fires, explosives, danger signals, barricades, and fire prevention.

119. REMOVAL OF DEBRIS, CLEANING, ETC.

All rubbish and debris found on the Project Area at the start of the work as well as that resulting from the construction activities or deposited on the site by others during the duration of the Contract shall be removed and legally disposed of by the Contractor who shall keep the Project Area and public rights-of-way reasonably clear at all times. Upon completion of the work, the Contractor shall remove all temporary construction, equipment, trash and debris of all kinds leaving the entire Project Area in a neat condition.

120. REVIEW BY OWNER

The Owner, its authorized representatives and agents, shall at all times, have access to and be permitted to observe and review all work, materials, equipment, payrolls, personnel records, employment conditions, and other relevant data and records pertaining to this Contract, provided, however, that all instructions and approvals with respect to the work will be given to the Contractor only by the Owner through its authorized representatives or agents.

121. FINAL INSPECTION

When the work on the project is substantially completed, the Contractor shall notify the Engineer in writing that the work will be ready for final inspection on a definite date which shall be stated in such notice. The notice shall bear the signed concurrence of the representative of the Engineer having charge of inspection and shall be given at least ten (10) days prior to the date stated for final inspection. If the Engineer determined that the work on the project is as represented, it will make the arrangements necessary to have final inspection commenced on the date stated in such notice, or as soon thereafter as is practicable.

122. DEDUCTION FOR UNCORRECTED WORK

If the Engineer deems it not expedient to require the Contractor to correct work not done in accordance with the Contract Documents an equitable deduction from the Contract Price will be made by agreement between the Contractor and the Engineer, and subject to settlement, in case of dispute, as herein provided.

123. <u>INSURANCE</u>

The Contractor shall comply with insurance requirements of AIA Document A201, as set forth herein:

a. Contractor's Liability Insurance

(1) The Contractor shall purchase from and maintain in a company or company lawfully authorized to do business in the jurisdiction in which the Project is located such insurance as will protect the Contractor from claims set forth below which may arise out of or result from the Contractor's operations under the Contract and for which the Contractor may be legally liable, whether such operation be by the Contractor or by the Subcontractor or by anyone directly or indirectly employed by any of them, or by anyone for whose acts any of them may be liable:

- claims under workers' or workmen's compensation, disability benefits, or other similar employee benefits acts which are applicable to the Work to be performed;

- claims for damage because of bodily injury, occupational sickness or disease, or death of the Contractor's employees;
-
- claims for damages because of bodily injury, sickness or disease, or death of any person other than the Contractor's or Subcontractor's employees;

- claims for damages insured by usual personal injury liability coverage which are sustained (1) by a person as a result of an offense directly or indirectly related to the employment of such person by the Contractor, or (2) by another person;

- claims for damages, other than to the Work itself because of injury to or destruction of tangible property, including loss of use resulting therefrom;

- claims for damages because of bodily injury, death of a person or property damage arising out of ownership, maintenance or use of a motor vehicle; and
-
- claims involving contractual liability insurance applicable to the Contractor's obligation under Section 127a-h.

(2) The insurance required by Section 123a. (1) shall be written for not less than limits of liability specified in the Contract Documents or required by law, whichever coverage is greater. Coverages, whether written on an occurrence or claims-made basis, shall be maintained without interruption from date of commencements of the Work until the date of final payment and termination of any coverage required to be by maintained after final payment.

(3) Certificates of Insurance acceptable to the Owner shall be filed with the Owner prior to the commencement of work. These Certificates and the insurance policies required under this Section 121 shall contain a provision that coverages afforded under the policies shall not be canceled or allowed to expire until at least 30 days' prior written notice has been given to the Owner by certified mail. If any of the foregoing insurance coverages are required to remain in force after final payment and are reasonably

available, an additional certificate evidencing continuation of such coverage shall be submitted prior to the final payment under Section 121. Information concerning reduction of coverage shall be furnished by the contractor with reasonable promptness in accordance with the Contractor's information and belief.

b. Owner's Liability Insurance. The Owner shall be responsible for purchasing and maintaining the Owner's usual liability insurance. Optionally, the Owner's may purchase and maintain other insurance for self-protection against claims which may arise from operations under the Contract. The Contractor shall not responsible for purchasing and maintaining this optional Owner's liability insurance unless specifically required by the Contact Documents.

c. Property Insurance

(1) Unless otherwise provided, the Owner shall purchase and maintain, in a company or companies lawfully authorized to do business in the jurisdiction in which the Projects is located, property insurance in amount of the initial Contract Sum as well as subsequent modification thereto for the entire Work at the site on a replacement cost basis without voluntary deductibles. Such property insurance shall be maintained, unless otherwise proved in the Contract Documents or otherwise agreed in writing by all persons and entities who are beneficiaries of such insurance, until final payment has been made or until no person or entity other than the Owner has an insurable interest in the property required by this section, whichever is earlier. The insurance shall include interest of the Owner, the Contractor, Subcontractors, and Sub-subcontractors in the Work.

(2) Property insurance shall be on all-risk policy form and shall insure against the perils of fire and extended coverage and physical loss or damage including, without duplication of coverage, theft, vandalism, malicious mischief, collapse, false-work, temporary buildings and debris removal including demolition occasioned by enforcement of any applicable legal requirements, and shall cover reasonable compensation for Engineer's services and expenses required as a result of such insured loss. Coverage for other perils shall not be required unless otherwise provided in the Contract Documents.

(3) If the Owner does not intend to purchase such property insurance required by the Contract and with all of the coverages in the amount described above, the Owner shall so inform the Contractor in writing prior to commencement of the Work. The Contractor may then affect insurance which will protect the interests of the Contractor, Subcontractors, and Sub-subcontractors in the Work, and by appropriate Change in Work, the cost thereof shall be charged to the Owner. If the Contractor is damaged by the failure or neglect of the Owner to purchase or maintain insurance as described above, without so notifying the Contractor, then the Owner shall bear all reasonable costs properly attributable thereto.

(4) If the property insurance requires minimum deductibles and such deductibles are identified in the Contract Documents, the Contractor shall pay costs and covered because of such deductibles. If the Owner or insurer increases the required minimum deductibles above the amounts so identified or if the Owner elects to purchase this insurance with voluntary deductibles amounts, the Owner shall be responsible for payment of the additional costs not covered because of such increase or voluntary deductibles. If deductibles are not identified in the Contract Documents, the Owner pay costs not covered because of deductibles.

(5) Unless otherwise provided in the Contract Documents, this property insurance shall cover

portions of the Work stored off the site after written approval of the Owner at the value established in the approval, and also portions of the Work in transit.

(6) Boiler and Machinery Insurance. The Owner shall purchase and maintain boiler and machinery insurance required by the Contract Documents or by law, which shall specifically cover such insured objects during installation and until final acceptance by the Owner; this insurance shall include interests of the Owner, Contractor, Subcontractors, and Sub-subcontractors in the Work, and the Owner and Contractor shall be named insureds.

(7) Loss of use insurance. The Owner, at the Owner's option, may purchase and maintain such insurance as will insure the Owner against loss of use of the Owner's property due to fire other hazards, however caused. The Owner waives all rights of action against the Contractor for loss of use of the Owner's property, including consequential losses due to fire and other hazards however caused.

(8) If the Contractor requests in writing that insurance for risks other than those described therein or for special hazards be included in the property insurance policy, the Owner shall, if possible include such insurance, and the cost thereof shall be charged to the Contractor by appropriate Change Order.

(9) If during the Project Construction period the Owner insures properties, real or personal or both, adjoining to the site by property insurance under policies separate from those insuring the Project, or if after final payment property insurance is to be provided on the completed Project through a policy or policies other than those insuring the Project drawing the construction period, the Owner shall waive all rights in accordance with the terms of Section 123.c.(11) for damages caused by fire or other perils covered by this separate property insurance. All separate policies shall provide this waiver of subrogation by endorsement or otherwise.

(10) Before an exposure to loss may occur, the Owner shall file with the Contractor a copy of each policy that includes insurance coverages required by Section 123c. Each policy shall contain all generally applicable conditions, definitions, exclusions and endorsements related to this Project. Each policy shall contain a provision that the policy will not be canceled or allowed to expire until at least 30 days' written notice has been given to the Contractor.

(11) Waivers of Subrogation. The Owner and Contractor waive all rights against (1) each other and any of their subcontractors, sub-subcontractors, agents and employees, each of the other, and (2) the Engineer, Engineer's consultants, separate contractors described in Article 6, if any, and any of their subcontractors, sub-subcontractors, agents and employees, for damages caused by fire other perils to the extent covered by property insurance obtained pursuant to Section 123c. or other property insurance applicable to the Work, except such rights as they have to proceeds of such insurance held by the Owner as fiduciary. The Owner or Contractor, as appropriate, shall require of the Engineer, Engineer's consultants, separate contractors described in Article 6, if any and the subcontractors, sub-subcontractors, agents, and employees of any of them, by appropriate agreements, written where legally required for validity, similar waivers each in favor of other parties enumerated herein. The policies shall provide such waivers of subrogation by endorsement or otherwise. A waiver of subrogation shall be effective as to a person or entity even though the person or entity would otherwise have a duty of indemnification, contractual or otherwise, did not pay the insurance premium directly or indirectly, and

whether or not the person or entity had insurable interest in the property damaged.

(12) A loss insured under Owner's property insurance shall be adjusted by the Owner as fiduciary and made payable to the Owner as fiduciary for the insures, as their interests may appear, subject to requirements of any applicable mortgage clause and of Section 123.c.(14). The Contractor shall pay Subcontractors their just shares insurance proceeds received by the Contractor, and by appropriate agreements, written where legally required for validity, shall require Subcontractor to make payments to their Sub-subcontractors in similar manner.

(13) If required in writing by a party in interest, the Owner as fiduciary shall, upon occurrence of any insured loss, give bond for proper performance of the Owner's duties. The cost of required bonds shall be charged against proceeds received as fiduciary. The Owner shall deposit in a separate account proceeds so received, which the Owner shall distribute in accordance with such agreements as the parties in interest may reach, or in accordance with an arbitration award in which case the procedure shall be provided as Paragraph 4.5. If after such loss no other special agreement is made, replacement of damaged property shall be covered by appropriate Change Order.

(14) The Owner as fiduciary shall have power to adjust a settle a loss with insurers unless one of the parties in interest shall object in writing within five days after occurrence of loss to the Owner's exercise of this power, if such objection be made, arbitrators shall be chosen as provided in Paragraph 4.5. The Owner as fiduciary shall, in that case, make settlement with insurers in accordance with directions of such arbitrators. If distribution of insurance proceeds by arbitration is required, the arbitrators will direct such distribution.

10.1.4 To fullest extent permitted by law, the Owner shall indemnify and hold harmless the Contractor, Engineer, Engineer's consultants, and agents and employees of any of them from and against claims, damages losses and expenses, including but not limited to attorneys fees, arising out of or resulting from performance of the Work in the affected area if in fact the material is asbestos or polycholorinated biphenyl (PCB) and has not been rendered harmless, provided that such claim, damage, loss or expense is attributable to bodily injury, sickness, disease or death, or to injury to or destruction of tangible property (other than the Work itself) including loss of use resulting therefrom, but only to the extent caused whole or in part by negligent acts or missions of the Owner, anyone directly or indirectly employed by the Owner or anyone for whose acts the Owner may be liable, regardless of whether or not such claim, damage, loss or expense is caused in part by party indemnified hereunder. Such obligation shall not be construed to be negate, abridge, or reduce other rights or obligations of indemnity which would otherwise exist as to a party or person described in Subparagraph 101.4.

The limits and types of insurance shall be indicated in Exhibit A with samples of AIA Document G612, Part B and Certificate of Insurance.

In addition, the policies, shall contain the following provisions:

(1) The presence of the Owner's engineers or their representative on the site of the work shall not invalidate the policy or insurance.

(2) The policy shall not be invalidated by reason of any violation of any of the terms of any

policy issued to the Contractor.

All insurance required to be procured and maintained as foresaid must be procured from Insurance Companies approved by the Owner and authorized to do business in the State of New York.

If any item any of the above required insurance policies should be canceled, terminated or modified so that the insurance is not in effect as required above, then, if the Owner shall so direct the Contractor shall suspend performance of work covered in the Contract. If said work is so suspended, no extension of time shall be due on account thereof. If said work is not suspended then the Owner may at its operation, obtain insurance affording coverage equal to that above required the cost of such insurance to be payable by the Contractor to the Owner.

The Owner, at his own cost and expense, may procure and maintain such insurance as will, in its opinion, protect it and others from contingent liability for damages because of bodily injury, including death, and property damage which may arise from operations under this Contract.

Neither the procurement nor the maintenance of any type of insurance by the Owner or the Contractor shall in any way be construed or be deemed to limit, discharge, waive or release the Contractor from any of the obligations and risks imposed upon him by the Contract or to be a limitation on the nature or extent of such obligations and risks.

"The Contractor agrees to indemnify and save harmless the Owner, agents and employees, from and against all loss or expense (including costs and attorney's fees) by reason of liability imposed by law upon the Owner, for damages because of bodily injury, including death resulting there from, sustained by any person or persons or on account of damage to property, including loss of use thereof, whether caused by or contributed to by said Owner, its agents, employees, or others."

124. GENERAL GUARANTY

Neither the final certificates of payment nor any provision in the Contract Documents nor partial or entire use or occupancy of the premises by the Owner shall constitute an acceptance of work not done in accordance with the Contract or relieve the Contractor of liability in respect to any express warranties or responsibility for failure to comply with terms of Contract Documents. The Engineer will give notice of observed noncompliance with reasonable promptness.

125. RISK OF LOSS

The Owner assumes no responsibility for the conditions of the Project Area nor for its continuance in the condition existing at the time of issuance of the Invitation for Bids thereafter. No adjustment of Contract Price or allowance for any change in conditions which may occur after the Invitation for Bids has been issued, will be made.

126. LIVE UTILITIES AND OTHER PROPERTY

a. The Contractor shall assume all responsibility for damage attributable to him to any property upon, or passing through, the Project Area, but excluded from the work or not owned by the Owner, such as

utility lines, surface improvements, or like items.

b. If disconnections of underground utility services are required to be made in public thoroughfares, the Contractor shall comply with all local requirements and regulations respecting the barricading of streets, the removal and restoration of pavement, and other pertinent matters.

c. The Contractor shall develop and make all detail surveys necessary for construction, including slope stakes, batter boards, stakes for pile locations and other working points, lines and elevations. It will be the Contractor's responsibility to engage competent workmen to payout the details of the construction work. No separate payment will be made for this time of work, the cost of such work is to be included in the various unit prices of the lump sum price bid for the construction project. The Contractor shall have the responsibility to carefully preserve bench marks, reference points and stakes, and in the case of destruction thereof by the Contractor or resulting from his negligence, the Contractor shall be charged with the expense and damage resulting therefrom and shall be responsible for any mistakes that may be caused by the unnecessary loss or of such bench marks, references points and stakes.

127. RISKS ASSUMED BY THE CONTRACTOR

a. The Contractor solely assumes the following distinct and several risks whether they arise from acts or omissions, (whether negligent or not and whether supervisory or otherwise) of the Contractor, the Owner, the Engineer, or his consultants, and each of their officers, agents or employees, of third persons or from any other cause, including unforeseen obstacles and difficulties which may be encountered in the prosecution of the work covered by the Contract, whether such risks are within or beyond the control of the Contractor and whether such risks involve a legal duty, primary or otherwise, imposed upon the Owner, the Engineer or his consultants, except that the Contractor shall not be responsible for risks which arise from affirmative acts of the Owner, the Engineer or his consultants committed with intent to cause the loss, damage and injuries herein below set forth:

(1) The risk of loss or damage, direct or indirect, of whatever nature, to the work covered by the Contract or to any plant, equipment, tools, material or property furnished, used, installed or received by the Owner or by the Contractor or any subcontractor, materialman or workman or workmen performing services or furnishing materials for the work covered hereunder. In the event of such loss or damage, the Contractor shall forth with repair, replace and/or make good any such loss or damage without cost to the Owner.

(2) The risk of claims, just or unjust by third persons against the Contractor, the Owner, Engineer, or his consultants, and each of their officers, agents or employees, on account of bodily injury (including wrongful death) and property damage (direct or consequential), and loss or damage of any kind whatsoever arising or alleged to arise out of or as a result of the work covered by the Contract (whether actually caused by or resulting from the performance of the Contract) or out of or in connection with the Contractor's operations or presence at or in the vicinity of the construction site, whether such claims are made and whether such injury, damage and loss is sustained at any time both before and after the final acceptance by the Owner of all work covered by the Contract.

b. The Contractor shall indemnify and save harmless the Owner, Engineer and his consultants, and each

of their officers, agents or employees, against all claims described above and for all costs and expenses incurred by them in the defense, settlement or satisfaction thereof, including attorneys' fees and court costs. If so directed, the Contractor shall at his own expense, defend against such claims.

c. The Contractor's obligations under this Section 127 shall not be deemed waived, limited or discharged by the enumeration or procurement of any insurance for liability for damages.

d. Neither the final acceptance of the work to be performed hereunder, nor the making of any payment shall release the Contractor from his obligations under this Section 127. The enumeration elsewhere in the Contract of particular risks assumed by the Contractor or particular claims for which he is responsible shall not be deemed to limit the effect of the provisions of this Section 127 or to imply that he assumes or is responsible for only risks or claims of the type enumerated; and neither the enumeration in this Section 127 nor the enumeration elsewhere in the Contract of particular risks assumed by the Contractor or particular claims for which he is responsible shall be deemed to limit the risks which the Contractor would assume or the claims for which he would be responsible in the absence of such enumeration.

e. The obligations of the Contractor under this Section 127 shall not extend to the liability of the Engineer or his consultants, their officers, agents or employees for property damage or bodily injuries arising out of the rendering of or the failure to render professional services by such insured or indemnitee, including:

(1) the preparation or approval of maps, plans, opinions, reports, surveys, designs or specifications and

(2) supervisory, inspection or engineering services.

f. The obligations of the Contractor under this Section 127 shall not extend to the liability of the Owner, Engineer, their consultants, officers, agents ad employees for property damage or bodily injury arising out of the sole negligence of the indemnitee.

g. It is intended by this Section 127 that the Contractor's responsibility to indemnify the Owner, Engineer, his consultants and their officers, agents or employees, is in addition to all other obligations of the Contractor set forth in the Contract Documents and should this Section 127 be deemed inconsistent for any reason then this Section 127 will supersede in those instances.

h. No provision of this Contract which, directly or indirectly, imposes upon the Contractor the responsibility, in whole or in part, for preventing injury to person or damage to property, or which specified in whole or in part the means to be used by the Contractor to prevent such injury or damage or which imposes upon the Contractor directly or indirectly, the risk or loss or damage and/or liability for or the obligation to hold the Owner, the Engineer, his consultants, or their officers, agents and employees harmless as to such injury and damage, shall create or give to third parties, any claim or right of action against the Contractor, Owner, Engineer, his consultants or their officers, agents or employees beyond such as may legally exist irrespective of such provision or provisions.

128. RESPONSIBILITIES OF THE ENGINEER

The Engineer shall decide questions which may arise as to the quality and acceptability of materials furnished, work performed, rate of progress of work, interpretation of Drawings and Specifications and all questions as to the acceptable fulfillment of the Agreement on the part of the Contractor. The duties and responsibilities of the Engineer as set forth herein shall not be extended except through written consent of the Engineer and the Owner.

a. Observation of the Work: All materials and each part or detail of the work shall be subject at all times to observation by the Engineer and the Owner, and the Contractor will be held strictly to the intent of the Contract Documents in regard to the Contract. Observations may be made at the site or at the source of material supply, whether mill, plant or shop. The Engineer shall be allowed access to all parts of the work and shall be furnished with such information and assistance by the Contractor as is required to make his observations and construction review.

b. Acceptability of Work: The Engineer's decision as to the acceptability or adequacy of the work shall be final and binding upon the Contractor. The Contractor agrees to abide by the Engineer's decision relative to the performance of the work.

c. Engineer's Decisions: All claims of the Owner or the Contractor shall be presented to the Engineer for decision which shall be final.

d. Where a Shop Drawing or sample is required by the Specifications, no related Work shall be commenced until the submittal has been reviewed by the Engineer.

e. Engineer's review of Shop Drawings or samples shall not relieve Contractor from responsibility for any deviations from the Contract Documents unless Contractor has in writing called Engineer's attention to such deviation at the time of submission and Engineer has given written concurrence and approval to the specific deviation, nor shall any concurrence or approval by Engineer relieve Contractor from responsibility for errors or omissions in the Shop Drawings.

129. REJECTED WORK AND MATERIALS

Any defective work whether the result of poor workmanship, use of defective materials, damage through carelessness or any other cause shall be removed at the Contractor's expense within ten days after written notice is given by the Owner, and the work shall be re-executed by the Contractor. The fact that the Engineer may have previously overlooked such defective work shall not constitute an acceptance of any part of it.

130. CHARACTER OF WORKMEN

The Contractor shall at all times be responsible for the conduct and discipline of his employees and/or any Subcontractor or persons employed by Subcontractors. All workmen must have sufficient knowledge, skill and experience to perform properly the work assigned to them. Any foreman or workman employed by the Contractor or subcontractor who does not perform his work in a skillful manner or appears to be incompetent or to act in a disorderly or intemperate manner shall, at the written request of the Owner, be discharged immediately and shall not be employed again in any portion of the work without the approval of the Owner.

131. SHOP DRAWINGS

The Contractor shall provide six copies of all shop drawings, setting schedules and such other drawings as may be necessary for the prosecution of the work in the shop and in the field as required by the Drawings, Specifications or the Engineer's instructions. Deviations from the Drawings and Specifications shall be called to the attention of the Engineer at the time of the first submission of shop drawings and other drawings for consideration. The Engineer's review of any drawings shall not release the Contractor from responsibility for such deviations. Shop drawings shall be submitted according to a schedule prepared jointly by the Contractor and the Engineer.

a. Contractor's Certification: When submitted for the Engineer's review, shop drawings shall bear the Contractor's certification that he has reviewed, checked and approved the shop drawings, that they are in harmony with the requirements of the Project and with the provisions of the Contract Documents, and that he has verified all field measurements and construction criteria, materials, catalog numbers and similar data. Contractor shall also certify that the work represented by the shop drawings is recommended by the Contractor and the Contractor's guaranty will fully apply.

b. Engineer will review with reasonable promptness Shop Drawings and samples, but Engineer's review shall be only for conformance with the design concept of the Project and for compliance with the information given in the Contract Documents and shall not extend to means, methods, sequences, techniques or procedures of construction or to safety precautions or programs incident thereto. The review of a separate item as such will not indicate approval of the assembly in which the item functions. Contractor shall make any corrections required by Engineer and shall return the required number of corrected copies of Shop Drawings and resubmit new samples for review. Contractor shall direct specific attention in writing to revisions other than the corrections called for by Engineer on previous submittals. Contractor's stamp of approval on any Shop Drawing or sample shall constitute a representation to Owner and Engineer that Contractor has either determined and verified all quantities, dimensions, field construction criteria, materials, catalog numbers, and similar data or assumes full responsibility for doing so, and that Contractor has reviewed or coordinated each Shop Drawing or sample with the requirements of the Work and the Contract Documents.

132. EXEMPTION FROM SALES AND COMPENSATING USE TAXES OF THE STATE OF NEW YORK AND OF CITIES AND COUNTIES

Pursuant to Section 1115 of the Tax Law of the State of New York, and the interpretations by the various taxing agencies, the Contractor will be exempt from sales and use taxes for tangible personal property sold to a Contractor, subcontractor or representative for use in erecting a structure or building or for the maintaining, servicing or repairing real property, properties or land of an organization described in subdivision (a) of Section 1116 of Tax Law of the State of New York, as the terms real property, properties or land are defined in the Real Property Tax Law, provided, however, no exemption shall exist unless such tangible personal property is to become an integral component part of such structure, building or real property, properties or land.

It shall be the Contractor's responsibility to secure the State of New York Department of Taxation Form ST 120-1, Contractor's Exemption Purchase Certificate, and to comply with all instructions for this form or

any other requirements of the State of New York Department of Taxation prior to purchase of any material.

The above exemption does not, however, apply to tools, machinery, equipment or other property purchased by, leased by or to the Contractor or a subcontractor or to supplies or materials not incorporated into the completed Project. The Contractor and his subcontractors shall be responsible for and pay any and all applicable taxes, including sales and compensating use taxes, on such tools, machinery, equipment or other property or such unincorporated supplies and materials, and the provisions set forth below will not be applicable to such tools, machinery, equipment, property, supplies or materials.

133. O.S.H.A. REQUIREMENTS

It is the Contractor's responsibility to meet the minimum guidelines of the Occupational Safety and Health Act, in particular, Part 1926, the Safety and Health Regulations for construction. The Town of Union has the authority to issue a Stop Work Order if the applicable O.S.H.A. regulations are violated. The Stop Work Order will remain in effect until such violations of the O.S.H.A. regulations are violated. The Stop Work Order will remain in effect until such violations of the O.S.H.A. regulations have been rectified.

134. MUTCD REQUIREMENT

It is the Contractor's responsibility to meet the standards of the Manual on Uniform Traffic Control Devices (MUTCD), in particular, Part VI, the work zone traffic control standards. The Town of Union Safety Officer has the authority to issue a Stop Work Order if the applicable MUTCD standards are not met. The Stop Work Order will remain in effect until such standards have been satisfied.

SECTION 03 - GENERAL CONDITIONS PART II
FEDERAL LABOR STANDARD PROVISIONS

GENERAL CONDITIONS PART II
FEDERAL LABOR STANDARD PROVISIONS

201. MINIMUM WAGES

All laborers and mechanics employed or working upon the site of the work (or under the United States Housing Act of 1937 or under the Housing Act of 1949) will be paid unconditionally and not less often than once a week, and without subsequent deduction or rebate on any account (except payroll deductions as are permitted by regulations issued by the Secretary of Labor under the Copeland Act (29 CFR Part 3), (the full amount of wages and bona fide fringe benefits or cash equivalents thereof) due at the time of payment computed at rates not less than those contained in the wage determination of the Secretary of Labor which is attached hereto and made a part hereof, regardless of any contractual relationship which may be alleged to exist between the contractor and such laborers and mechanics.

202. FRINGE BENEFITS AS PART OF WAGES

Contributions made or costs reasonably anticipated for bona fide fringe benefits under Section 1(b)(2) of the Davis-Bacon Act on behalf of laborers or mechanics are considered wages paid to such laborers or mechanics, subject to 29 CFR 5.5(a)(1)(iv), also regular contributions made or costs incurred for more than a weekly period, are deemed to be constructively made or incurred during such weekly period.

203. FRINGE BENEFITS AS PART OF OVERTIME

The contractor or subcontractor must pay laborers and mechanics any fringe benefits for straight time and overtime: however, fringe benefits are not included when computing the overtime rate.

204. WORK DONE BY LABORERS

The contractors and subcontractors shall pay all employees the appropriate wage rate and fringe benefits on the wage determination for classification of the work actually performed, without regard to skill, except as provided in 29 CFR Part 5.5(a) (4). Laborers or mechanics performing work in more than one classification must be compensated at the rate specified for each classification for the time actually worked therein: Provided that the employer's payroll records accurately set forth the time spent in each classification in which work is performed.

205. WAGE DETERMINATION TO BE POSTED AT SITE

The wage determination including any additional classifications and wage rates shall be posted at all times by the contractor and its subcontractors at the site of the work in a prominent and accessible place where it can be easily seen by the workers.

206. ADDITIONAL CLASSIFICATIONS NEEDED

When the classification is not listed in the wage determination, the owner shall notify the Field Office Labor Relations in the U.S. Department of Housing and Urban Development in writing. The Field Office Labor Relations Staff will designate the appropriate classification with the wage rate and fringe benefits using the following guidelines. First, the work performed is not in the requested wage determination. Second, the classification is used within the area by the construction industry. Third, the proposed wage rate including any bona fide fringe benefits bears a reasonable relationship contained in the wage determination. The Field Office Labor Relations will submit a report to the Administrator of Wage and Hour Division, Employment Standards Administration, U.S. Department of Labor, Washington, D.C. 20210. The Administrator shall approve, modify, or disapprove every additional classification action the Field Office Labor Relations of U.S. Department of Housing and Urban Development within 30 days of receipt or within 30-day period that additional time is necessary.

207. DISPUTES BETWEEN CONTRACTOR AND CONTRACTING AGENCY

In the event the contractor, the laborers or mechanics to be employed in the classification or their representatives, and HUD or its designee do not agree on the proposed classification and wage rate (including the amount designated for fringe benefits, where appropriate), HUD or its designee shall refer the questions, including the views of all interested parties and the recommendation of HUD or its designee, to the Administrator for determination. The Administrator, or an authorized representative, will issue a determination within 30 days of receipt and so advise HUD or its designee or will notify HUD or its designee within the 30-day period that additional time is necessary.

208. THE WAGE RATE (including fringe benefits where appropriate)

Determined pursuant to the subparagraphs 1.6 and 1.7, shall be paid to all workers performing work in the classification under this contractor from the first day on which work is performed in the classification under this contract from the first day on which work is preformed in the classification.

209. FRINGE BENEFITS NOT DETERMINED FOR WORK CLASSIFICATION

Whenever the minimum wage rate for a specific work classification prescribed in the wage determination does not include a fringe benefit which is not expressed as any hourly rate, the contractor shall either pay the benefit as stated in the wage determination or shall pay another bona fide fringe benefit or an hourly cash equivalent thereof.

210. UNFUNDED PLANS AND PROGRAMS

If the contractor does not make payments to a trustee or other third party, the contractor may consider as part of the wages of any laborer or mechanic, the amount of any costs reasonably anticipated in providing bona fide fringe benefits under a plan or program. Provided that the Secretary of Labor has found, upon written request, by the contractor, that the applicable standards of the Davis-Bacon has been met. The Secretary of Labor may require the contractor to set aside in a separate account assets for the meeting of obligations under the plan or program.

211. WITHHOLDING

The Contractor and subcontractor are responsible for any unpaid wages to any employees covered by this contract. Upon its own action or upon written request from an authorized representative of the U. S. Department of Labor or New York State Department of Labor, the Owner can withhold or cause to be withheld any payment from the contractor under this contract or any other Federal contract with the same prime contractor, or any other Federal-assisted contract subject to Davis-Bacon prevailing wage requirements, which is held by the same prime contractor so much of the accrued payment or advances as may be considered necessary to pay laborers or mechanics, including apprentices, trainees, and helpers, employed by the contractor or subcontractor the full amount of wages required by the contract. In the event of failure to pay any laborers or mechanics, including any apprentice, trainee, or helper, employed or working on the site of the work (or under the United States Housing Act of 1937 or under the Housing Act of 1949 in the construction of or development of the project), all or part of the wages required by the contract, HUD, or its designee may, after written notice to the contractor, sponsor, applicant, or owner, such action as may be necessary to cause the suspension of any further payment, advance, or guarantee of funds until such violations have ceased. HUD or the Owner may, after written notice to the contractor, disburse such amounts withheld respective employees to whom they are due. The Comptroller General shall make such disbursements in the case of direct David-Bacon Act contracts.

212. PAYROLL SHEETS AND BASIC RECORDS

The contractor and any subcontractor shall maintain weekly payroll sheets (i.e. Federal Form WH-347) during the course of the work and preserved for three years thereafter for all laborers and mechanics working at the site (or under the Housing Act of 1949, in the construction or development of the project). The weekly payroll record shall include the name, address and social security number of each employee, his or her correct classification, hourly rates of wages (paid including rates of contributions or costs anticipated for bona fide fringe benefits or cash equivalents, daily and weekly number of hours worked, deductions made and actual wages paid as described under Section (1(b)(2)B of the Davis Bacon Act).

Whenever the Secretary of Labor has found under 29 CFR 5.5 (a)(1)(iv) that the wages of any laborer or mechanic include the amount of any cost reasonably anticipated in providing benefits under a plan or program described in Section 1(b) (2) of the David Bacon Act, the contractor shall maintain records which show that the commitment to provide such benefits is enforceable, that the plan or program is financially responsible and the plan or program has been communicated in writing to the laborers or mechanics affected, and records which show the costs anticipated or the actual cost incurred in providing such benefits. Contractors employing apprentices or trainees under approved programs shall maintain written evidence of the registration of apprenticeship and programs and certification of trainee programs, the registration of the apprentices and trainees, and the ratios and wage rates prescribed in the applicable programs.

213. PAYROLL RECORDS

The contractor shall submit weekly payroll sheets to the Owner in which each week any contract

work is performed. The prime contractor is responsible for the submission of copies and payrolls by all subcontractors. The weekly payroll sheets are due no later than the following Friday for the prior week's work. The payrolls submitted shall set out accurately and completely all of the information required to be maintained under 29 CFR Part 5.5(a)(3)(I). This information may be submitted in any form desired. Optional Form WH-347 is available for this purpose.

214. EACH PAYROLL MUST BE ACCOMPANIED BY A "STATEMENT OF COMPLIANCE"

The Statement of Compliance on the reverse side of Federal Form WH-347 satisfies the certification requirement that is required under Section 5.5(a) (3) (I) of the Regulations, 29 CFR Part 5. Each payroll sheet shall be signed and certified by the contractor or subcontractor or his or her agent who pays or supervises the payment of employee.

215. LABORER AND MECHANIC

Each laborer and mechanic (including each helper, apprentice, and trainee) employed on the contract during the payroll period has been paid the full weekly wages earned, without rebate, either directly or indirectly and that no deductions have been made either directly or indirectly from the full wage rates other than permissible deductions as set forth in 29 CFR Part 3.

216. FALSIFICATION

The falsification of any of the above certification may subject the contractor or subcontractor to civil or criminal prosecution under Section 1001 of Title 18 and Section 231 of Title 31 of the United States Code.

217. INSPECTION OF PAYROLL RECORDS

The contractor or subcontractor shall make any payroll records available for inspection, copying, or transcription by authorized representatives of U.S. Department of Housing and Urban Development, U.S. Department of Labor, and New York State Department of Labor. If the contractor and subcontractor fails to submit the required records or to make them available, U.S. Department of Housing and Urban Development or the owner may, after written notice to the contractor, sponsor, applicant, or owner, take such action as may be necessary to cause the suspension of any further payment, advance, or guarantee of funds. Furthermore, failure to submit the required records upon request or to make such records available may be found for debarment action pursuant to 29 CFR Part 5.12.

218. USE OF APPRENTICES AND TRAINEES

The contractor and subcontractor can employ apprentices or trainees. Apprentices and trainees will be permitted to work at less than the predetermined rate for the work performed when they are employed and individually registered in a bona fide apprenticeship program registered with the U.S. Department of Labor, Employment Training Administration, Bureau of Apprenticeship and Training, U.S. Department of Labor or with a State Apprenticeship Agency or if a person is employed in his or her first 90 days of probationary employment as an apprentice in such an apprenticeship program,

who is not individually registered in the program, but who has been certified by the Bureau of Apprenticeship and Training or State Apprenticeship Agency to be eligible for probationary employment as an apprentice. The allowable ratio of apprentices to journeymen on the job site or in any craft classification shall not be greater than the ratio permitted to the Contractor as to his entire work force under the registered program. In addition, any apprentice or trainee performing work on the job site in excess of the ration permitted under the registered program shall be paid not less than the applicable wage rate on the wage determination for the work actually performed. Where a contractor is performing construction on a project in a locality other than that in which its program is registered the ratios and wage rates (expressed in percentages of the journeyman's hourly rate) specified in the contractor's or subcontractor's registered program shall be observed. Each apprentice or trainee must be paid at not less than the rate specified in the registered program for the apprentice or trainee's level of progress, expressed as a percentage of the journeymen hourly rate specified in the applicable wage determination. The apprentice or trainee shall be paid fringe benefits in accordance with the provisions of the apprenticeship or trainee program. If the apprenticeship program does not specify fringe benefits, apprentices must be paid the full amount of fringe benefits listed on the wage determination for the applicable classification. If the Administrator determines that a different practice prevails for the applicable apprentice classification fringes shall be paid in accordance with that determination. The Contractor or subcontractor will be required to furnish written evidence of the registration of his program and apprentices, as well as of the appropriate ration and wage rates for the area of construction, prior to using apprentices or trainees on the contract work. Any worker listed on a payroll at an apprentice or trainee wage rate who is not registered or otherwise employed as stated shall be paid not less than applicable wage rate on the wage determination for the classification of work actually performed. In the event the Bureau of Apprenticeship and Training or a State Apprenticeship Agency recognized by the Bureau withdraws approval of a training program, the contractor will no longer be permitted to utilize trainees or apprentices at less than the applicable predetermined rate for the work performed until an acceptable program is approved.

219. EQUAL EMPLOYMENT OPPORTUNITY

The utilization of apprentices, trainees and journeymen under this part shall be in conformance with the equal employment opportunity requirements of Executive Order 11246, as amended and 29 CFR Part 30.

220. COMPLIANCE WITH COPELAND ACT REQUIREMENTS

The Contract shall comply with the requirements of 29 CFR Part 3 which are incorporated by reference in this contract.

221. SUBCONTRACTORS

The contractor or subcontractor will insert in any subcontract the clauses contained in 29 CFR 5.5(a)(1) through (10) and such other clauses as HUD or its designee may be appropriate instructions requires, and also a clause requiring the subcontractors to include these in any lower tier subcontracts.

222. CONTRACT TERMINATION: DEBARMENT

A breach of the contract clauses in 29 CFR 5.5 may be grounds for termination of the contract, for debarment as a contractor and a subcontractor as provided in 29 CFR 5.12.

223. COMPLIANCE WITH DAVIS BACON AND RELATED ACT REQUIREMENTS

All ruling and interpretation of the Davis Bacon and Related Acts contain din 29 CFR Parts 1, 3, and 5 are herein incorporated by reference in the contract.

224. DISPUTES CONCERNING LABOR STANDARDS

Disputes arising out of the labor standards provision of this contract shall be subject to the general disputes clause of this Contract. Such disputes shall not be resolved in accordance with the procedures of the U.S. Department of Labor set forth in 29 CFR Parts 5, 6, and 7. Disputes within the meaning of this clause include disputes between the contractor or any of its subcontractors and U. S Department of Housing and Urban Development and the Town of Union, U.S. Department of Labor or employees or their representatives.

225. CERTIFICATION OF ELIGIBILITY

225.1. By entering into this contract, the contractor certifies that neither it (nor he or she) nor any person or firm who has an interest in the contractor's firm is a person or firm ineligible to be awarded Government contracts by virtue of Section 3(a) of the David Bacon Act or 29 CFR 5.12(a)(1) or to be awarded HUD contracts or participate in HUD programs pursuant to 24 CFR Part 24.

225.2. No part of this contract shall be subcontracted to any person or firm ineligible for award of a Government contract by virtue of Section 3(a) of the Davis-Bacon Act or 29 CFR 12(a) (1) pursuant to 24 CFR Part 24.

225.3. The penalty for making false statements is prescribed in the U.S. Criminal Code, 18 U.S.C. 1001. Additionally, U.S. Criminal Code Section 1010, Title 18, U.S.C., "Federal Housing Administration transactions", provides in part, "Whoever, for the purpose of . . . influencing in any way the action of such Administration…makes, utters or publishes any statement knowing the same to be false, shall be fined not more than $5,000 or imprisoned not more than two years, or both."

226. COMPLAINTS, PROCEEDING OR TESTIMONY BY EMPLOYEES

No Laborer or mechanic to whom the wage or salary, or other labor standards provision of this contract are applicable shall be discharged or in any other manner discriminated against by the Contractor or any subcontractor because such employee has filed any complaint or instituted or caused to be instituted any proceedings or has testified or is about to testify in any proceeding under or relating to the labor standards applicable under this contract to his employer.

227. CONTRACT WORK HOURS AND SAFETY STANDARDS ACT

As used in the paragraph, the terms “laborers” and “mechanics” include watchmen and guards.

227.1. Overtime requirements. No contractor or subcontractor contracting for any part of the contract work which may require or involve the employment of laborers shall require or permit any such laborer in any workweek in which he or she is employed on such work to work in excess of eight hours in any calendar day or in excess of forty hours in such workweek unless such laborer or mechanic receives compensation at a rate not less than one and one-half times the basic rate of pay for all hours worked in excess of forty hours in such workweek unless such laborer or mechanic receives compensation at a rate not less than one and one-half times the basic rate of pay for all hours worked in excess of forty hours in such workweek, whichever is greater.

227.2. Violation: liability for unpaid wages. Liquidated damages. In the event of any violation of the clause set forth in the above paragraph, the contractor and any subcontractor is responsible for any unpaid wages. In addition such contractor and subcontractor is responsible for liquidated damages. Such liquidated damages shall be computed with respect to each individual laborer in the sum of $10.00 for each calendar day on which such individual was required or permitted to work in excess of eight hours or in excess of the standard workweek of forty hours without payment of the overtime wages required in the above paragraph 12.1.

227.3. Withholding for liquidated damages. The Owner shall upon its own action or upon written request of an authorized representative of the U.S. Department of Labor or New York State Department of Labor withhold or cause to be withheld any monies payable on account of work performed by the contractor or subcontractor under this contract or any other Federal contract with the same prime contractor such sums as may be determined to be necessary to satisfy any liabilities of such contractor or subcontractor for unpaid wages and liquidated damages as set forth in the paragraph 12.2.

227.4 Subcontracts. The contractor or subcontractor shall insert in any subcontracts the clauses set forth in paragraphs 12.1, 12.2 and 12.3 and also a clause requiring the subcontractors to include these paragraphs in any lower tier subcontracts. The prime contractor is responsible for the compliance of lower tier subcontractor with all the contract clauses in 29 CFR Part 5.5.

228. HEALTH AND SAFETY

228.1 No laborer or mechanic shall be required to work in surrounding or under working conditions which are unsanitary, hazardous, or dangerous to his health and safety as determined under construction safety and health standards.

228.2 The contractor shall comply with all regulations issued by the Secretary of Labor pursuant to Title 29 Part 1926 (formerly part 1518) and failure to comply may result in imposition of sanctions pursuant to the Contract Work Hours and Safety Standards Act (Public Law 91-54, 83 State. 96).

228.3 The Contractor shall include the provisions of this Article in every subcontract so that such provisions shall be binding on each subcontractor as the Secretary of Housing and Urban

Development or the Secretary of Labor shall direct as a means of enforcing such provisions.

228.4 Complaints by Employees. No contractor or subcontractor shall discharge or discriminate against any employee who has filed a complaint or initiated proceedings relating to the labor standards applicable under this contract.

SECTION 04 - GENERAL CONDITIONS PART III
NON-FEDERAL LABOR STANDARD PROVISIONS

GENERAL CONDITIONS PART III
NON-FEDERAL LABOR STANDARDS PROVISIONS

301. GENERAL PROVISIONS

The following Non-Federal Labor-Standard Provisions, including the following provisions concerning maximum hours of work, minimum rates of pay, and overtime compensation, with respect to the categories and classifications of employees hereinafter mentioned are included in this Contract pursuant to the requirements of applicable State and local laws. The limitations, if any, in these Non-Federal Labor Standards Provisions upon the hours per day, per work or per month which employees engaged on the work covered by this Contract may be required or permitted to work thereon shall not be exceeded.

302. OTHER STIPULATIONS

Labor Laws. The Contract shall be void and of no effect and the Owner shall not be liable to the Contractor, nor shall he receive any payment whatever from the Owner for any labor or materials furnished or for any work performed, unless he shall comply with the provisions of Section 3 and 14 of Article 2 of Chapter 31 of the Consolidated Laws of the State of New York and any act or acts amendatory or supplementary thereto. Each and every mechanic, workman, or laborer employed in the performance of the Contract, either by the Contractor, Subcontractor or any other person, with upon any materials to be used upon or in connection therewith, shall receive and be paid for legal day's work which shall not be less than the prevailing rate of wage for one day of work in the respective trades, callings, or occupations in which such mechanics, workmen and laborers so employed; that he will accept eight hours as a full day work, and that no laborer, workman or mechanic in the employee of the Contractor, Subcontractor, or any other person doing or contracting to do the whole or part of the work contemplated shall be permitted or required to work more than eight hours on any one calendar day, except in cases of extraordinary emergency caused by fire, flood, or danger to life and property.

303. MINIMUM WAGE RATES FOR LABORERS AND MECHANICS

All laborers and mechanics employed upon the work covered by this Contract shall be paid unconditionally and not less than once each week, and without subsequent deduction or rebate on any account (except such payroll deductions, as are made mandatory by law), the full amounts due at time of payment computed at wage rates not less than those contained in the age determination decision of said Secretary of Labor which is set forth below and made a part hereof, regardless of any contractual relationship which may be alleged to exist between the Contractor or any Subcontractor and such laborers and mechanics. All laborers and mechanics employed upon such work shall be paid cash, except that payment may be by check if the employer provides or secures satisfactory facilities approved by the Local Public Agency for the cashing of the same without cost of expense to the employee. The attached wage rates will be revised, if necessary, to agree with he rates as predetermined by the Secretary of Labor only insofar as that the predetermined rate may be higher than the prevailing rate in a certain area.

304. WORKMEN'S COMPENSATION

In accordance with the provisions of Section 108 of the General Municipal Law, this Contract shall be void and of no effect unless the Contractor shall secure compensation for the benefit of, and keep insured during the life of such Contract, such employees as are required to be insured under the provisions of the Workmen's Compensation Law, in compliance with the provisions of the Workmen's Compensation Law. The contractor shall comply with the relevant and applicable portions and provision of Article 9 of the Workmen's Compensation Law.

305. <u>ARTICLE 8, LABOR LAW</u>

The Contractor hereby agrees to comply with all of the relevant provisions of Article 8 of the Labor Law, to comply with and pay the applicable prevailing wages in accordance with the relevant wage determinations established by the Department of Labor, State of New York.

306. <u>NONDISCRIMINATORY PROVISIONS</u>

During the performance of this Contract, the Contractor agrees as follows:

a. The Contractor will not discriminate against any employee or applicant for employment because of race, creed, color or national origin, and will take affirmative action to ensure that they are afforded equal employment opportunities without discrimination because of race, creed, color or national origin. Such action shall be taken with reference, but not limited, to: recruitment, employment, job assignment, promotion, upgrading, demotion, transfer, layoff or termination, rates of pay or other forms of compensation, and selection for training or retraining, including apprenticeship and on-the-job training.

b. The Contractor will send to each labor union or representative of workers with which he has or is bound by a collective bargaining or other agreement or understanding, a notice, to be provided by the State Commission for Human Rights, advising such labor union or representative of the Contractor's agreement under clauses (a) through (h), hereinafter called "non-discrimination clauses", and requesting such labor union or representative to agree in writing, whether in such collective bargaining or other agreement or understanding or otherwise, that such labor union or representative will not discriminate against any member or applicant for membership because of race, creed, color or national origin, and will take affirmative action to ensure that they are afforded equal membership opportunities without discrimination because of race, creed, color, or national origin. Such action shall be taken with reference, but not limited, to: recruitment, employment, job assignment, promotion, upgrading, demotion, transfer, layoff or termination, rates of pay or other forms of compensation, and selection for training or retraining, including apprenticeship and on-the-job training. Such notice shall be given by the Contractor, and such written agreement shall be made by such labor union or representative, prior to the commencement of performance of this Contract. If such labor union or representative fails or refuses so to agree in writing, the Contractor shall promptly notify the State Commission for Human Rights of such failure or refusal.

c. The Contractor will post and keep posted in conspicuous places, available to employees and applicants for employment, notice to be provided by the State Commission for Human Rights setting

forth the substance of the provisions of clauses (a) and (b) and such provisions of the State's laws against discrimination as the State Commission for Human Rights shall determine.

d. The Contractor will state, in all solicitations or advertisements for employees placed by or on behalf of the Contractor, that all qualified applicants will be afforded equal employment opportunities without discrimination because of race, creed, color, or national origin.

e. The Contractor will comply with the provisions of Section 291-299 of the Executive law and the Civil Rights Law, will furnish all information and reports deemed necessary by the State Commission for Human Rights under these nondiscrimination clauses and such sections of the Executive law, and will permit access to his books, records and accounts by the State Commission for Human Rights, the Attorney General and Industrial Commissioner for the purposes of investigation to ascertain compliance with these nondiscrimination clauses and such sections of the Executive Law and Civil Rights Law.

f. This Contract may be forthwith canceled, terminated or suspended, in whole or in part, by the contracting agency upon the basis of a finding made in the State Commission for Human Rights that the Contractor has not complied with these nondiscrimination clauses, and the Contractor may be declared ineligible for future contracts made by or on behalf of the Owner until he satisfies the State Commission of Human Rights that he has established and is carrying out a program in conformity with the provisions of these nondiscrimination clauses. Such finding shall be made by the State Commission for Human Rights after conciliation efforts by the Commission have failed to achieve compliance with these nondiscrimination clauses and after a verified complaint has been filed with the Commission, notice thereof has been given to the Contractor and an opportunity has been afforded him to be heard publicly before three members of the Commission. Such sanctions may be imposed and remedies invoked independently of or in addition to sanctions and remedies otherwise provided by law.

g. If this Contract is canceled or terminated under clause (f), in addition to other rights of the Owner provided in this Contract, upon its breach by the Contractor, the Contractor will hold the Owner harmless against any additional expenses or costs incurred by the Owner in completing the work or in purchasing the services, materials, equipment or supplies contemplated by this Contract, and the Owner may withhold payments from the Contractor in an amount sufficient for this purpose and recourse may be had against the surety on the performance bond necessary.

h. The Contractor will include the provisions of clauses (a) through (g) in every subcontract or purchase order in such a manner that such provisions will be binding upon each subcontractor or vendor as to operations to be performed within the Project Area. The Contractor will take such action in enforcing such provisions of such subcontract or purchase order as the contracting agency may direct, including sanctions or remedies for noncompliance. If the Contractor becomes involved in or is threatened with litigation with a subcontractor or vendor as a result of such direction by the contracting agency, the Contractor shall promptly so notify the Owner's attorney, requesting him to intervene and protect the interests of the Owner.

SECTION 05 - SPECIAL CONDITIONS PART IV AND SPECIAL NOTES

SPECIAL CONDITIONS PART IV
AND SPECIAL NOTES

401. PROJECT AREA

The project is on Grand Avenue and begins on the east side of the intersection of Harrison Street at Station 25+15 and ends east of the intersection of Baldwin Street at Sta. 28+30.

402. TIME FOR COMPLETION

The work which the Contractor is required to perform under this Contract, shall be commenced at the time stipulated by the Owner in the "Notice to Proceed" to the Contractor and shall be fully completed July 25, 2023.

403. RESPONSIBILITIES OF CONTRACTOR

Except as otherwise specifically stated in the Contract Documents and Technical Specifications, the Contractor shall provide and pay for all materials, labor, tools, equipment, water, light, heat, power, transportation, superintendence, temporary construction of every nature, charges, levies, fees or other expenses incurred and all other services and facilities of every nature whatsoever necessary for his performance of the Contract within the specified time.

404. COMMUNICATIONS

a. All Notices, demands, requests, instructions, approvals, proposals and claims must be in writing.

b. Any notice to or demand upon the Contractor shall be sufficiently given, if delivered at the office of the Contractor stated on the signature page of the Agreement or at such other office as the Contractor may from time to time designate in writing to the Owner, or if deposited in the United States mail in a sealed, postage-prepaid envelope, or delivered with charges prepaid to any telegraph company for transmission, in each case addressed to such office.

c. All papers required to be delivered to the Owner shall, unless otherwise specified in writing to the Contractor, be delivered to the Planning Department of the Town of Union, 3111 East Main St., Endwell, New York, and any notice to or demand upon the Town of Union shall be sufficiently given if so delivered, or if deposited in the United States mail in a sealed, postage-prepaid envelope or delivered with charges prepared to any telegraph company for transmission to said Town of Union at such address, or to any other representatives of the Town of Union or to such other address as the Town of Union may subsequently specify in writing to the Contractor for such purpose.

d. Any such notice shall be deemed to have been as of the time of actual delivery of (in the case of mailing) when the same should have been received in due course of post, or in the case of telegrams, at the time of actual receipt, as the case may be.

405. WORK NOT INCLUDED IN CONTRACT

The following are not included in the Contract:

a. Work noted on the drawings or mentioned in the Technical Specifications, or both, as not being a part of the Contract.

406. CONTRACT DOCUMENTS AND DRAWINGS

The Owner will furnish the Contractor without charge two (2) copies of the Contract Documents including drawings. Additional copies requested by the Contractor will be furnished at cost.

407. EXISTING UTILITIES; UTILITY SERVICES

The plans show some pipes, conduits, cables or structures believed to exist in the working area. This information is shown for the Contractor's convenience and is neither exact not complete. The character, function, materials, sizes, locations, elevations, arrangements or connections of those subsurface structures may not be as shown. No attempt has been made to locate or show utility service connections. Obstructions other than those shown may be encountered. The Contractor shall understand that the Owner is not responsible for the correctness or sufficiency of the information given, that he shall have no claim for delay or extra compensation on account of incorrectness, insufficiency or absence of information regarding obstructions revealed by the drawings, and that he shall have no claim for relief from any obligation or responsibility under the Contract because the extent, location, size or character of any pipe, conduit, cable or other underground structure is incorrectly shown or has been omitted from the drawings.

The Contractor shall notify the electric power, gas, water, telephone, cable and sewer companies having buried utility service in the Project Area and file certificate of same with the Owner prior to beginning work.

The Contractor shall maintain service in main lines and service connections for all utilities encountered, regardless of the type of utility or the arrangements necessary to maintain service. Water lines and service connections exposed during cold weather shall be protected against freezing. Service connections may be cut only by permission of the owner of the utility, and a temporary connection shall be installed immediately.

The Contractor shall notify all utility customers before interrupting their service. A permanent, first-class replacement of the cutout portion of the original service connection shall be installed and inspected by the owner of the utility before backfilling.

The Contractor shall protect all utilities and subsurface structures encountered in the work. Because he may encounter some utilities and subsurface structures not shown on the plans, the Contractor shall proceed with caution in executing this work. Insofar as feasible, the Contractor shall not disturb existing utilities but shall support and sustain them. The Contractor shall repair all damage to any utilities including service connections encountered in the course of the work, regardless of character, function, condition, size, location, materials, construction, ownership, or interference with the alignment of any work to be built, whether such existing utilities, structures, or service connections are shown or not

shown.

The Contractor is held responsible for all damage to all utility or other underground or surface structures, whether or not they are shown on the Contract Drawings, and he shall pay all costs for protecting them or for repairing and/or replacing them if they are damaged.

408. CARE OF PUBLIC AND PRIVATE PROPERTY

The Contractor shall take all necessary precautions to prevent damage to structures above and below ground and to protect and preserve property within and adjacent to the work.

Special care shall be exercised to minimize injury to trees and any damaged branches shall be properly pruned and all wounds covered with approved tree paint. This repair work shall be done on a daily basis without exception. Roots may be cut and removed up to 25 percent of the estimated root area. Where more than 25 percent may be required, the Engineer shall decide whether the tree shall be removed. When it becomes absolutely necessary to remove a tree, it will be completely removed including stump.

409. TEMPORARY SERVICE

The Contractor shall notify concerned property owners at least forty-eight (48) hours in advance of his intention to open a trench, or for any reason whereby any public service might be interrupted. The Contractor shall again notify each property owner affected at least three hours in advance of his contemplated operation.

In the event that it is necessary to install temporary services, the Contractor shall cooperate fully with the utility company concerned. All work done in this regard for the convenience of the Contractor's operations shall be at his own expense.

410. MATERIAL

Unless otherwise indicated on the plans all material incorporated in the work shall be new and of the specified grade or better; it shall be neatly stored and protected, if necessary, until its incorporation in the work. Rejected material shall be immediately removed from the work.

When requested by the Engineer, the Contractor shall submit samples for laboratory inspection, or shall submit certificates from the Manufacturer that the material conforms to specifications.

411. CONSTRUCTION REVIEW

The Owner's representatives assigned to the Project for construction review shall have the authority to reject unsuitable material and to require the reinstallation of work improperly installed. These representatives do not have the authority to modify or relax any provisions of the plans. The acceptance of any work by the Engineer or his representatives during the course of construction is not in any way a final acceptance and does not relieve the Contractor of any responsibility for his work should any inferior workmanship or material become evident.

412. REFERENCE SPECIFICATIONS

When in these specifications reference is made to American Society of Testing Materials (ASTM), American National Standards Institute (ANSI), American Concrete Institute (ACI), American Institute of Steel Construction (AISC), American Iron and Steel Institute (AISI), American Welding Society (AWS), or Association of Official Agricultural Chemists (AOAC) specifications or standards, reference is made to the current edition of the noted specifications or standard revised to date of receipt of bids.

Reference specifications refer to the New York State Department of Transportation Specifications, latest edition, and are called herein simply, "State Specifications". Reference to items of the above specifications will include the materials specifications and construction methods, except as specifically modified herein.

413. PROPERTY IRONS

The Contractor shall replace, at his own expense, all property irons or monuments disturbed by his operations. The Contractor shall engage the services of a New York State licensed Land Surveyor to reset all property line monuments disturbed by his operations.

414. BLASTING

1. The Contractor specifically agrees, as required by the General Business Law, Section 322b, that:

a. The Contractor or his subcontractors shall not discharge explosives in the ground unless notice in writing be given 72 hours in advance to the person, corporation or municipality engaged in the distribution of combustible gas in such territory.

b. In connection with this discharge the Contractor must further ascertain if there are any gas lines, within a radius of 200 feet from the point of discharge, which are being maintained by a person, corporation or municipality other than the person, corporation or municipality servicing the territory. It there are, he must also give notice in writing 72 hours in advance to these parties.

c. After giving these notices, the work must be performed in such manner as to avoid damage to any pipe conveying combustible gas.

d. The Contractor shall not excavate in any existing street, highway or public place unless notice in writing shall have been given at least 72 hours in advance to the person, corporation or municipality engaged in the distribution of gas in such territory.

e. In any emergency, if excavation must be performed or explosive must be discharged in order to protect persons from immediate and substantial danger of death or serious injury, the 72-hour notice requirements of (a) and (b) are waived, provided notices are given before any such discharge is undertaken.

2. Rock Excavation - Blasting shall be done by persons skilled in such work. All blasts shall be properly covered and every precaution shall be taken to insure the safety of persons and property. The Contractor's attention is called to the requirements of Chapter 731, Laws 1953 concerning excavations

and discharge of explosives.

3. Storage of Explosives - Blasting powder, caps and other explosives shall be stored in accordance with the regulations of the State Department of Labor.

415. <u>ENVIRONMENTAL CONSERVATION</u>

No work shall be done before 7:00 a.m. or after 6:00 p.m., local time on a working day, on Sundays, or on legal holidays, except as necessary for the proper care and protection of work already performed, or during emergencies. The Contractor shall observe local ordinances regarding working hours.

The Contractor shall make every effort to minimize noise caused by his operations. Equipment shall be equipped with silencers or mufflers designed to operate with the least possible noise. The Contractor shall not permit the use of loud, abusive, obnoxious or profane language by his employees or by the employees of his subcontractors. The Contractor shall observe local ordinances regarding noise standards.

The Contractor shall minimize the introduction of noxious fumes into the air. Motor equipment shall be kept in repair and equipped with anti-pollution devices to cut down on exhaust emissions. The Contractor shall take active measures to control dust and air-borne debris resulting from his operations. Burning as a method of clearing or disposal will not be permitted.

The Contractor shall conduct his operations to minimize damage to natural watercourses, and shall not permit petroleum products or excessive amounts of silt, clay, or mud to enter any drainage system. The bed of natural watercourses shall be restored to normal gradient and cross section after being disturbed.

The Contractor shall not dispose of debris, refuse, or sanitary wastes in an open dump or in a natural watercourse, whether on public or private property, or in such places that undesirable wastes can eventually be exposed or carried to a natural watercourse.

The Contractor shall restrict his operations as nearly as possible to the immediate site. Unnecessary cutting of vegetation adjacent to the site is prohibited. Every effort shall be made to minimize erosion during and after construction and the site shall be returned to its original condition, except where improvements are indicated or required.

The Contractor shall not erect, or permit the erection of advertising signs. Only minimal identification and direction signs shall be permitted on the site. Unnecessary or obnoxious posters, pictures, signs, symbols, drawings or writing on work, material or equipment, resulting from vandalism or other causes, shall be covered or removed by the Contractor.

The Contractor shall take affirmative action to prevent the misuse of our natural environment, wasting of our natural resources, or destruction of natural values.

SPECIAL NOTES
EXEMPTION FROM SALES AND COMPENSATING USE TAXES OF THE STATE OF NEW YORK AND OF CITIES AND COUNTIES:

The Owner is exempt from payment of sales and compensating use taxes of the State of New York, and of cities, and counties, on all supplies and materials which are to become an integral component part of a structure, building, or real property, pursuant to this Contract. This exemption does not, however apply to tools, machinery, equipment, or other property purchased by, leased by or to the Contractor or a subcontractor or to supplies or materials not incorporated into the complete project. The Contractor and his subcontractors and compensating use taxes, on such tools, machinery, equipment, or other property or such unincorporated supplies and materials.

It shall be the Contractor's responsibility to comply with all requirements of the State of New York Department of Taxation prior to purchase of any supplies and materials.

SPECIAL NOTES
PROHIBITION OF USE OF LEAD-BASED PAINT AND ELIMINATION OF LEAD-BASED PAINT HAZARD:

The Contractor shall comply with the Lead-Based Paint Poisoning Prevention Act as reads below:

35.1 Purpose.

This Subpart A implements the provisions of 42 CFR Part 90, which are applicable to Federal agencies and which prohibit use of lead-based paint in residential structures constructed or rehabilitated by the Federal Government or with Federal assistance.

35.3 Definitions.

(a) "Lead-based paint", as defined in section 501(3), of the Lead-Based Paint Poisoning Prevention Act (84 Stat. 2080; 42 U.S.C. 4841 (3)), means any paint containing more than 1 percent lead by weight (calculated as lead metal) in the total nonvolatile content of liquid paints or in the dried film of paint already applied.

(b) "Applicable surfaces" means all interior surfaces and those exterior surfaces, such as stairs, decks, porches, railings, windows, and doors, which are readily accessible to children under 7 years of age (42 CFR 90.2 (g)).

(c) "Residential structure" means any house, apartment, or structure intended for human habitation, including any institutional structure where persons reside, such as an orphanage, boarding school dormitory, day care center or extended care facility (42 CFR 90.2(f)), and including nursing homes, intermediate care facilities, college housing, hospitals, group practice facilities, and community facilities.

(d) "Federally assisted construction or rehabilitation" means work financed with any form of Federal financial assistance, including grants, loans, advances, or proceeds of a HUD-guaranteed loan or a HUD - insured mortgage. For purposes of this part, "rehabilitation" and "rehabilitated" also include routine maintenance work which is financed by any of the foregoing forms of Federal financial assistance.

(e) "Health hazard" means cracking, scaling, peeling, and loose lead-based paint on applicable surfaces.

(f) "HUD-associated properties" means residential structures (as defined above when they are being constructed, purchased, leased, rehabilitated (as defined above), modernized, or improved, with any form of Federal financial assistance whether grant, loan, advance, or proceeds of a HUD-guaranteed loan or a HUD-insured mortgage.

35.5 Applicability.

(a) No office of the Department of Housing and Urban Development shall, in the construction or rehabilitation of any residential structure, use or permit the use of lead-based paint on applicable surfaces.

(b) The use of lead-based paint on applicable surfaces of any residential structure undergoing federally assisted construction or rehabilitation under any program under the jurisdiction of the Department of Housing and Urban Development is prohibited. Every Contract and Subcontract including painting, pursuant to which such federally assisted construction or rehabilitation is performed shall include appropriate provisions prohibiting such use of lead-based paint. Such provisions shall include any provisions necessary for the enforcement of that prohibition.

SPECIAL NOTES
NATIONAL HISTORIC PRESERVATION ACT OF 1966

The Contractor agrees to contribute to the preservation and enhancement of structures and objects of historical, architectural or archaeological significance when such items are found and/or unearthed during the course of project construction and to consult with the State Historic Preservation Officer for recovery of the items. (Reference: National Historic Preservation Act of 1966 (80 Stat 915, 16 USC 470) and Executive Order No. 11593 of May 31, 1971.)

SPECIAL NOTES
CLEAN AIR ACT AND FEDERAL WATER POLLUTION CONTROL ACT

The Clean Air Act, as amended (42 USC 1857) and Executive Order 11288; and the Federal Water Pollution Control Act, as amended (33 USC 1251); and all applicable standards, orders, and regulations issued pursuant thereto. The Grantee agrees to report all violations thereof to the Environmental Protection Agency and to HUD and specifically to comply with the following:

(1) For the purpose of this paragraph, the term "facility" means (a) any building, installation, structure, location or site or operations, (b) owned, leased, or supervised (c) by the Grantee or its Contractors and latter's subcontractors (d) for the construction, supply and service contracts entered into by the Grantee for the purpose of accomplishing this project.

(2) The Grantee agrees to comply with the Clean Air Act and the Federal Water Pollution Control Act during the accomplishment of this project and specifically agrees to the following:

(a) That any facility to be utilized in the accomplishment of this project is not listed on the Environmental Protection Agency's list of Violating Facilities pursuant to 40 CFR, Part 15.20;

(b) that in the event a facility utilized in the accomplishment of this project becomes listed on the EPA List, the Government may, inter alia, cancel, terminate for default, or suspend for such failure, in whole or in part, the Agreement;

(c) that it will comply with all other requirements of Section 114 of the Clean Air Act and Section 308 of the Federal Water Pollution Control Act, as amended, relating to inspection monitoring, entry, reports, and information, as well as all other requirements specified in Section 114 and Section 308, respectively, and all regulations and guidelines issued thereunder;

(d) that it will promptly notify the Government of the receipt of any notice from the Director, Office of Federal Activities, Environmental Protection Agency, indicating that any facility utilized or to be utilized in the accomplishment of this project is under consideration for listing on the EPA List of Violating Facilities; and

(e) that it will insert in any of its contracts and require insertion in subcontracts entered into for the purpose of accomplishing this project, unless otherwise exempted pursuant to the EPA regulations implementing the Clean Air Act and the Federal Water Pollution Control Act (CFR 40, Part 15.5e) provisions which shall include the criteria and requirements set forth in this paragraph, including this subparagraph (e).

RECORD MAINTENANCE

The Grantee shall establish, maintain and preserve, and require each of its contractors and subcontractors to establish, maintain and preserve property management, project performance, financial management payrolls and reporting documents and systems, and such other books, records and other data pertinent to the Project as the Government may require. While such records shall be retained for a period of three years following receipt of final payment by the Grantee, detailed exceptions are stated in 13 CFR 309.9.

SECTION 06 – LABOR STANDARDS

Labor standards compliance requirements for self-employed laborers and mechanics (aka Working Subcontractors)

Office of the Assistant to the Secretary for Labor Relations

LABOR RELATIONS LETTERS

Date: December 2, 1996 (Rev 1) Letter No. LR-96-01

Subject: Labor standards compliance requirements for self-employed laborers and mechanics (aka Working Subcontractors)

I. HUD policy on prevailing wage applicability.
II. Compliance and certification parameters.
III. Owners of businesses working with their crews.
IV. Owner-Operators of power equipment.
V. Truck drivers.

The Federal prevailing wage requirements and compliance standards for self-employed laborers and mechanics (also referred to as "working subcontractors") have long been a confusing and contentious area for the Department of Labor (DOL), HUD, the Internal Revenue Service and contractors and subcontractors.

The following policy represents an effort to provide practical guidance for field application. The guidance more specifically concerns the wage certification requirements for self-employed mechanics and laborers on projects subject to Federal labor standards provisions including Davis-Bacon and HUD-determined maintenance and nonroutine maintenance prevailing wage rate determinations. This policy does not attempt to establish whether working subcontractors are subject to Federal labor standards nor whether such working subcontractors are bona fide. The clear meaning of statutory provisions and regulatory definitions does not require further examination of applicability. Additionally, statutory and regulatory language are clear that the question of whether certain self-employed laborers and mechanics are bona fide subcontractors is not germane to the issue of prevailing wage standard applicability.

The DOL has issued an administrative policy which excludes "bona fide owner-operators of trucks who are independent contractors" from DBRA/CWHSSA provisions. See paragraph V of this Letter.

SL: Distribution: W-3-1; R-1; R-6; R-7; R-9; SL; 138-2, 138-7

I. HUD policy on prevailing wage applicability.

The Davis-Bacon Act (DBA), HUD program Related Acts (DBRA)concerning the payment of prevailing wages as determined by the Secretary of Labor, and the U.S. Housing Act of 1937 concerning the payment of prevailing wage rates established by HUD provide that the wage protections afforded in these statutes apply to laborers and mechanics employed on the covered work. The DBA and DBRA implementing regulations (29 CFR Part 5) specifically stipulate that these protections are provided regardless of any contractual relationship which may be alleged to exist between the contractor and such laborers and mechanics. Additionally, all laborers and mechanics must be paid unconditionally and not less often than once per week. HUD has followed DBA/DBRA prevailing wage parameters in its implementation, administration and enforcement of HUD-determined maintenance and nonroutine maintenance prevailing wage standards. (NOTE: The requirement to pay weekly wages is not applicable to the payment of prevailing routine maintenance

wage rates related to laborers and mechanics engaged in the operation of PHA and IHA housing developments.)

Therefore, it is HUD policy that in all cases where laborers and mechanics are employed on Federal prevailing wage-covered construction, maintenance and nonroutine maintenance work, laborers and mechanics shall be entitled to compensation (in the case of Davis-Bacon wages, weekly compensation) at wage rates not less than the prevailing rate for the type of work they perform regardless of any contractual relationship alleged to exist between a contractor or subcontractor and such laborers or mechanics.

The above policy statement is not a departure from previous HUD directives. The guidance presented below establishes uniform unassisted program contract administration and enforcement parameters for labor standards compliance and prevailing wage certification.

II. Compliance and certification parameters.

HUD policy clearly affords prevailing wage protection for all laborers and mechanics, regardless of contractual relationship. There is no exception to this protection for self-employed laborers or mechanics, including owners of businesses, sole-proprietors, partners, corporate officers, or others. This policy in no way precludes or limits any business or individual from participating in HUD-assisted construction, maintenance, or non-routine maintenance work. The issue is not one of eligibility, whether such persons are permitted to work on HUD-assisted projects, but of compliance standards - what HUD will accept from contractors and subcontractors to demonstrate that proper compliance has been achieved.

In this context, this Letter establishes a HUD administrative policy that laborers and mechanics may not certify to the payment of their own prevailing wages EXCEPT where the laborer or mechanic is the owner of a business working on the site of the work with his/her own crew. (This exception is described in detail in Paragraph III. Owner- operators of power equipment are discussed in Paragraph IV; Truck drivers are discussed in Paragraph V.)

The most frequent occurrence of self-employed workers on HUD-assisted projects involves mechanic/trade classifications (i.e., not laborer classifications). (For ease of reference, laborers and mechanics in this context are referred to as "mechanics" and include any case involving laborers.) These mechanics may be represented as sole-proprietors, self-employed mechanics, partners, or corporate officers - all with no direct employees engaged in the covered work.

Accordingly, HUD, and program participants responsible for labor standards administration and enforcement (e.g., PHAs, IHAS, CDBG recipients), may not accept certified payrolls reporting single or multiple owners (e.g., partners) certifying that they have paid to themselves the prevailing wage for their craft. For example, a sole- proprietor may not submit a payroll reporting himself or herself as simply "Owner" signing the certification as to his/her own wage payment from "draws" or other payment methods. Neither may several mechanics submit a payroll reporting themselves as "partners" with one or more certifying as to the payment of their wages or salaries. Such mechanics must instead be carried on the certified payroll of the contractor or subcontractor (the "responsible employer") for whom they are working and with whom they have executed a "contract" for services.

In these cases, maintenance of an accurate accounting of weekly work hours including any overtime hours for such mechanics is essential. Whatever method of

compensation computation is utilized (piecework, weekly contract draw for performance), the amount of weekly compensation divided by the actual hours of work performed for that week must result in an "effective" hourly wage rate for that week that is not less than the prevailing hourly rate for the type of work involved. This computation must take into account overtime pay rates (i.e., one and one half) for all hours worked in excess of 40 hours per week, pursuant to the Contract Work Hours and Safety Standards Act (CWHSSA), where applicable, and pursuant to the Fair Labor Standards Act where CWHSSA is not applicable.

The name, work classification, actual hours of work, effective hourly, wage rate, and wage payment for each such mechanic must be reported and certified on the responsible employer's weekly payroll. Note that the effective hourly wage rate for such mechanics may fluctuate from week to week. However, the effective hourly wage rate may not be less than the minimum prevailing rate for the respective craft. In any case where the effective rate falls below the corresponding craft prevailing wage rate, the responsible employer must compensate the mechanic at no less than the prevailing rate on the wage determination for that craft.

III. Owners of businesses working with their crew.

Owners of businesses working with their crew on the same
Unassisted job site may certify to the payment of their own prevailing wages in conjunction with the prevailing wages paid to their employees. This exception to reporting standards does not suggest that such owners are not likewise entitled to prevailing wages for their labor. Rather, it accepts the wage payment certification on weekly payroll reports by the owner for his/her own wages as that certification accompanies the certification offered for the payment of prevailing wages to his/her employees. Such owners need only list their name, work classification including "owner," and the daily and total hours worked. (Such owners do not need to list a rate of pay or amounts earned.)

IV. Owner-operators of power equipment.

Frequently, owner-operators of power equipment (e.g., backhoes, front end loaders) will contract for services at a rate for both "man and machine." In these cases, the owner-operator includes liability, equipment maintenance, and salary in an hourly or contract rate for services. Because of the prevalence of such practice and the inherent difficulty in ascribing costs for liability and maintenance costs versus hourly labor salary, HUD and its program clients may accept a combined ("man and machine") hourly rate on the responsible contractor's certified payroll provided that such hourly rate may not be less than the rate on the wage determination for the respective power equipment operator.

Note: Owner-operators of power equipment, like self-employed mechanics, may not submit their own payrolls certifying to the payment of their own wages BUT must be carried on the responsible contractor's certified payroll report.

V. Truck drivers.

As outlined earlier in this Letter, a DOL administrative policy excludes bona fide owner-operators of trucks who are independent contractors from DBRA/CWHSSA provisions concerning their own hours of work and rate(s) of pay. These truck "owner-operators" must be reported on weekly payrolls but the payrolls do not need to show the hours worked or rates - only the notation "Owner-operator." Note that any laborers or mechanics, including truck drivers, employed by the owner-operator/independent contractor are subject to DBRA/CWHSSA provisions in the usual manner.

This policy does not pertain to owner-operators of other equipment such as backhoes, bulldozers, cranes and scrapers (i.e., power equipment as noted in paragraph IV, above).

These compliance standards shall take effect immediately. Any exceptions to these standards must be approved in advance in writing by HUD Headquarters Office of Labor Relations.

Any questions concerning this Letter may be directed to the Office of Labor Relations at (202)708-0370 or, in the case of HUD program participants, to the HUD Field Labor Relations Staff with jurisdiction for your area.

Assistant to the Secretary for
Labor Relations

Richard_S._Allan@HUD.gov

If it is necessary to stand at the outboard or inboard edge of the deckload where less than 24 inches of bulwark, rail, coaming, or other protection exists, all employees shall be provided with a suitable means of protection against falling from the deckload.

(d) *First-aid and lifesaving equipment.* (1) Provisions for rendering first aid and medical assistance shall be in accordance with subpart D of this part.

(2) The employer shall ensure that there is in the vicinity of each barge in use at least one U.S. Coast Guard-approved 30-inch lifering with not less than 90 feet of line attached, and at least one portable or permanent ladder which will reach the top of the apron to the surface of the water. If the above equipment is not available at the pier, the employer shall furnish it during the time that he is working the barge.

(3) Employees walking or working on the unguarded decks of barges shall be protected with U.S. Coast Guard-approved work vests or buoyant vests.

(e) *Commercial diving operations.* Commercial diving operations shall be subject to subpart T of part 1910, §§ 1910.401–1910.441, of this chapter.

[39 FR 22801, June 24, 1974, as amended at 42 FR 37674, July 22, 1977]

§ 1926.606 Definitions applicable to this subpart.

(a) *Apron*—The area along the waterfront edge of the pier or wharf.

(b) *Bulwark*—The side of a ship above the upper deck.

(c) *Coaming*—The raised frame, as around a hatchway in the deck, to keep out water.

(d) *Jacob's ladder*—A marine ladder of rope or chain with wooden or metal rungs.

(e) *Rail*, for the purpose of § 1926.605, means a light structure serving as a guard at the outer edge of a ship's deck.

Subpart P—Excavations

AUTHORITY: Sec. 107, Contract Worker Hours and Safety Standards Act (Construction Safety Act) (40 U.S.C. 333); Secs. 4, 6, 8, Occupational Safety and Health Act of 1970 (29 U.S.C. 653, 655, 657); Secretary of Labor's Order No. 12–71 (36 FR 8754), 8–76 (41 FR 25059), or 9–83 (48 FR 35736), as applicable, and 29 CFR part 1911.

SOURCE: 54 FR 45959, Oct. 31, 1989, unless otherwise noted.

§ 1926.650 Scope, application, and definitions applicable to this subpart.

(a) *Scope and application.* This subpart applies to all open excavations made in the earth's surface. Excavations are defined to include trenches.

(b) *Definitions applicable to this subpart.*

Accepted engineering practices means those requirements which are compatible with standards of practice required by a registered professional engineer.

Aluminum Hydraulic Shoring means a pre-engineered shoring system comprised of aluminum hydraulic cylinders (crossbraces) used in conjunction with vertical rails (uprights) or horizontal rails (walers). Such system is designed, specifically to support the sidewalls of an excavation and prevent cave-ins.

Bell-bottom pier hole means a type of shaft or footing excavation, the bottom of which is made larger than the cross section above to form a belled shape.

Benching (Benching system) means a method of protecting employees from cave-ins by excavating the sides of an excavation to form one or a series of horizontal levels or steps, usually with vertical or near-vertical surfaces between levels.

Cave-in means the separation of a mass of soil or rock material from the side of an excavation, or the loss of soil from under a trench shield or support system, and its sudden movement into the excavation, either by falling or sliding, in sufficient quantity so that it could entrap, bury, or otherwise injure and immobilize a person.

Competent person means one who is capable of identifying existing and predictable hazards in the surroundings, or working conditions which are unsanitary, hazardous, or dangerous to employees, and who has authorization to take prompt corrective measures to eliminate them.

Cross braces mean the horizontal members of a shoring system installed perpendicular to the sides of the excavation, the ends of which bear against either uprights or wales.

Excavation means any man-made cut, cavity, trench, or depression in an earth surface, formed by earth removal.

Faces or *sides* means the vertical or inclined earth surfaces formed as a result of excavation work.

Failure means the breakage, displacement, or permanent deformation of a structural member or connection so as to reduce its structural integrity and its supportive capabilities.

Hazardous atmosphere means an atmosphere which by reason of being explosive, flammable, poisonous, corrosive, oxidizing, irritating, oxygen deficient, toxic, or otherwise harmful, may cause death, illness, or injury.

Kickout means the accidental release or failure of a cross brace.

Protective system means a method of protecting employees from cave-ins, from material that could fall or roll from an excavation face or into an excavation, or from the collapse of adjacent structures. Protective systems include support systems, sloping and benching systems, shield systems, and other systems that provide the necessary protection.

Ramp means an inclined walking or working surface that is used to gain access to one point from another, and is constructed from earth or from structural materials such as steel or wood.

Registered Professional Engineer means a person who is registered as a professional engineer in the state where the work is to be performed. However, a professional engineer, registered in any state is deemed to be a ''registered professional engineer'' within the meaning of this standard when approving designs for ''manufactured protective systems'' or ''tabulated data'' to be used in interstate commerce.

Sheeting means the members of a shoring system that retain the earth in position and in turn are supported by other members of the shoring system.

Shield (Shield system) means a structure that is able to withstand the forces imposed on it by a cave-in and thereby protect employees within the structure. Shields can be permanent structures or can be designed to be portable and moved along as work progresses. Additionally, shields can be either premanufactured or job-built in accordance with §1926.652 (c)(3) or (c)(4). Shields used in trenches are usually referred to as ''trench boxes'' or ''trench shields.''

Shoring (Shoring system) means a structure such as a metal hydraulic, mechanical or timber shoring system that supports the sides of an excavation and which is designed to prevent cave-ins.

Sides. See ''Faces.''

Sloping (Sloping system) means a method of protecting employees from cave-ins by excavating to form sides of an excavation that are inclined away from the excavation so as to prevent cave-ins. The angle of incline required to prevent a cave-in varies with differences in such factors as the soil type, environmental conditions of exposure, and application of surcharge loads.

Stable rock means natural solid mineral material that can be excavated with vertical sides and will remain intact while exposed. Unstable rock is considered to be stable when the rock material on the side or sides of the excavation is secured against caving-in or movement by rock bolts or by another protective system that has been designed by a registered professional engineer.

Structural ramp means a ramp built of steel or wood, usually used for vehicle access. Ramps made of soil or rock are not considered structural ramps.

Support system means a structure such as underpinning, bracing, or shoring, which provides support to an adjacent structure, underground installation, or the sides of an excavation.

Tabulated data means tables and charts approved by a registered professional engineer and used to design and construct a protective system.

Trench (Trench excavation) means a narrow excavation (in relation to its length) made below the surface of the ground. In general, the depth is greater than the width, but the width of a trench (measured at the bottom) is not greater than 15 feet (4.6 m). If forms or other structures are installed or constructed in an excavation so as to reduce the dimension measured from the forms or structure to the side of the excavation to 15 feet (4.6 m) or less

(measured at the bottom of the excavation), the excavation is also considered to be a trench.

Trench box. See ''Shield.''

Trench shield. See ''Shield.''

Uprights means the vertical members of a trench shoring system placed in contact with the earth and usually positioned so that individual members do not contact each other. Uprights placed so that individual members are closely spaced, in contact with or interconnected to each other, are often called ''sheeting.''

Wales means horizontal members of a shoring system placed parallel to the excavation face whose sides bear against the vertical members of the shoring system or earth.

§ 1926.651 Specific excavation requirements.

(a) *Surface encumbrances*. All surface encumbrances that are located so as to create a hazard to employees shall be removed or supported, as necessary, to safeguard employees.

(b) *Underground installations*. (1) The estimated location of utility installations, such as sewer, telephone, fuel, electric, water lines, or any other underground installations that reasonably may be expected to be encountered during excavation work, shall be determined prior to opening an excavation.

(2) Utility companies or owners shall be contacted within established or customary local response times, advised of the proposed work, and asked to establish the location of the utility underground installations prior to the start of actual excavation. When utility companies or owners cannot respond to a request to locate underground utility installations within 24 hours (unless a longer period is required by state or local law), or cannot establish the exact location of these installations, the employer may proceed, provided the employer does so with caution, and provided detection equipment or other acceptable means to locate utility installations are used.

(3) When excavation operations approach the estimated location of underground installations, the exact location of the installations shall be determined by safe and acceptable means.

(4) While the excavation is open, underground installations shall be protected, supported or removed as necessary to safeguard employees.

(c) *Access and egress*—(1) *Structural ramps*. (i) Structural ramps that are used solely by employees as a means of access or egress from excavations shall be designed by a competent person. Structural ramps used for access or egress of equipment shall be designed by a competent person qualified in structural design, and shall be constructed in accordance with the design.

(ii) Ramps and runways constructed of two or more structural members shall have the structural members connected together to prevent displacement.

(iii) Structural members used for ramps and runways shall be of uniform thickness.

(iv) Cleats or other appropriate means used to connect runway structural members shall be attached to the bottom of the runway or shall be attached in a manner to prevent tripping.

(v) Structural ramps used in lieu of steps shall be provided with cleats or other surface treatments on the top surface to prevent slipping.

(2) *Means of egress from trench excavations*. A stairway, ladder, ramp or other safe means of egress shall be located in trench excavations that are 4 feet (1.22 m) or more in depth so as to require no more than 25 feet (7.62 m) of lateral travel for employees.

(d) *Exposure to vehicular traffic*. Employees exposed to public vehicular traffic shall be provided with, and shall wear, warning vests or other suitable garments marked with or made of reflectorized or high-visibility material.

(e) *Exposure to falling loads*. No employee shall be permitted underneath loads handled by lifting or digging equipment. Employees shall be required to stand away from any vehicle being loaded or unloaded to avoid being struck by any spillage or falling materials. Operators may remain in the cabs of vehicles being loaded or unloaded when the vehicles are equipped, in accordance with § 1926.601(b)(6), to provide adequate protection for the operator during loading and unloading operations.

(f) *Warning system for mobile equipment.* When mobile equipment is operated adjacent to an excavation, or when such equipment is required to approach the edge of an excavation, and the operator does not have a clear and direct view of the edge of the excavation, a warning system shall be utilized such as barricades, hand or mechanical signals, or stop logs. If possible, the grade should be away from the excavation.

(g) *Hazardous atmospheres*—(1) *Testing and controls.* In addition to the requirements set forth in subparts D and E of this part (29 CFR 1926.50–1926.107) to prevent exposure to harmful levels of atmospheric contaminants and to assure acceptable atmospheric conditions, the following requirements shall apply:

(i) Where oxygen deficiency (atmospheres containing less than 19.5 percent oxygen) or a hazardous atmosphere exists or could reasonably be expected to exist, such as in excavations in landfill areas or excavations in areas where hazardous substances are stored nearby, the atmospheres in the excavation shall be tested before employees enter excavations greater than 4 feet (1.22 m) in depth.

(ii) Adequate precautions shall be taken to prevent employee exposure to atmospheres containing less than 19.5 percent oxygen and other hazardous atmospheres. These precautions include providing proper respiratory protection or ventilation in accordance with subparts D and E of this part respectively.

(iii) Adequate precaution shall be taken such as providing ventilation, to prevent employee exposure to an atmosphere containing a concentration of a flammable gas in excess of 20 percent of the lower flammable limit of the gas.

(iv) When controls are used that are intended to reduce the level of atmospheric contaminants to acceptable levels, testing shall be conducted as often as necessary to ensure that the atmosphere remains safe.

(2) *Emergency rescue equipment.* (i) Emergency rescue equipment, such as breathing apparatus, a safety harness and line, or a basket stretcher, shall be readily available where hazardous atmospheric conditions exist or may reasonably be expected to develop during work in an excavation. This equipment shall be attended when in use.

(ii) Employees entering bell-bottom pier holes, or other similar deep and confined footing excavations, shall wear a harness with a life-line securely attached to it. The lifeline shall be separate from any line used to handle materials, and shall be individually attended at all times while the employee wearing the lifeline is in the excavation.

(h) *Protection from hazards associated with water accumulation.* (1) Employees shall not work in excavations in which there is accumulated water, or in excavations in which water is accumulating, unless adequate precautions have been taken to protect employees against the hazards posed by water accumulation. The precautions necessary to protect employees adequately vary with each situation, but could include special support or shield systems to protect from cave-ins, water removal to control the level of accumulating water, or use of a safety harness and lifeline.

(2) If water is controlled or prevented from accumulating by the use of water removal equipment, the water removal equipment and operations shall be monitored by a competent person to ensure proper operation.

(3) If excavation work interrupts the natural drainage of surface water (such as streams), diversion ditches, dikes, or other suitable means shall be used to prevent surface water from entering the excavation and to provide adequate drainage of the area adjacent to the excavation. Excavations subject to runoff from heavy rains will require an inspection by a competent person and compliance with paragraphs (h)(1) and (h)(2) of this section.

(i) *Stability of adjacent structures.* (1) Where the stability of adjoining buildings, walls, or other structures is endangered by excavation operations, support systems such as shoring, bracing, or underpinning shall be provided to ensure the stability of such structures for the protection of employees.

(2) Excavation below the level of the base or footing of any foundation or retaining wall that could be reasonably

expected to pose a hazard to employees shall not be permitted except when:

(i) A support system, such as underpinning, is provided to ensure the safety of employees and the stability of the structure; or

(ii) The excavation is in stable rock; or

(iii) A registered professional engineer has approved the determination that the structure is sufficently removed from the excavation so as to be unaffected by the excavation activity; or

(iv) A registered professional engineer has approved the determination that such excavation work will not pose a hazard to employees.

(3) Sidewalks, pavements, and appurtenant structure shall not be undermined unless a support system or another method of protection is provided to protect employees from the possible collapse of such structures.

(j) *Protection of employees from loose rock or soil.* (1) Adequate protection shall be provided to protect employees from loose rock or soil that could pose a hazard by falling or rolling from an excavation face. Such protection shall consist of scaling to remove loose material; installation of protective barricades at intervals as necessary on the face to stop and contain falling material; or other means that provide equivalent protection.

(2) Employees shall be protected from excavated or other materials or equipment that could pose a hazard by falling or rolling into excavations. Protection shall be provided by placing and keeping such materials or equipment at least 2 feet (.61 m) from the edge of excavations, or by the use of retaining devices that are sufficient to prevent materials or equipment from falling or rolling into excavations, or by a combination of both if necessary.

(k) *Inspections.* (1) Daily inspections of excavations, the adjacent areas, and protective systems shall be made by a competent person for evidence of a situation that could result in possible cave-ins, indications of failure of protective systems, hazardous atmospheres, or other hazardous conditions. An inspection shall be conducted by the competent person prior to the start of work and as needed throughout the shift. Inspections shall also be made after every rainstorm or other hazard increasing occurrence. These inspections are only required when employee exposure can be reasonably anticipated.

(2) Where the competent person finds evidence of a situation that could result in a possible cave-in, indications of failure of protective systems, hazardous atmospheres, or other hazardous conditions, exposed employees shall be removed from the hazardous area until the necessary precautions have been taken to ensure their safety.

(l) Walkways shall be provided where employees or equipment are required or permitted to cross over excavations. Guardrails which comply with § 1926.502(b) shall be provided where walkways are 6 feet (1.8 m) or more above lower levels.

[54 FR 45959, Oct. 31, 1989, as amended by 59 FR 40730, Aug. 9, 1994]

§ 1926.652 Requirements for protective systems.

(a) *Protection of employees in excavations.* (1) Each employee in an excavation shall be protected from cave-ins by an adequate protective system designed in accordance with paragraph (b) or (c) of this section except when:

(i) Excavations are made entirely in stable rock; or

(ii) Excavations are less than 5 feet (1.52m) in depth and examination of the ground by a competent person provides no indication of a potential cave-in.

(2) Protective systems shall have the capacity to resist without failure all loads that are intended or could reasonably be expected to be applied or transmitted to the system.

(b) *Design of sloping and benching systems.* The slopes and configurations of sloping and benching systems shall be selected and constructed by the employer or his designee and shall be in accordance with the requirements of paragraph (b)(1); or, in the alternative, paragraph (b)(2); or, in the alternative, paragraph (b)(3), or, in the alternative, paragraph (b)(4), as follows:

(1) *Option (1)—Allowable configurations and slopes.* (i) Excavations shall be sloped at an angle not steeper than one and one-half horizontal to one vertical

(34 degrees measured from the horizontal), unless the employer uses one of the other options listed below.

(ii) Slopes specified in paragraph (b)(1)(i) of this section, shall be excavated to form configurations that are in accordance with the slopes shown for Type C soil in Appendix B to this subpart.

(2) *Option (2)—Determination of slopes and configurations using Appendices A and B.* Maximum allowable slopes, and allowable configurations for sloping and benching systems, shall be determined in accordance with the conditions and requirements set forth in appendices A and B to this subpart.

(3) *Option (3)—Designs using other tabulated data.* (i) Designs of sloping or benching systems shall be selected from and be in accordance with tabulated data, such as tables and charts.

(ii) The tabulated data shall be in written form and shall include all of the following:

(A) Identification of the parameters that affect the selection of a sloping or benching system drawn from such data;

(B) Identification of the limits of use of the data, to include the magnitude and configuration of slopes determined to be safe;

(C) Explanatory information as may be necessary to aid the user in making a correct selection of a protective system from the data.

(iii) At least one copy of the tabulated data which identifies the registered professional engineer who approved the data, shall be maintained at the jobsite during construction of the protective system. After that time the data may be stored off the jobsite, but a copy of the data shall be made available to the Secretary upon request.

(4) *Option (4)—Design by a registered professional engineer.* (i) Sloping and benching systems not utilizing Option (1) or Option (2) or Option (3) under paragraph (b) of this section shall be approved by a registered professional engineer.

(ii) Designs shall be in written form and shall include at least the following:

(A) The magnitude of the slopes that were determined to be safe for the particular project;

(B) The configurations that were determined to be safe for the particular project; and

(C) The identity of the registered professional engineer approving the design.

(iii) At least one copy of the design shall be maintained at the jobsite while the slope is being constructed. After that time the design need not be at the jobsite, but a copy shall be made available to the Secretary upon request.

(c) *Design of support systems, shield systems, and other protective systems.* Designs of support systems shield systems, and other protective systems shall be selected and constructed by the employer or his designee and shall be in accordance with the requirements of paragraph (c)(1); or, in the alternative, paragraph (c)(2); or, in the alternative, paragraph (c)(3); or, in the alternative, paragraph (c)(4) as follows:

(1) *Option (1)—Designs using appendices A, C and D.* Designs for timber shoring in trenches shall be determined in accordance with the conditions and requirements set forth in appendices A and C to this subpart. Designs for aluminum hydraulic shoring shall be in accordance with paragraph (c)(2) of this section, but if manufacturer's tabulated data cannot be utilized, designs shall be in accordance with appendix D.

(2) *Option (2)—Designs Using Manufacturer's Tabulated Data.* (i) Design of support systems, shield systems, or other protective systems that are drawn from manufacturer's tabulated data shall be in accordance with all specifications, recommendations, and limitations issued or made by the manufacturer.

(ii) Deviation from the specifications, recommendations, and limitations issued or made by the manufacturer shall only be allowed after the manufacturer issues specific written approval.

(iii) Manufacturer's specifications, recommendations, and limitations, and manufacturer's approval to deviate from the specifications, recommendations, and limitations shall be in written form at the jobsite during construction of the protective system. After that time this data may be stored off the jobsite, but a copy shall

be made available to the Secretary upon request.

(3) *Option (3)—Designs using other tabulated data.* (i) Designs of support systems, shield systems, or other protective systems shall be selected from and be in accordance with tabulated data, such as tables and charts.

(ii) The tabulated data shall be in written form and include all of the following:

(A) Identification of the parameters that affect the selection of a protective system drawn from such data;

(B) Identification of the limits of use of the data;

(C) Explanatory information as may be necessary to aid the user in making a correct selection of a protective system from the data.

(iii) At least one copy of the tabulated data, which identifies the registered professional engineer who approved the data, shall be maintained at the jobsite during construction of the protective system. After that time the data may be stored off the jobsite, but a copy of the data shall be made available to the Secretary upon request.

(4) *Option (4)—Design by a registered professional engineer.* (i) Support systems, shield systems, and other protective systems not utilizing Option 1, Option 2 or Option 3, above, shall be approved by a registered professional engineer.

(ii) Designs shall be in written form and shall include the following:

(A) A plan indicating the sizes, types, and configurations of the materials to be used in the protective system; and

(B) The identity of the registered professional engineer approving the design.

(iii) At least one copy of the design shall be maintained at the jobsite during construction of the protective system. After that time, the design may be stored off the jobsite, but a copy of the design shall be made available to the Secretary upon request.

(d) *Materials and equipment.* (1) Materials and equipment used for protective systems shall be free from damage or defects that might impair their proper function.

(2) Manufactured materials and equipment used for protective systems shall be used and maintained in a manner that is consistent with the recommendations of the manufacturer, and in a manner that will prevent employee exposure to hazards.

(3) When material or equipment that is used for protective systems is damaged, a competent person shall examine the material or equipment and evaluate its suitability for continued use. If the competent person cannot assure the material or equipment is able to support the intended loads or is otherwise suitable for safe use, then such material or equipment shall be removed from service, and shall be evaluated and approved by a registered professional engineer before being returned to service.

(e) *Installation and removal of support*—(1) *General.* (i) Members of support systems shall be securely connected together to prevent sliding, falling, kickouts, or other predictable failure.

(ii) Support systems shall be installed and removed in a manner that protects employees from cave-ins, structural collapses, or from being struck by members of the support system.

(iii) Individual members of support systems shall not be subjected to loads exceeding those which those members were designed to withstand.

(iv) Before temporary removal of individual members begins, additional precautions shall be taken to ensure the safety of employees, such as installing other structural members to carry the loads imposed on the support system.

(v) Removal shall begin at, and progress from, the bottom of the excavation. Members shall be released slowly so as to note any indication of possible failure of the remaining members of the structure or possible cave-in of the sides of the excavation.

(vi) Backfilling shall progress together with the removal of support systems from excavations.

(2) *Additional requirements for support systems for trench excavations.* (i) Excavation of material to a level no greater than 2 feet (.61 m) below the bottom of the members of a support system shall be permitted, but only if the system is designed to resist the forces calculated for the full depth of the trench, and

there are no indications while the trench is open of a possible loss of soil from behind or below the bottom of the support system.

(ii) Installation of a support system shall be closely coordinated with the excavation of trenches.

(f) *Sloping and benching systems.* Employees shall not be permitted to work on the faces of sloped or benched excavations at levels above other employees except when employees at the lower levels are adequately protected from the hazard of falling, rolling, or sliding material or equipment.

(g) *Shield systems*—(1) *General.* (i) Shield systems shall not be subjected to loads exceeding those which the system was designed to withstand.

(ii) Shields shall be installed in a manner to restrict lateral or other hazardous movement of the shield in the event of the application of sudden lateral loads.

(iii) Employees shall be protected from the hazard of cave-ins when entering or exiting the areas protected by shields.

(iv) Employees shall not be allowed in shields when shields are being installed, removed, or moved vertically.

(2) *Additional requirement for shield systems used in trench excavations.* Excavations of earth material to a level not greater than 2 feet (.61 m) below the bottom of a shield shall be permitted, but only if the shield is designed to resist the forces calculated for the full depth of the trench, and there are no indications while the trench is open of a possible loss of soil from behind or below the bottom of the shield.

APPENDIX A TO SUBPART P OF PART 1926—SOIL CLASSIFICATION

(a) *Scope and application*—(1) *Scope.* This appendix describes a method of classifying soil and rock deposits based on site and environmental conditions, and on the structure and composition of the earth deposits. The appendix contains definitions, sets forth requirements, and describes acceptable visual and manual tests for use in classifying soils.

(2) *Application.* This appendix applies when a sloping or benching system is designed in accordance with the requirements set forth in §1926.652(b)(2) as a method of protection for employees from cave-ins. This appendix also applies when timber shoring for excavations is designed as a method of protection from cave-ins in accordance with appendix C to subpart P of part 1926, and when aluminum hydraulic shoring is designed in accordance with appendix D. This Appendix also applies if other protective systems are designed and selected for use from data prepared in accordance with the requirements set forth in §1926.652(c), and the use of the data is predicated on the use of the soil classification system set forth in this appendix.

(b) *Definitions.* The definitions and examples given below are based on, in whole or in part, the following: American Society for Testing Materials (ASTM) Standards D653–85 and D2488; The Unified Soils Classification System, The U.S. Department of Agriculture (USDA) Textural Classification Scheme; and The National Bureau of Standards Report BSS–121.

Cemented soil means a soil in which the particles are held together by a chemical agent, such as calcium carbonate, such that a hand-size sample cannot be crushed into powder or individual soil particles by finger pressure.

Cohesive soil means clay (fine grained soil), or soil with a high clay content, which has cohesive strength. Cohesive soil does not crumble, can be excavated with vertical sideslopes, and is plastic when moist. Cohesive soil is hard to break up when dry, and exhibits significant cohesion when submerged. Cohesive soils include clayey silt, sandy clay, silty clay, clay and organic clay.

Dry soil means soil that does not exhibit visible signs of moisture content.

Fissured means a soil material that has a tendency to break along definite planes of fracture with little resistance, or a material that exhibits open cracks, such as tension cracks, in an exposed surface.

Granular soil means gravel, sand, or silt, (coarse grained soil) with little or no clay content. Granular soil has no cohesive strength. Some moist granular soils exhibit apparent cohesion. Granular soil cannot be molded when moist and crumbles easily when dry.

Layered system means two or more distinctly different soil or rock types arranged in layers. Micaceous seams or weakened planes in rock or shale are considered layered.

Moist soil means a condition in which a soil looks and feels damp. Moist cohesive soil can easily be shaped into a ball and rolled into small diameter threads before crumbling. Moist granular soil that contains some cohesive material will exhibit signs of cohesion between particles.

Plastic means a property of a soil which allows the soil to be deformed or molded without cracking, or appreciable volume change.

Saturated soil means a soil in which the voids are filled with water. Saturation does not require flow. Saturation, or near saturation, is necessary for the proper use of instruments such as a pocket penetrometer or sheer vane.

Soil classification system means, for the purpose of this subpart, a method of categorizing soil and rock deposits in a hierarchy of Stable Rock, Type A, Type B, and Type C, in decreasing order of stability. The categories are determined based on an analysis of the properties and performance characteristics of the deposits and the environmental conditions of exposure.

Stable rock means natural solid mineral matter that can be excavated with vertical sides and remain intact while exposed.

Submerged soil means soil which is underwater or is free seeping.

Type A means cohesive soils with an unconfined compressive strength of 1.5 ton per square foot (tsf) (144 kPa) or greater. Examples of cohesive soils are: clay, silty clay, sandy clay, clay loam and, in some cases, silty clay loam and sandy clay loam. Cemented soils such as caliche and hardpan are also considered Type A. However, no soil is Type A if:

(i) The soil is fissured; or

(ii) The soil is subject to vibration from heavy traffic, pile driving, or similar effects; or

(iii) The soil has been previously disturbed; or

(iv) The soil is part of a sloped, layered system where the layers dip into the excavation on a slope of four horizontal to one vertical (4H:1V) or greater; or

(v) The material is subject to other factors that would require it to be classified as a less stable material.

Type B means:

(i) Cohesive soil with an unconfined compressive strength greater than 0.5 tsf (48 kPa) but less than 1.5 tsf (144 kPa); or

(ii) Granular cohesionless soils including: angular gravel (similar to crushed rock), silt, silt loam, sandy loam and, in some cases, silty clay loam and sandy clay loam.

(iii) Previously disturbed soils except those which would otherwise be classed as Type C soil.

(iv) Soil that meets the unconfined compressive strength or cementation requirements for Type A, but is fissured or subject to vibration; or

(v) Dry rock that is not stable; or

(vi) Material that is part of a sloped, layered system where the layers dip into the excavation on a slope less steep than four horizontal to one vertical (4H:1V), but only if the material would otherwise be classified as Type B.

Type C means:

(i) Cohesive soil with an unconfined compressive strength of 0.5 tsf (48 kPa) or less; or

(ii) Granular soils including gravel, sand, and loamy sand; or

(iii) Submerged soil or soil from which water is freely seeping; or

(iv) Submerged rock that is not stable, or

(v) Material in a sloped, layered system where the layers dip into the excavation or a slope of four horizontal to one vertical (4H:1V) or steeper.

Unconfined compressive strength means the load per unit area at which a soil will fail in compression. It can be determined by laboratory testing, or estimated in the field using a pocket penetrometer, by thumb penetration tests, and other methods.

Wet soil means soil that contains significantly more moisture than moist soil, but in such a range of values that cohesive material will slump or begin to flow when vibrated. Granular material that would exhibit cohesive properties when moist will lose those cohesive properties when wet.

(c) *Requirements*—(1) *Classification of soil and rock deposits.* Each soil and rock deposit shall be classified by a competent person as Stable Rock, Type A, Type B, or Type C in accordance with the definitions set forth in paragraph (b) of this appendix.

(2) *Basis of classification.* The classification of the deposits shall be made based on the results of at least one visual and at least one manual analysis. Such analyses shall be conducted by a competent person using tests described in paragraph (d) below, or in other recognized methods of soil classification and testing such as those adopted by the America Society for Testing Materials, or the U.S. Department of Agriculture textural classification system.

(3) *Visual and manual analyses.* The visual and manual analyses, such as those noted as being acceptable in paragraph (d) of this appendix, shall be designed and conducted to provide sufficient quantitative and qualitative information as may be necessary to identify properly the properties, factors, and conditions affecting the classification of the deposits.

(4) *Layered systems.* In a layered system, the system shall be classified in accordance with its weakest layer. However, each layer may be classified individually where a more stable layer lies under a less stable layer.

(5) *Reclassification.* If, after classifying a deposit, the properties, factors, or conditions affecting its classification change in any way, the changes shall be evaluated by a competent person. The deposit shall be reclassified as necessary to reflect the changed circumstances.

(d) *Acceptable visual and manual tests.*—(1) *Visual tests.* Visual analysis is conducted to determine qualitative information regarding the excavation site in general, the soil adjacent to the excavation, the soil forming the sides of the open excavation, and the soil taken as samples from excavated material.

(i) Observe samples of soil that are excavated and soil in the sides of the excavation. Estimate the range of particle sizes and the relative amounts of the particle sizes. Soil that is primarily composed of fine-grained

material is cohesive material. Soil composed primarily of coarse-grained sand or gravel is granular material.

(ii) Observe soil as it is excavated. Soil that remains in clumps when excavated is cohesive. Soil that breaks up easily and does not stay in clumps is granular.

(iii) Observe the side of the opened excavation and the surface area adjacent to the excavation. Crack-like openings such as tension cracks could indicate fissured material. If chunks of soil spall off a vertical side, the soil could be fissured. Small spalls are evidence of moving ground and are indications of potentially hazardous situations.

(iv) Observe the area adjacent to the excavation and the excavation itself for evidence of existing utility and other underground structures, and to identify previously disturbed soil.

(v) Observe the opened side of the excavation to identify layered systems. Examine layered systems to identify if the layers slope toward the excavation. Estimate the degree of slope of the layers.

(vi) Observe the area adjacent to the excavation and the sides of the opened excavation for evidence of surface water, water seeping from the sides of the excavation, or the location of the level of the water table.

(vii) Observe the area adjacent to the excavation and the area within the excavation for sources of vibration that may affect the stability of the excavation face.

(2) *Manual tests.* Manual analysis of soil samples is conducted to determine quantitative as well as qualitative properties of soil and to provide more information in order to classify soil properly.

(i) *Plasticity.* Mold a moist or wet sample of soil into a ball and attempt to roll it into threads as thin as ⅛-inch in diameter. Cohesive material can be successfully rolled into threads without crumbling. For example, if at least a two inch (50 mm) length of ⅛-inch thread can be held on one end without tearing, the soil is cohesive.

(ii) *Dry strength.* If the soil is dry and crumbles on its own or with moderate pressure into individual grains or fine powder, it is granular (any combination of gravel, sand, or silt). If the soil is dry and falls into clumps which break up into smaller clumps, but the smaller clumps can only be broken up with difficulty, it may be clay in any combination with gravel, sand or silt. If the dry soil breaks into clumps which do not break up into small clumps and which can only be broken with difficulty, and there is no visual indication the soil is fissured, the soil may be considered unfissured.

(iii) *Thumb penetration.* The thumb penetration test can be used to estimate the unconfined compressive strength of cohesive soils. (This test is based on the thumb penetration test described in American Society for Testing and Materials (ASTM) Standard designation D2488—''Standard Recommended Practice for Description of Soils (Visual—Manual Procedure).'') Type A soils with an unconfined compressive strength of 1.5 tsf can be readily indented by the thumb; however, they can be penetrated by the thumb only with very great effort. Type C soils with an unconfined compressive strength of 0.5 tsf can be easily penetrated several inches by the thumb, and can be molded by light finger pressure. This test should be conducted on an undisturbed soil sample, such as a large clump of spoil, as soon as practicable after excavation to keep to a miminum the effects of exposure to drying influences. If the excavation is later exposed to wetting influences (rain, flooding), the classification of the soil must be changed accordingly.

(iv) *Other strength tests.* Estimates of unconfined compressive strength of soils can also be obtained by use of a pocket penetrometer or by using a hand-operated shearvane.

(v) *Drying test.* The basic purpose of the drying test is to differentiate between cohesive material with fissures, unfissured cohesive material, and granular material. The procedure for the drying test involves drying a sample of soil that is approximately one inch thick (2.54 cm) and six inches (15.24 cm) in diameter until it is thoroughly dry:

(A) If the sample develops cracks as it dries, significant fissures are indicated.

(B) Samples that dry without cracking are to be broken by hand. If considerable force is necessary to break a sample, the soil has significant cohesive material content. The soil can be classified as a unfissured cohesive material and the unconfined compressive strength should be determined.

(C) If a sample breaks easily by hand, it is either a fissured cohesive material or a granular material. To distinguish between the two, pulverize the dried clumps of the sample by hand or by stepping on them. If the clumps do not pulverize easily, the material is cohesive with fissures. If they pulverize easily into very small fragments, the material is granular.

APPENDIX B TO SUBPART P OF PART 1926—SLOPING AND BENCHING

(a) *Scope and application.* This appendix contains specifications for sloping and benching when used as methods of protecting employees working in excavations from cave-ins. The requirements of this appendix apply when the design of sloping and benching protective systems is to be performed in accordance with the requirements set forth in § 1926.652(b)(2).

(b) *Definitions.*

Actual slope means the slope to which an excavation face is excavated.

Distress means that the soil is in a condition where a cave-in is imminent or is likely

to occur. Distress is evidenced by such phenomena as the development of fissures in the face of or adjacent to an open excavation; the subsidence of the edge of an excavation; the slumping of material from the face or the bulging or heaving of material from the bottom of an excavation; the spalling of material from the face of an excavation; and ravelling, i.e., small amounts of material such as pebbles or little clumps of material suddenly separating from the face of an excavation and trickling or rolling down into the excavation.

Maximum allowable slope means the steepest incline of an excavation face that is acceptable for the most favorable site conditions as protection against cave-ins, and is expressed as the ratio of horizontal distance to vertical rise (H:V).

Short term exposure means a period of time less than or equal to 24 hours that an excavation is open.

(c) *Requirements*—(1) *Soil classification.* Soil and rock deposits shall be classified in accordance with appendix A to subpart P of part 1926.

(2) *Maximum allowable slope.* The maximum allowable slope for a soil or rock deposit shall be determined from Table B–1 of this appendix.

(3) *Actual slope.* (i) The actual slope shall not be steeper than the maximum allowable slope.

(ii) The actual slope shall be less steep than the maximum allowable slope, when there are signs of distress. If that situation occurs, the slope shall be cut back to an actual slope which is at least ½ horizontal to one vertical (½H:1V) less steep than the maximum allowable slope.

(iii) When surcharge loads from stored material or equipment, operating equipment, or traffic are present, a competent person shall determine the degree to which the actual slope must be reduced below the maximum allowable slope, and shall assure that such reduction is achieved. Surcharge loads from adjacent structures shall be evaluated in accordance with §1926.651(i).

(4) *Configurations.* Configurations of sloping and benching systems shall be in accordance with Figure B–1.

TABLE B-1

MAXIMUM ALLOWABLE SLOPES

SOIL OR ROCK TYPE	MAXIMUM ALLOWABLE SLOPES (H:V) [1] FOR EXCAVATIONS LESS THAN 20 FEET DEEP [3]
STABLE ROCK	VERTICAL (90°)
TYPE A [2]	3/4 : 1 (53°)
TYPE B	1:1 (45°)
TYPE C	1½: 1 (34°)

NOTES:

1. Numbers shown in parentheses next to maximum allowable slopes are angles expressed in degrees from the horizontal. Angles have been rounded off.
2. A short-term maximum allowable slope of 1/2H:1V (63°) is allowed in excavations in Type A soil that are 12 feet (3.67 m) or less in depth. Short-term maximum allowable slopes for excavations greater than 12 feet (3.67 m) in depth shall be 3/4H:1V (53°).
3. Sloping or benching for excavations greater than 20 feet deep shall be designed by a registered professional engineer.

Figure B–1

Slope Configurations

(All slopes stated below are in the horizontal to vertical ratio)

B–1.1 Excavations made in Type A soil.

1. All simple slope excavation 20 feet or less in depth shall have a maximum allowable slope of ¾:1.

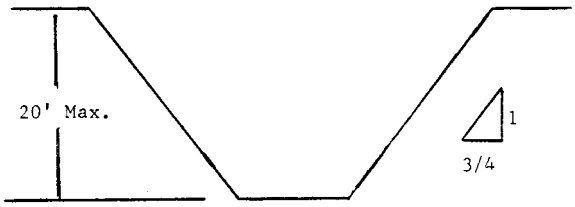

SIMPLE SLOPE—GENERAL

Exception: Simple slope excavations which are open 24 hours or less (short term) and which are 12 feet or less in depth shall have a maximum allowable slope of ½:1.

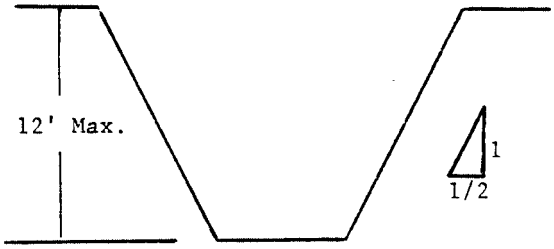

SIMPLE SLOPE—SHORT TERM

2. All benched excavations 20 feet or less in depth shall have a maximum allowable slope of ¾ to 1 and maximum bench dimensions as follows:

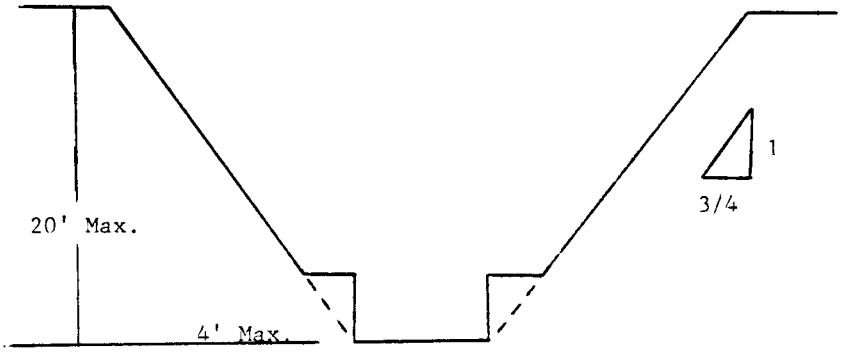

SIMPLE BENCH

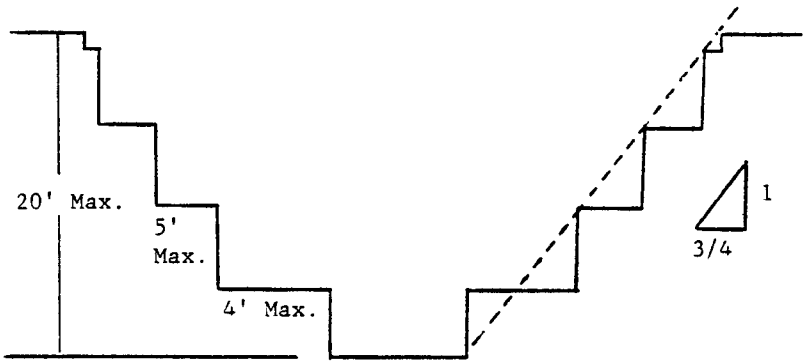

MULTIPLE BENCH

3. All excavations 8 feet or less in depth which have unsupported vertically sided lower portions shall have a maximum vertical side of 3½ feet.

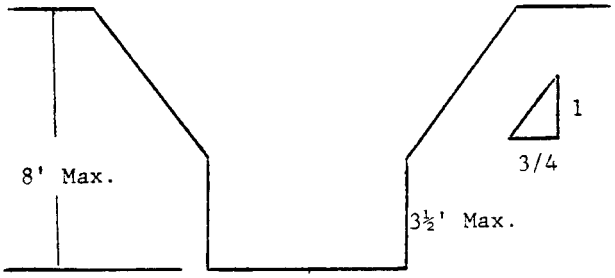

UNSUPPORTED VERTICALLY SIDED LOWER PORTION—MAXIMUM 8 FEET IN DEPTH

All excavations more than 8 feet but not more than 12 feet in depth which unsupported vertically sided lower portions shall have a maximum allowable slope of 1:1 and a maximum vertical side of 3½ feet.

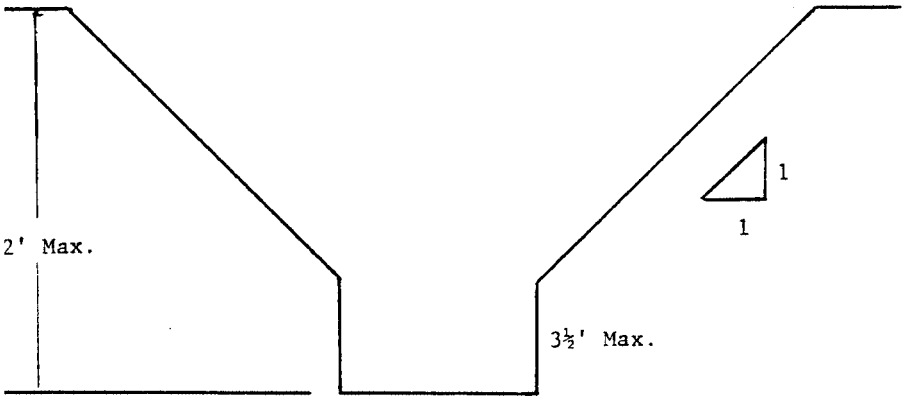

UNSUPPORTED VERTICALLY SIDED LOWER PORTION—MAXIMUM 12 FEET IN DEPTH

All excavations 20 feet or less in depth which have vertically sided lower portions that are supported or shielded shall have a maximum allowable slope of ¾:1. The support or shield system must extend at least 18 inches above the top of the vertical side.

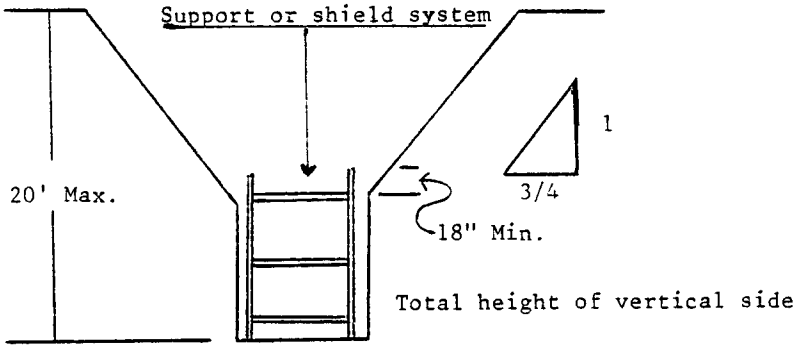

SUPPORTED OR SHIELDED VERTICALLY SIDED LOWER PORTION

4. All other simple slope, compound slope, and vertically sided lower portion excavations shall be in accordance with the other options permitted under §1926.652(b).

B–1.2 Excavations Made in Type B Soil

1. All simple slope excavations 20 feet or less in depth shall have a maximum allowable slope of 1:1.

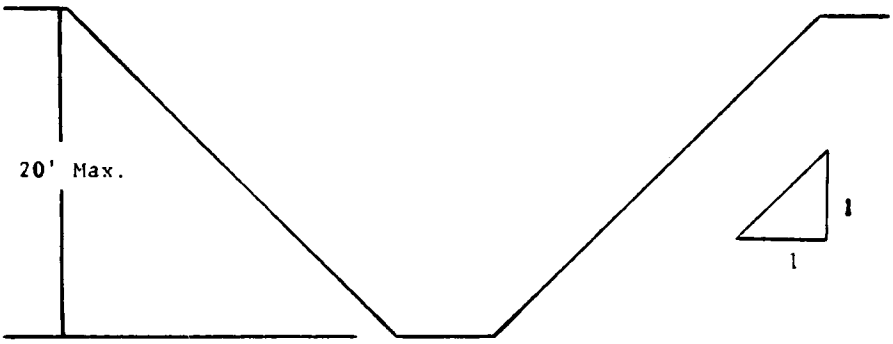

SIMPLE SLOPE

2. All benched excavations 20 feet or less in depth shall have a maximum allowable slope of 1:1 and maximum bench dimensions as follows:

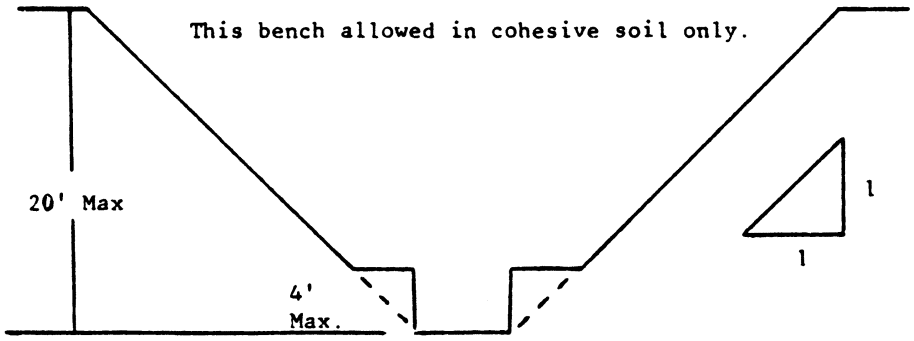

SINGLE BENCH

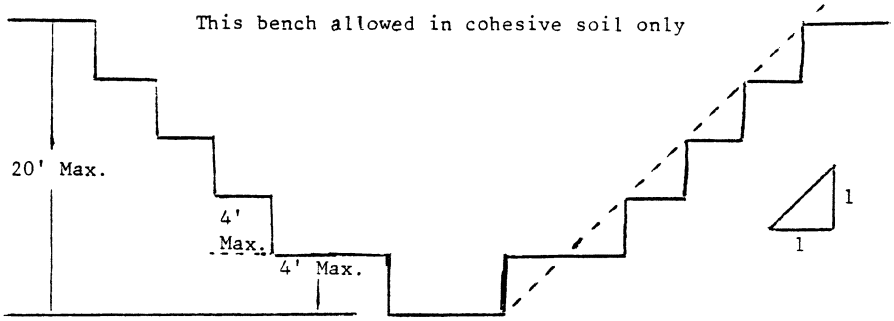

MULTIPLE BENCH

3. All excavations 20 feet or less in depth which have vertically sided lower portions shall be shielded or supported to a height at least 18 inches above the top of the vertical side. All such excavations shall have a maximum allowable slope of 1:1.

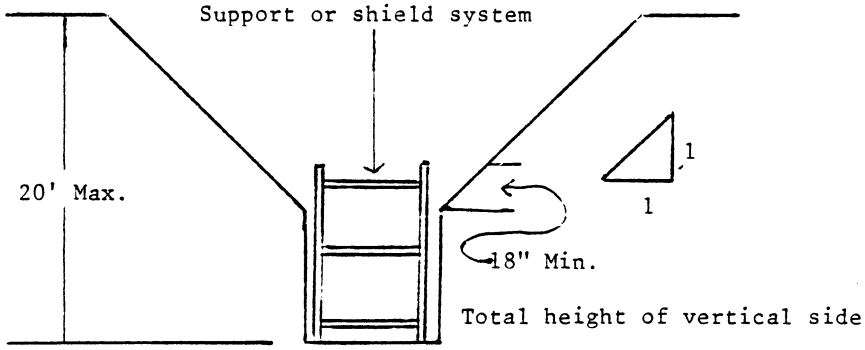

VERTICALLY SIDED LOWER PORTION

4. All other sloped excavations shall be in accordance with the other options permitted in § 1926.652(b).

B–1.3 EXCAVATIONS MADE IN TYPE C SOIL

1. All simple slope excavations 20 feet or less in depth shall have a maximum allowable slope of 1½:1.

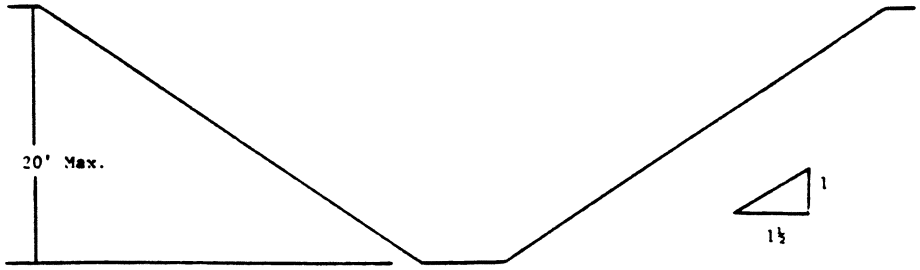

SIMPLE SLOPE

2. All excavations 20 feet or less in depth which have vertically sided lower portions shall be shielded or supported to a height at least 18 inches above the top of the vertical side. All such excavations shall have a maximum allowable slope of 1½:1.

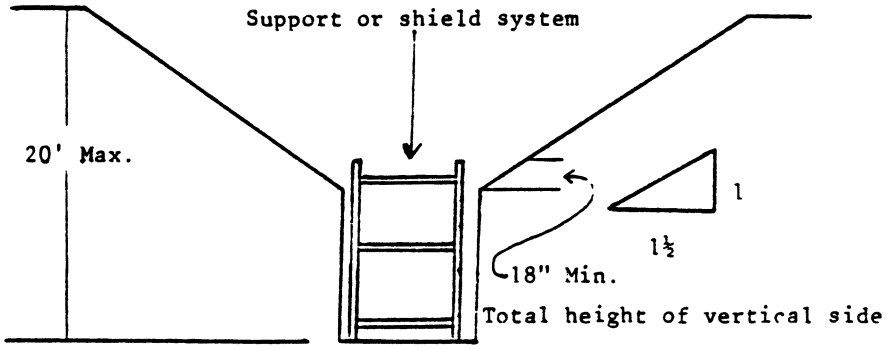

VERTICAL SIDED LOWER PORTION

3. All other sloped excavations shall be in accordance with the other options permitted in § 1926.652(b).

B–1.4 Excavations Made in Layered Soils

1. All excavations 20 feet or less in depth made in layered soils shall have a maximum allowable slope for each layer as set forth below.

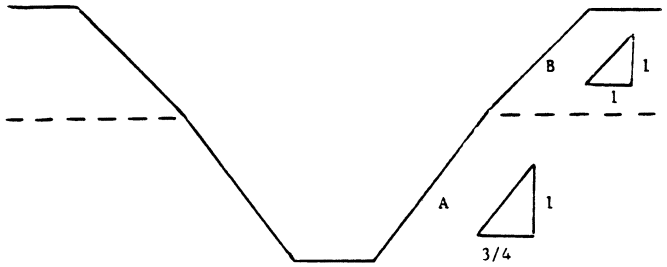

B OVER A

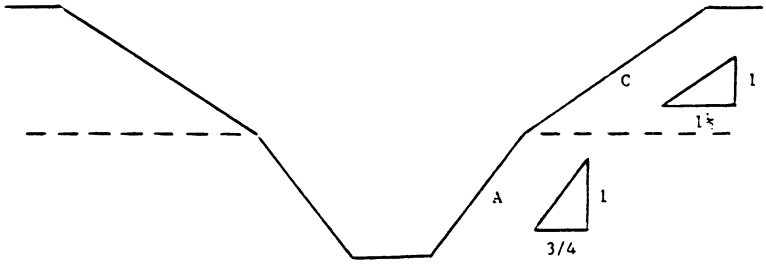

C OVER A

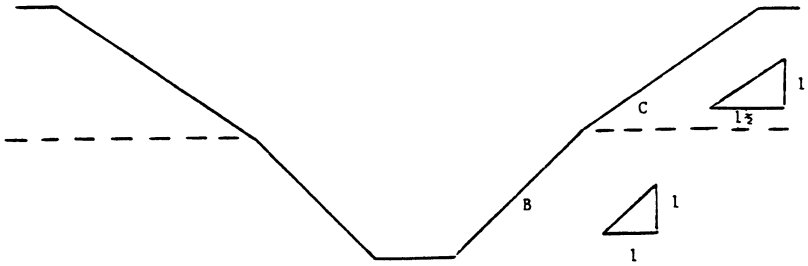

C OVER B

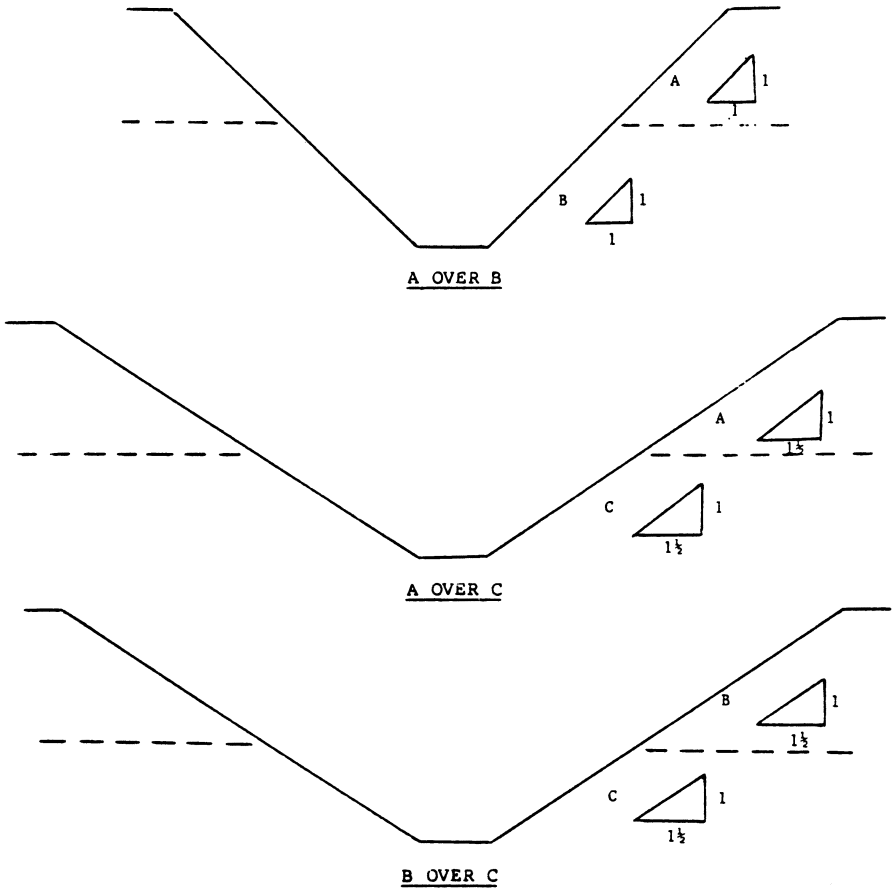

2. All other sloped excavations shall be in accordance with the other options permitted in § 1926.652(b).

APPENDIX C TO SUBPART P OF PART 1926—TIMBER SHORING FOR TRENCHES

(a) *Scope*. This appendix contains information that can be used timber shoring is provided as a method of protection from cave-ins in trenches that do not exceed 20 feet (6.1 m) in depth. This appendix must be used when design of timber shoring protective systems is to be performed in accordance with § 1926.652(c)(1). Other timber shoring configurations; other systems of support such as hydraulic and pneumatic systems; and other protective systems such as sloping, benching, shielding, and freezing systems must be designed in accordance with the requirements set forth in § 1926.652(b) and § 1926.652(c).

(b) *Soil Classification*. In order to use the data presented in this appendix, the soil type or types in which the excavation is made must first be determined using the soil classification method set forth in appendix A of subpart P of this part.

(c) *Presentation of Information*. Information is presented in several forms as follows:

(1) Information is presented in tabular form in Tables C–1.1, C–1.2, and C–1.3, and Tables C–2.1, C–2.2 and C–2.3 following paragraph (g) of the appendix. Each table presents the minimum sizes of timber members to use in a shoring system, and each table contains data only for the particular soil type in which the excavation or portion of

the excavation is made. The data are arranged to allow the user the flexibility to select from among several acceptable configurations of members based on varying the horizontal spacing of the crossbraces. Stable rock is exempt from shoring requirements and therefore, no data are presented for this condition.

(2) Information concerning the basis of the tabular data and the limitations of the data is presented in paragraph (d) of this appendix, and on the tables themselves.

(3) Information explaining the use of the tabular data is presented in paragraph (e) of this appendix.

(4) Information illustrating the use of the tabular data is presented in paragraph (f) of this appendix.

(5) Miscellaneous notations regarding Tables C–1.1 through C–1.3 and Tables C–2.1 through C–2.3 are presented in paragraph (g) of this Appendix.

(d) *Basis and limitations of the data.*—(1) *Dimensions of timber members.* (i) The sizes of the timber members listed in Tables C–1.1 through C–1.3 are taken from the National Bureau of Standards (NBS) report, ''Recommended Technical Provisions for Construction Practice in Shoring and Sloping of Trenches and Excavations.'' In addition, where NBS did not recommend specific sizes of members, member sizes are based on an analysis of the sizes required for use by existing codes and on empirical practice.

(ii) The required dimensions of the members listed in Tables C–1.1 through C–1.3 refer to actual dimensions and not nominal dimensions of the timber. Employers wanting to use nominal size shoring are directed to Tables C–2.1 through C–2.3, or have this choice under § 1926.652(c)(3), and are referred to The Corps of Engineers, The Bureau of Reclamation or data from other acceptable sources.

(2) *Limitation of application.* (i) It is not intended that the timber shoring specification apply to every situation that may be experienced in the field. These data were developed to apply to the situations that are most commonly experienced in current trenching practice. Shoring systems for use in situations that are not covered by the data in this appendix must be designed as specified in § 1926.652(c).

(ii) When any of the following conditions are present, the members specified in the tables are not considered adequate. Either an alternate timber shoring system must be designed or another type of protective system designed in accordance with § 1926.652.

(A) When loads imposed by structures or by stored material adjacent to the trench weigh in excess of the load imposed by a two-foot soil surcharge. The term ''adjacent'' as used here means the area within a horizontal distance from the edge of the trench equal to the depth of the trench.

(B) When vertical loads imposed on cross braces exceed a 240-pound gravity load distributed on a one-foot section of the center of the crossbrace.

(C) When surcharge loads are present from equipment weighing in excess of 20,000 pounds.

(D) When only the lower portion of a trench is shored and the remaining portion of the trench is sloped or benched unless: The sloped portion is sloped at an angle less steep than three horizontal to one vertical; or the members are selected from the tables for use at a depth which is determined from the top of the overall trench, and not from the toe of the sloped portion.

(e) *Use of Tables.* The members of the shoring system that are to be selected using this information are the cross braces, the uprights, and the wales, where wales are required. Minimum sizes of members are specified for use in different types of soil. There are six tables of information, two for each soil type. The soil type must first be determined in accordance with the soil classification system described in appendix A to subpart P of part 1926. Using the appropriate table, the selection of the size and spacing of the members is then made. The selection is based on the depth and width of the trench where the members are to be installed and, in most instances, the selection is also based on the horizontal spacing of the crossbraces. Instances where a choice of horizontal spacing of crossbracing is available, the horizontal spacing of the crossbraces must be chosen by the user before the size of any member can be determined. When the soil type, the width and depth of the trench, and the horizontal spacing of the crossbraces are known, the size and vertical spacing of the crossbraces, the size and vertical spacing of the wales, and the size and horizontal spacing of the uprights can be read from the appropriate table.

(f) *Examples to Illustrate the Use of Tables C–1.1 through C–1.3.*

(1) *Example 1.*

A trench dug in Type A soil is 13 feet deep and five feet wide.

From *Table C–1.1,* for acceptable arrangements of timber can be used.

Arrangement #B1

Space 4×4 crossbraces at six feet horizontally and four feet vertically.

Wales are not required.

Space 3×8 uprights at six feet horizontally. This arrangement is commonly called ''skip shoring.''

Arrangement #B2

Space 4×6 crossbraces at eight feet horizontally and four feet vertically.

Space 8×8 wales at four feet vertically.

Space 2×6 uprights at four feet horizontally.

Arrangement #B3

Space 6×6 crossbraces at 10 feet horizontally and four feet vertically.

Space 8×10 wales at four feet vertically.

Space 2×6 uprights at five feet horizontally.

Arrangement #B4

Space 6×6 crossbraces at 12 feet horizontally and four feet vertically.

Space 10×10 wales at four feet vertically.

Spaces 3×8 uprights at six feet horizontally.

(2) *Example 2.*

A trench dug in Type B soil in 13 feet deep and five feet wide. From Table C–1.2 three acceptable arrangements of members are listed.

Arrangement #B1

Space 6×6 crossbraces at six feet horizontally and five feet vertically.

Space 8×8 wales at five feet vertically.

Space 2×6 uprights at two feet horizontally.

Arrangement #B2

Space 6×8 crossbraces at eight feet horizontally and five feet vertically.

Space 10×10 wales at five feet vertically.

Space 2×6 uprights at two feet horizontally.

Arrangement #B3

Space 8×8 crossbraces at 10 feet horizontally and five feet vertically.

Space 10×12 wales at five feet vertically.

Space 2×6 uprights at two feet vertically.

(3) *Example 3.*

A trench dug in Type C soil is 13 feet deep and five feet wide.

From Table C–1.3 two acceptable arrangements of members can be used.

Arrangement #B1

Space 8×8 crossbraces at six feet horizontally and five feet vertically.

Space 10×12 wales at five feet vertically.

Position 2×6 uprights as closely together as possible.

If water must be retained use special tongue and groove uprights to form tight sheeting.

Arrangement #B2

Space 8×10 crossbraces at eight feet horizontally and five feet vertically.

Space 12×12 wales at five feet vertically.

Position 2×6 uprights in a close sheeting configuration unless water pressure must be resisted. Tight sheeting must be used where water must be retained.

(4) *Example 4.*

A trench dug in Type C soil is 20 feet deep and 11 feet wide. The size and spacing of members for the section of trench that is over 15 feet in depth is determined using Table C–1.3. Only one arrangement of members is provided.

Space 8×10 crossbraces at six feet horizontally and five feet vertically.

Space 12×12 wales at five feet vertically.

Use 3×6 tight sheeting.

Use of Tables C–2.1 through C–2.3 would follow the same procedures.

(g) *Notes for all Tables.*

1. Member sizes at spacings other than indicated are to be determined as specified in §1926.652(c), ''Design of Protective Systems.''

2. When conditions are saturated or submerged use Tight Sheeting. Tight Sheeting refers to the use of specially-edged timber planks (e.g., tongue and groove) at least three inches thick, steel sheet piling, or similar construction that when driven or placed in position provide a tight wall to resist the lateral pressure of water and to prevent the loss of backfill material. Close Sheeting refers to the placement of planks side-by-side allowing as little space as possible between them.

3. All spacing indicated is measured center to center.

4. Wales to be installed with greater dimension horizontal.

5. If the vertical distance from the center of the lowest crossbrace to the bottom of the trench exceeds two and one-half feet, uprights shall be firmly embedded or a mudsill shall be used. Where uprights are embedded, the vertical distance from the center of the lowest crossbrace to the bottom of the trench shall not exceed 36 inches. When mudsills are used, the vertical distance shall not exceed 42 inches. Mudsills are wales that are installed at the toe of the trench side.

6. Trench jacks may be used in lieu of or in combination with timber crossbraces.

7. Placement cf crossbraces. When the vertical spacing of crossbraces is four feet, place the top crossbrace no more than two feet below the top of the trench. When the vertical spacing of crossbraces is five feet, place the top crossbrace no more than 2.5 feet below the top of the trench.

TABLE C-1.1

TIMBER TRENCH SHORING -- MINIMUM TIMBER REQUIREMENTS *

SOIL TYPE A $P_a = 25 \times H + 72$ psf (2 ft Surcharge)

DEPTH OF TRENCH (FEET)	SIZE (ACTUAL) AND SPACING OF MEMBERS **													
	CROSS BRACES							WALES		UPRIGHTS				
	HORIZ. SPACING (FEET)	WIDTH OF TRENCH (FEET)					VERT. SPACING (FEET)	SIZE (IN)	VERT. SPACING (FEET)	MAXIMUM ALLOWABLE HORIZONTAL SPACING (FEET)				
		UP TO 4	UP TO 6	UP TO 9	UP TO 12	UP TO 15				CLOSE	4	5	6	8
5 TO 10	UP TO 6	4X4	4X4	4X6	6X6	6X6	4	Not Req'd	---				2X6	
	UP TO 8	4X4	4X4	4X6	6X6	6X6	4	Not Req'd	---					2X8
	UP TO 10	4X6	4X6	4X6	6X6	6X6	4	8X8	4			2X6		
	UP TO 12	4X6	4X6	6X6	6X6	6X6	4	8X8	4				2X6	
10 TO 15	UP TO 6	4X4	4X4	4X6	6X6	6X6	4	Not Req'd	---				3X8	
	UP TO 8	4X6	4X6	6X6	6X6	6X6	4	8X8	4		2X6			
	UP TO 10	6X6	6X5	6X6	6X8	6X8	4	8X10	4			2X6		
	UP TO 12	6X6	6X6	6X6	6X8	6X8	4	10X10	4				3X8	
15 TO 20	UP TO 6	6X6	6X6	6X6	6X8	6X8	4	6X8	4	3X6				
	UP TO 8	6X6	6X6	6X6	6X8	6X8	4	8X8	4	3X6				
	UP TO 10	8X8	8X8	8X8	8X8	8X10	4	8X10	4	3X6				
	UP TO 12	8X8	8X8	8X8	8X8	8X10	4	10X10	4	3X6				
OVER 20	SEE NOTE 1													

* Mixed oak or equivalent with a bending strength not less than 850 psi.
** Manufactured members of equivalent strength may by substituted for wood.

TABLE C-1.2

TIMBER TRENCH SHORING -- MINIMUM TIMBER REQUIREMENTS *

SOIL TYPE B $P_a = 45 \times H + 72$ psf (2 ft. Surcharge)

DEPTH OF TRENCH (FEET)	SIZE (ACTUAL) AND SPACING OF MEMBERS**													
	CROSS BRACES							WALES		UPRIGHTS				
	HORIZ. SPACING (FEET)	WIDTH OF TRENCH (FEET)					VERT. SPACING (FEET)	SIZE (IN)	VERT. SPACING (FEET)	MAXIMUM ALLOWABLE HORIZONTAL SPACING (FEET)				
		UP TO 4	UP TO 6	UP TO 9	UP TO 12	UP TO 15				CLOSE	2	3		
5 TO 10	UP TO 6	4X6	4X6	6X6	6X6	6X6	5	6X8	5			2X6		
	UP TO 8	6X6	6X6	6X6	6X8	6X8	5	8X10	5			2X6		
	UP TO 10	6X6	6X6	6X6	6X8	6X8	5	10X10	5			2X6		
	See Note 1													
10 TO 15	UP TO 6	6X6	6X6	6X6	6X8	6X8	5	8X8	5		2X6			
	UP TO 8	6X8	6X8	6X8	8X8	8X8	5	10X10	5		2X6			
	UP TO 10	8X8	8X8	8X8	8X8	8X10	5	10X12	5		2X6			
	See Note 1													
15 TO 20	UP TO 6	6X8	6X8	6X8	8X8	8X8	5	8X10	5	3X6				
	UP TO 8	8X8	8X8	8X8	8X8	8X10	5	10X12	5	3X6				
	UP TO 10	8X10	8X10	8X10	8X10	10X10	5	12X12	5	3X6				
	See Note 1													
OVER 20	SEE NOTE 1													

* Mixed oak or equivalent with a bending strength not less than 850 psi.
** Manufactured members of equivalent strength may by substituted for wood.

TABLE C-1.3

TIMBER TRENCH SHORING -- MINIMUM TIMBER REQUIREMENTS *

SOIL TYPE C P_a = 80 X H + 72 psf (2 ft. Surcharge)

DEPTH OF TRENCH (FEET)	SIZE (ACTUAL) AND SPACING OF MEMBERS**													
	CROSS BRACES									UPRIGHTS				
	HORIZ. SPACING (FEET)	WIDTH OF TRENCH (FEET)					VERT. SPACING (FEET)	SIZE (IN.)	VERT. SPACING (FEET)	MAXIMUM ALLOWABLE HORIZONTAL SPACING (FEET) (See Note 2)				
		UP TO 4	UP TO 6	UP TO 9	UP TO 12	UP TO 15				CLOSE				
5 TO 10	UP TO 6	6X8	6X8	6X8	8X8	8X8	5	8X10	5	2X6				
	UP TO 8	8X8	8X8	8X8	8X8	8X10	5	10X12	5	2X6				
	UP TO 10	8X10	8X10	8X10	8X10	10X10	5	12X12	5	2X6				
	See Note 1													
10 TO 15	UP TO 6	8X8	8X8	8X8	8X8	8X10	5	10X12	5	2X6				
	UP TO 8	8X10	8X10	8X10	8X10	10X10	5	12X12	5	2X6				
	See Note 1													
	See Note 1													
15 TO 20	UP TO 6	8X10	8X10	8X10	8X10	10X10	5	12X12	5	3X6				
	See Note 1													
	See Note 1													
	See Note 1													
OVER 20	SEE NOTE 1													

* Mixed Oak or equivalent with a bending strength not less than 850 psi.
** Manufactured members of equivalent strength may be substituted for wood.

TABLE C-2.1

TIMBER TRENCH SHORING -- MINIMUM TIMBER REQUIREMENTS *

SOIL TYPE A P_a = 25 X H ± 72 psf (2 ft. Surcharge)

DEPTH OF TRENCH (FEET)	SIZE (S4S) AND SPACING OF MEMBERS **													
	CROSS BRACES							WALES		UPRIGHTS				
	HORIZ. SPACING (FEET)	WIDTH OF TRENCH (FEET)					VERT. SPACING (FEET)	SIZE (IN)	VERT. SPACING (FEET)	MAXIMUM ALLOWABLE HORIZONTAL SPACING (FEET)				
		UP TO 4	UP TO 6	UP TO 9	UP TO 12	UP TO 15				CLOSE	4	5	6	8
5 TO 10	UP TO 6	4X4	4X4	4X4	4X4	4X6	4	Not Req'd	Not Req'd				4X6	
	UP TO 8	4X4	4X4	4X4	4X6	4X6	4	Not Req'd	Not Req'd					4X8
	UP TO 10	4X6	4X6	4X6	6X6	6X6	4	8X8	4			4X6		
	UP TO 12	4X6	4X6	4X6	6X6	6X6	4	8X8	4				4X6	
10 TO 15	UP TO 6	4X4	4X4	4X4	6X6	6X6	4	Not Req'd	Not Req'd				4X10	
	UP TO 8	4X6	4X6	4X6	6X6	6X6	4	6X8	4		4X6			
	UP TO 10	6X6	6X6	6X6	6X6	6X6	4	8X8	4			4X8		
	UP TO 12	6X6	6X6	6X6	6X6	6X6	4	8X10	4		4X6		4X10	
15 TO 20	UP TO 6	6X6	6X6	6X6	6X6	6X6	4	6X8	4	3X6				
	UP TO 8	6X6	6X6	6X6	6X6	6X6	4	8X8	4	3X6	4X12			
	UP TO 10	6X6	6X6	6X6	6X6	6X8	4	8X10	4	3X6				
	UP TO 12	6X6	6X6	6X6	6X8	6X8	4	8X12	4	3X6	4X12			
OVER 20	SEE NOTE 1													

* Douglas fir or equivalent with a bending strength not less than 1500 psi.
** Manufactured members of equivalent strength may be substituted for wood.

TABLE C-2.2

TIMBER TRENCH SHORING -- MINIMUM TIMBER REQUIREMENTS *

SOIL TYPE B P_a = 45 X H + 72 psf (2 ft. Surcharge)

DEPTH OF TRENCH (FEET)	SIZE (S4S) AND SPACING OF MEMBERS **													
	CROSS BRACES							WALES		UPRIGHTS				
	HORIZ. SPACING (FEET)	WIDTH OF TRENCH (FEET)					VERT. SPACING (FEET)	SIZE (IN)	VERT. SPACING (FEET)	MAXIMUM ALLOWABLE HORIZONTAL SPACING (FEET)				
		UP TO 4	UP TO 6	UP TO 9	UP TO 12	UP TO 15				CLOSE	2	3	4	6
5 TO 10	UP TO 6	4X6	4X6	4X6	6X6	6X6	5	6X8	5			3X12 4X8		4X12
	UP TO 8	4X6	4X6	6X6	6X6	6X6	5	8X8	5		3X8		4X8	
	UP TO 10	4X6	4X6	6X6	6X6	6X8	5	8X10	5			4X8		
	See Note 1													
10 TO 15	UP TO 6	6X6	6X6	6X6	6X8	6X8	5	8X8	5	3X6	4X10			
	UP TO 8	6X8	6X8	6X8	8X8	8X8	5	10X10	5	3X6	4X10			
	UP TO 10	6X8	6X8	8X8	8X8	8X8	5	10X12	5	3X6	4X10			
	See Note 1													
15 TO 20	UP TO 6	6X8	6X8	6X8	6X8	8X8	5	8X10	5	4X6				
	UP TO 8	6X8	6X8	6X8	8X8	8X8	5	10X12	5	4X6				
	UP TO 10	8X8	8X8	8X8	8X8	8X8	5	12X12	5	4X6				
	See Note 1													
OVER 20	SEE NOTE 1													

* Douglas fir or equivalent with a bending strength not less than 1500 psi.
** Manufactured members of equivalent strength may be substituted for wood.

TABLE C-2.3

TIMBER TRENCH SHORING -- MINIMUM TIMBER REQUIREMENTS *

SOIL TYPE C $P_a = 80 \times H + 72$ psf (2 ft. Surcharge)

DEPTH OF TRENCH (FEET)	SIZE (S4S) AND SPACING OF MEMBERS **													
	CROSS BRACES							WALES		UPRIGHTS				
	HORIZ. SPACING (FEET)	WIDTH OF TRENCH (FEET)					VERT. SPACING (FEET)	SIZE (IN)	VERT. SPACING (FEET)	MAXIMUM ALLOWABLE HORIZONTAL SPACING (FEET)				
		UP TO 4	UP TO 6	UP TO 9	UP TO 12	UP TO 15				CLOSE				
5 TO 10	UP TO 6	6X6	6X6	6X6	6X6	8X8	5	8X8	5	3X6				
	UP TO 8	6X6	6X6	6X6	8X8	8X8	5	10X10	5	3X6				
	UP TO 10	6X6	6X6	8X8	8X8	8X8	5	10X12	5	3X6				
	See Note 1													
10 TO 15	UP TO 6	6X8	6X8	6X8	8X8	8X8	5	10X10	5	4X6				
	UP TO 8	8X8	8X8	8X8	8X8	8X8	5	12X12	5	4X6				
	See Note 1													
	See Note 1													
15 TO 20	UP TO 6	8X8	8X8	8X8	8X10	8X10	5	10X12	5	4X6				
	See Note 1													
	See Note 1													
	See Note 1													
OVER 20	SEE NOTE 1													

* Douglas fir or equivalent with a bending strength not less than 1500 psi.
** Manufactured members of equivalent strength may be substituted for wood.

APPENDIX D TO SUBPART P OF PART 1926—ALUMINUM HYDRAULIC SHORING FOR TRENCHES

(a) *Scope.* This appendix contains information that can be used when aluminum hydraulic shoring is provided as a method of protection against cave-ins in trenches that do not exceed 20 feet (6.1m) in depth. This appendix must be used when design of the aluminum hydraulic protective system cannot be performed in accordance with §1926.652(c)(2).

(b) *Soil Classification.* In order to use data presented in this appendix, the soil type or types in which the excavation is made must

first be determined using the soil classification method set forth in appendix A of subpart P of part 1926.

(c) *Presentation of Information*. Information is presented in several forms as follows:

(1) Information is presented in tabular form in Tables D–1.1, D–1.2, D–1.3 and E–1.4. Each table presents the maximum vertical and horizontal spacings that may be used with various aluminum member sizes and various hydraulic cylinder sizes. Each table contains data only for the particular soil type in which the excavation or portion of the excavation is made. Tables D–1.1 and D–1.2 are for vertical shores in Types A and B soil. Tables D–1.3 and D1.4 are for horizontal waler systems in Types B and C soil.

(2) Information concerning the basis of the tabular data and the limitations of the data is presented in paragraph (d) of this appendix.

(3) Information explaining the use of the tabular data is presented in paragraph (e) of this appendix.

(4) Information illustrating the use of the tabular data is presented in paragraph (f) of this appendix.

(5) Miscellaneous notations (footnotes) regarding Table D–1.1 through D–1.4 are presented in paragraph (g) of this appendix.

(6) Figures, illustrating typical installations of hydraulic shoring, are included just prior to the Tables. The illustrations page is entitled ''Aluminum Hydraulic Shoring; Typical Installations.''

(d) *Basis and limitations of the data.*

(1) Vertical shore rails and horizontal wales are those that meet the Section Modulus requirements in the D–1 Tables. Aluminum material is 6061–T6 or material of equivalent strength and properties.

(2) Hydraulic cylinders specifications. (i) 2-inch cylinders shall be a minimum 2-inch inside diameter with a minimum safe working capacity of no less than 18,000 pounds axial compressive load at maximum extension. Maximum extension is to include full range of cylinder extensions as recommended by product manufaturer.

(ii) 3-inch cylinders shall be a minimum 3-inch inside diameter with a safe working capacity of not less than 30,000 pounds axial compressive load at extensions as recommended by product manufacturer.

(3) Limitation of application.

(i) It is not intended that the aluminum hydraulic specification apply to every situation that may be experienced in the field. These data were developed to apply to the situations that are most commonly experienced in current trenching practice. Shoring systems for use in situations that are not covered by the data in this appendix must be otherwise designed as specified in §1926.652(c).

(ii) When any of the following conditions are present, the members specified in the Tables are not considered adequate. In this case, an alternative aluminum hydraulic shoring system or other type of protective system must be designed in accordance with §1926.652.

(A) When vertical loads imposed on cross braces exceed a 100 Pound gravity load distributed on a one foot section of the center of the hydraulic cylinder.

(B) When surcharge loads are present from equipment weighing in excess of 20,000 pounds.

(C) When only the lower portion or a trench is shored and the remaining portion of the trench is sloped or benched unless: The sloped portion is sloped at an angle less steep than three horizontal to one vertical; or the members are selected from the tables for use at a depth which is determined from the top of the overall trench, and not from the toe of the sloped portion.

(e) *Use of Tables D–1.1, D–1.2, D–1.3 and D–1.4.* The members of the shoring system that are to be selected using this information are the hydraulic cylinders, and either the vertical shores or the horizontal wales. When a waler system is used the vertical timber sheeting to be used is also selected from these tables. The Tables D–1.1 and D–1.2 for vertical shores are used in Type A and B soils that do not require sheeting. Type B soils that may require sheeting, and Type C soils that always require sheeting are found in the horizontal wale Tables D–1.3 and D–1.4. The soil type must first be determined in accordance with the soil classification system described in appendix A to subpart P of part 1926. Using the appropriate table, the selection of the size and spacing of the members is made. The selection is based on the depth and width of the trench where the members are to be installed. In these tables the vertical spacing is held constant at four feet on center. The tables show the maximum horizontal spacing of cylinders allowed for each size of wale in the waler system tables, and in the vertical shore tables, the hydraulic cylinder horizontal spacing is the same as the vertical shore spacing.

(f) *Example to Illustrate the Use of the Tables:*

(1) Example 1:

A trench dug in Type A soil is 6 feet deep and 3 feet wide. From Table D–1.1: Find vertical shores and 2 inch diameter cylinders spaced 8 feet on center (o.c.) horizontally and 4 feet on center (o.c.) vertically. (See Figures 1 & 3 for typical installations.)

(2) Example 2:

A trench is dug in Type B soil that does not require sheeting, 13 feet deep and 5 feet wide. From Table D–1.2: Find vertical shores and 2 inch diameter cylinders spaced 6.5 feet o.c. horizontally and 4 feet o.c. vertically. (See Figures 1 & 3 for typical installations.)

(3) A trench is dug in Type B soil that does not require sheeting, but does experience some minor raveling of the trench face. The

trench is 16 feet deep and 9 feet wide. From Table D–1.2: Find vertical shores and 2 inch diameter cylinder (with special oversleeves as designated by footnote #B2) spaced 5.5 feet o.c. horizontally and 4 feet o.c. vertically, plywood (per footnote (g)(7) to the D–1 Table) should be used behind the shores. (See Figures 2 & 3 for typical installations.)

(4) Example 4: A trench is dug in previously disturbed Type B soil, with characteristics of a Type C soil, and will require sheeting. The trench is 18 feet deep and 12 feet wide. 8 foot horizontal spacing between cylinders is desired for working space. From Table D–1.3: Find horizontal wale with a section modulus of 14.0 spaced at 4 feet o.c. vertically and 3 inch diameter cylinder spaced at 9 feet maximum o.c. horizontally. 3×12 timber sheeting is required at close spacing vertically. (See Figure 4 for typical installation.)

(5) Example 5: A trench is dug in Type C soil, 9 feet deep and 4 feet wide. Horizontal cylinder spacing in excess of 6 feet is desired for working space. From Table D–1.4: Find horizontal wale with a section modulus of 7.0 and 2 inch diameter cylinders spaced at 6.5 feet o.c. horizontally. Or, find horizontal wale with a 14.0 section modulus and 3 inch diameter cylinder spaced at 10 feet o.c. horizontally. Both wales are spaced 4 feet o.c. vertically. 3×12 timber sheeting is required at close spacing vertically. (See Figure 4 for typical installation.)

(g) *Footnotes, and general notes, for Tables D–1.1, D–1.2, D–1.3, and D–1.4.*

(1) For applications other than those listed in the tables, refer to §1926.652(c)(2) for use of manufacturer's tabulated data. For trench depths in excess of 20 feet, refer to §1926.652(c)(2) and §1926.652(c)(3).

(2) 2 inch diameter cylinders, at this width, shall have structural steel tube (3.5×3.5×0.1875) oversleeves, or structural oversleeves of manufacturer's specification, extending the full, collapsed length.

(3) Hydraulic cylinders capacities. (i) 2 inch cylinders shall be a minimum 2-inch inside diameter with a safe working capacity of not less than 18,000 pounds axial compressive load at maximum extension. Maximum extension is to include full range of cylinder extensions as recommended by product manufacturer.

(ii) 3-inch cylinders shall be a minimum 3-inch inside diameter with a safe work capacity of not less than 30,000 pounds axial compressive load at maximum extension. Maximum extension is to include full range of cylinder extensions as recommended by product manufacturer.

(4) All spacing indicated is measured center to center.

(5) Vertical shoring rails shall have a minimum section modulus of 0.40 inch.

(6) When vertical shores are used, there must be a minimum of three shores spaced equally, horizontally, in a group.

(7) Plywood shall be 1.125 in. thick softwood or 0.75 inch. thick, 14 ply, arctic white birch (Finland form). Please note that plywood is not intended as a structural member, but only for prevention of local raveling (sloughing of the trench face) between shores.

(8) See appendix C for timber specifications.

(9) Wales are calculated for simple span conditions.

(10) See appendix D, item (d), for basis and limitations of the data.

ALUMINUM HYDRAULIC SHORING
TYPICAL INSTALLATIONS

FIGURE NO. 1
VERTICAL ALUMINUM HYDRAULIC SHORING (SPOT BRACING)

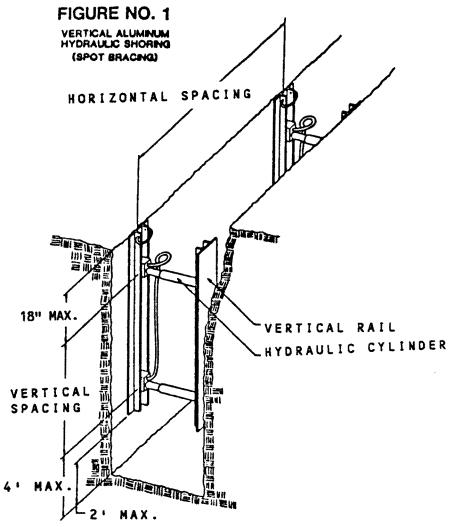

FIGURE NO. 2
VERTICAL ALUMINUM HYDRAULIC SHORING (WITH PLYWOOD)

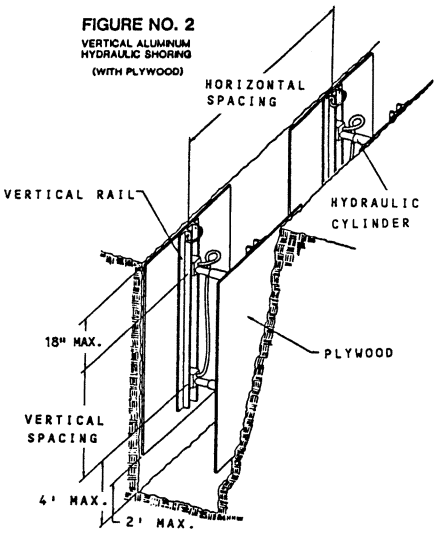

FIGURE NO. 3
VERTICAL ALUMINUM HYDRAULIC SHORING (STACKED)

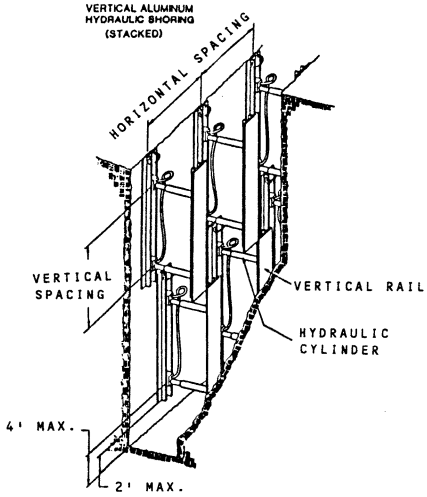

FIGURE NO. 4
ALUMINUM HYDRAULIC SHORING WALER SYSTEM (TYPICAL)

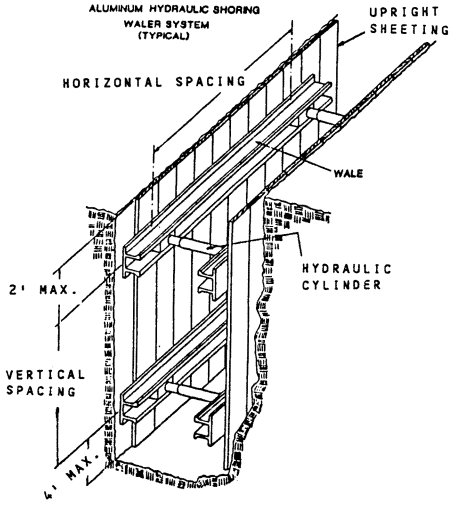

TABLE D - 1.1
ALUMINUM HYDRAULIC SHORING
VERTICAL SHORES
FOR SOIL TYPE A

DEPTH OF TRENCH (FEET)	HYDRAULIC CYLINDERS				
	MAXIMUM HORIZONTAL SPACING (FEET)	MAXIMUM VERTICAL SPACING (FEET)	WIDTH OF TRENCH (FEET)		
			UP TO 8	OVER 8 UP TO 12	OVER 12 UP TO 15
OVER 5 UP TO 10	8	4	2 INCH DIAMETER	2 INCH DIAMETER NOTE (**2**)	3 INCH DIAMETER
OVER 10 UP TO 15	8				
OVER 15 UP TO 20	7				
OVER 20	NOTE (**1**)				

Footnotes to tables, and general notes on hydraulic shoring, are found in Appendix D, Item (g)
Note (**1**): See Appendix D, Item (g) (1)
Note (**2**): See Appendix D, Item (g) (2)

TABLE D - 1.2
ALUMINUM HYDRAULIC SHORING
VERTICAL SHORES
FOR SOIL TYPE B

DEPTH OF TRENCH (FEET)	HYDRAULIC CYLINDERS				
	MAXIMUM HORIZONTAL SPACING (FEET)	MAXIMUM VERTICAL SPACING (FEET)	WIDTH OF TRENCH (FEET)		
			UP TO 8	OVER 8 UP TO 12	OVER 12 UP TO 15
OVER 5 UP TO 10	8	4	2 INCH DIAMETER	2 INCH DIAMETER NOTE (**2**)	3 INCH DIAMETER
OVER 10 UP TO 15	6.5				
OVER 15 UP TO 20	5.5				
OVER 20	NOTE (**1**)				

Footnotes to tables, and general notes on hydraulic shoring, are found in Appendix D, Item (g)
Note (**1**): See Appendix D, Item (g) (1)
Note (**2**): See Appendix D, Item (g) (2)

TABLE D - 1.3
ALUMINUM HYDRAULIC SHORING
WALER SYSTEMS
FOR SOIL TYPE B

DEPTH OF TRENCH (FEET)	WALES		HYDRAULIC CYLINDERS						TIMBER UPRIGHTS		
			WIDTH OF TRENCH (FEET)						MAX.HORIZ.SPACING (ON CENTER)		
	VERTICAL SPACING (FEET)	* SECTION MODULUS (IN^3)	UP TO 8		OVER 8 UP TO 12		OVER 12 UP TO15		SOLID SHEET	2 FT.	3 FT.
			HORIZ. SPACING	CYLINDER DIAMETER	HORIZ. SPACING	CYLINDER DIAMETER	HORIZ. SPACING	CYLINDER DIAMETER			
OVER 5 UP TO 10	4	3.5	8.0	2 IN	8.0	2 IN NOTE(2)	8.0	3 IN	—	—	3x12
		7.0	9.0	2 IN	9.0	2 IN NOTE(2)	9.0	3 IN			
		14.0	12.0	3 IN	12.0	3 IN	12.0	3 IN			
OVER 10 UP TO 15	4	3.5	6.0	2 IN	6.0	2 IN NOTE(2)	6.0	3 IN	—	3x12	—
		7.0	8.0	3 IN	8.0	3 IN	8.0	3 IN			
		14.0	10.0	3 IN	10.0	3 IN	10.0	3 IN			
OVER 15 UP TO 20	4	3.5	5.5	2 IN	5.5	2 IN NOTE(2)	5.5	3 IN	3x12	—	—
		7.0	6.0	3 IN	6.0	3 IN	6.0	3 IN			
		14.0	9.0	3 IN	9.0	3 IN	9.0	3 IN			
OVER 20	NOTE (1)										

Footnotes to tables, and general notes on hydraulic shoring, are found in Appendix D, Item (g)
Notes (**1**): See Appendix D, item (g) (1)
Notes (**2**): See Appendix D, Item (g) (2)
* Consult product manufacturer and/or qualified engineer for Section Modulus of available wales.

TABLE D - 1.4
ALUMINUM HYDRAULIC SHORING
WALER SYSTEMS
FOR SOIL TYPE C

DEPTH OF TRENCH (FEET)	WALES		HYDRAULIC CYLINDERS						TIMBER UPRIGHTS		
			WIDTH OF TRENCH (FEET)						MAX.HORIZ SPACING (ON CENTER)		
	VERTICAL SPACING (FEET)	* SECTION MODULUS (IN^3)	UP TO 8		OVER 8 UP TO 12		OVER 12 UP TO 15		SOLID SHEET	2 FT.	3 FT.
			HORIZ. SPACING	CYLINDER DIAMETER	HORIZ. SPACING	CYLINDER DIAMETER	HORIZ. SPACING	CYLINDER DIAMETER			
OVER 5 UP TO 10	4	3.5	6.0	2 IN	6.0	2 IN NOTE(2)	6.0	3 IN	3x12	—	—
		7.0	6.5	2 IN	6.5	2 IN NOTE(2)	6.5	3 IN			
		14.0	10.0	3 IN	10.0	3 IN	10.0	3 IN			
OVER 10 UP TO 15	4	3.5	4.0	2 IN	4.0	2 IN NOTE(2)	4.0	3 IN	3x12	—	—
		7.0	5.5	3 IN	5.5	3 IN	5.5	3 IN			
		14.0	8.0	3 IN	8.0	3 IN	8.0	3 IN			
OVER 15 UP TO 20	4	3.5	3.5	2 IN	3.5	2 IN NOTE(2)	3.5	3 IN	3x12	—	—
		7.0	5.0	3 IN	5.0	3 IN	5.0	3 IN			
		14.0	6.0	3 IN	6.0	3 IN	6.0	3 IN			
OVER 20	NOTE (1)										

Footnotes to tables, and general notes on hydraulic shoring, are found in Appendix D, Item (g)
Notes (**1**): See Appendix D, item (g) (1)
Notes (**2**): See Appendix D, Item (g) (2)
* Consult product manufacturer and/or qualified engineer for Section Modulus of available wales.

APPENDIX E TO SUBPART P OF PART 1926—ALTERNATIVES TO TIMBER SHORING

Figure 1. Aluminum Hydraulic Shoring

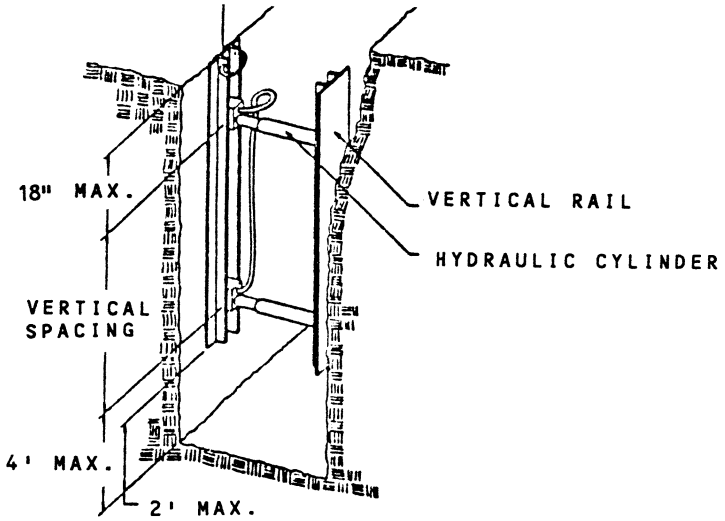

Figure 2. Pneumatic/hydraulic Shoring

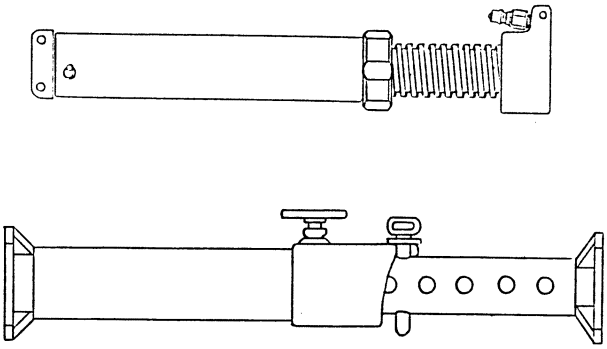

Figure 3. Trench Jacks (Screw Jacks)

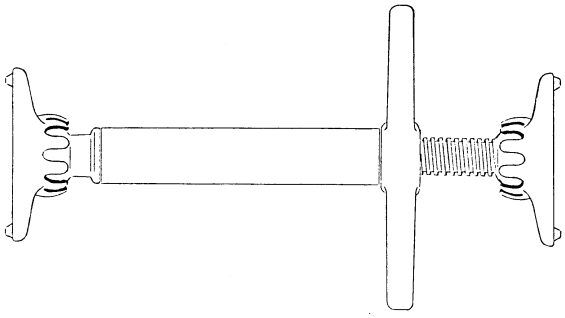

Figure 4. Trench Shields

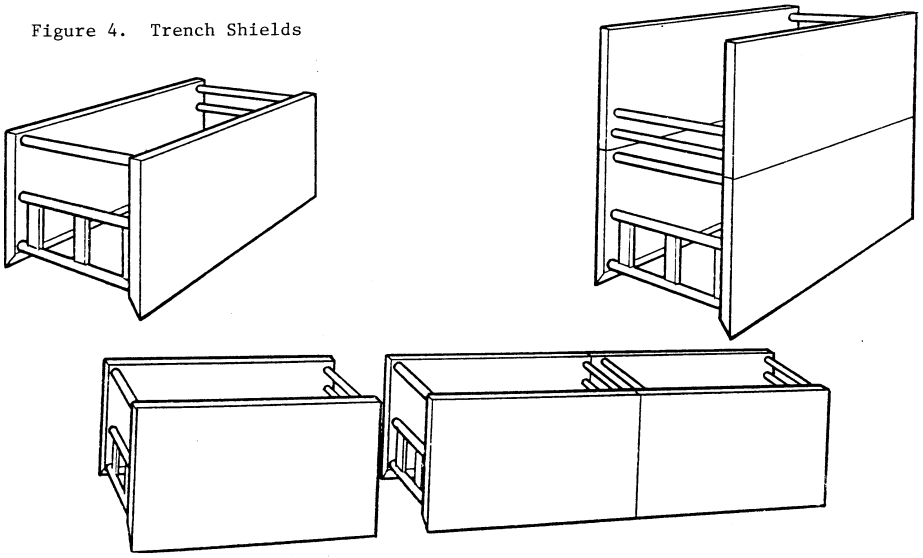

APPENDIX F TO SUBPART P OF PART 1926—SELECTION OF PROTECTIVE SYSTEMS

The following figures are a graphic summary of the requirements contained in subpart P for excavations 20 feet or less in depth. Protective systems for use in excavations more than 20 feet in depth must be designed by a registered professional engineer in accordance with §1926.652 (b) and (c).

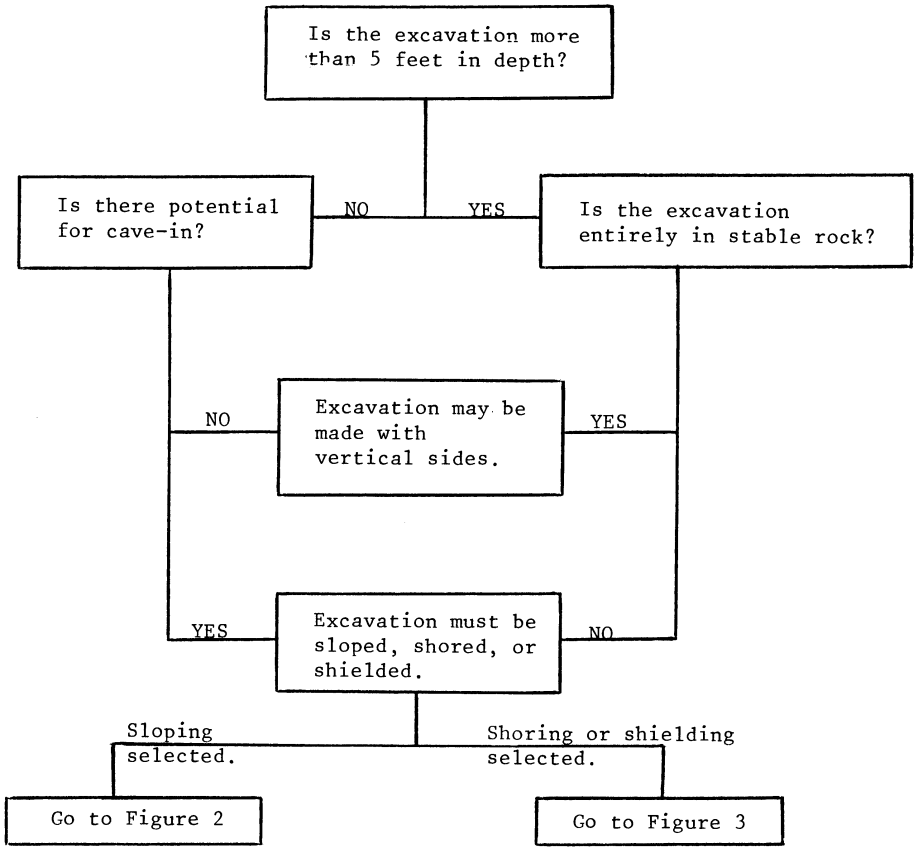

FIGURE 1 - PRELIMINARY DECISIONS

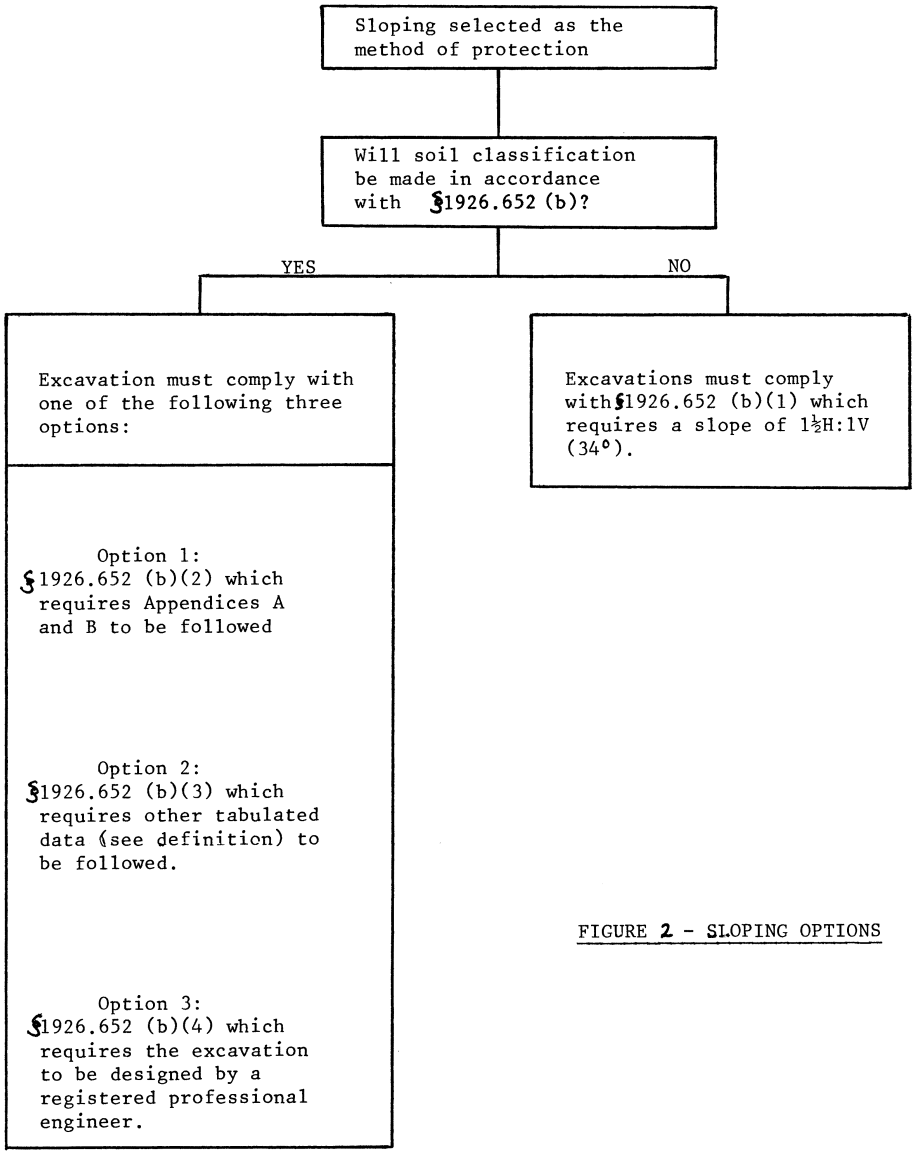

FIGURE 2 - SLOPING OPTIONS

Shoring or shielding selected as the method of protection.

Soil classification is required when shoring or shielding is used. The excavation must comply with one of the following four options:

Option 1
§1926.652 (c)(1) which requires Appendices A and C to be followed (e.g. timber shoring).

Option 2
§1926.652 (c)(2) which requires manufacturers data to be followed (e.g. hydraulic shoring,trench jacks, air shores, shields).

Option 3
§1926.652 (c)(3) which requires tabulated data (see definition) to be followed (e.g. any system as per the tabulated data).

Option 4
§1926.652 (c)(4) which requires the excavation to be designed by a registered professional engineer (e.g. any designed system).

FIGURE 3 - SHORING AND SHIELDING OPTIONS

SECTION 07 - TECHNICAL SPECIFICATIONS

ITEM 520.09000010 - SAW CUTTING ASPHALT CONCRETE

DESCRIPTION. This work shall consist of saw cutting existing asphalt concrete pavement or sidewalk at the locations indicated on the plans or where directed by the Engineer.

MATERIALS. All equipment proposed for this work shall be approved by the Engineer prior to actual use.

CONSTRUCTION DETAILS. Saw cutting shall be along a neat line as indicated on the plans or where directed by the Engineer. Saw cuts shall be made to the depth(s) indicated on the plans.

Any damage to material not indicated for removal, caused by the Contractor's operations shall be repaired by the Contractor. All repair shall be done in a manner satisfactory to the Engineer.

METHOD OF MEASUREMENT. This work will be measured by the number of linear feet of saw cutting done. No allowances will be made for saw cuts of different depths.

No saw cutting will be measured for payment under this item which the Contractor may choose to do for his own convenience.

BASIS OF PAYMENT. The unit price bid per linear foot of saw cutting shall include the cost of all labor, materials, and equipment necessary to complete the work.

Any repairs made necessary by the Contractor's operations shall be done to the satisfaction of the Engineer at no additional cost to the State.

ITEM 655.05020010 – FRAMES AND COVERS FOR SANITARY SEWER MANHOLES

DESCRIPTION:
This work shall consist of furnishing and installing frames, covers and appurtenances for sanitary sewer manholes in accordance with these specifications and details shown on the contract plans.

MATERIALS:
Materials shall conform to the following:

Cast iron for manhole frames and covers, and all special cast iron fixture entering into the construction of the work shall be made of tough, close-grained, gray iron without the admixture of any cinder iron or metal of inferior quality. Iron shall conform to ASTM Designation A48, Class 30B.

Manhole frames and covers shall be coated with coal tar epoxy of approved quality applied by the hot-dip process.

The acceptance of the frames and covers for sanitary sewer manholes will be based on the manufacturer's certification of compliance.

All manhole frames, covers and appurtenances shall be similar in detail to those existing in the adjacent area, and all elements shall be interchangeable.

The Contractor shall submit to the Engineer, with such promptness as to cause no delay in the work, or in the work of any other contractor, seven (7) copies of all shop drawings and no work shall be fabricated until the Engineer's approval has been given. All shop drawings, cuts, catalogs or other data requiring approval must be submitted to the Engineer by the Contractor and must bear his stamp of approval evidencing that the data have been checked. Drawings, cuts, catalogs or other data submitted without this stamp of approval will not be considered by the Engineer and will be returned to the Contractor. Likewise, all questions concerning the plans and specifications which require clarification or interpretation shall be submitted in writing to the Engineer through the Contractors.

The Contractor shall make any corrections in the drawings required by the Engineer and shall file with the Engineer (7) corrected copies. Approval by the Engineer of such drawings shall not relieve the Contractor from responsibility for errors of any sort in shop drawings or deviations from plans and specifications unless the Contractor, at the time of submission of said drawings, has given notice to the Engineer of any such deviations.

CONSTRUCTION DETAILS:
Construction details shall conform with the details shown on the plan and shall conform to the requirements of Subsection 655-3 in addition to the following:

3/10/09ER 12/22/08E 5/28/99 M

ITEM 655.05020010 – FRAMES AND COVERS FOR SANITARY SEWER MANHOLES

All manholes will be provided with a Type "F" Manhole Frame and Cover (Adjustable Frame). The frame cover, without the use of any filler rings, shall be set to a top frame elevation 1-9/16 inch below finished grade. At the time of final paving, the frame and cover shall be raised to the correct grade by insertion of one 1 inch and one 19/32 inch filler rings. In the event the Engineer, at any time during the Contract Period, directs the removal of either or both filler rings, the Contractor shall remove them and deliver the same to the Engineer.

METHOD OF MEASUREMENT:

The quantity to be measured under this work will be the number of frames, covers and appurtenance materials furnished and placed in accordance with the plans and specifications. The measurement shall be made for the frame containing the cover and appurtenance.

BASIS OF PAYMENT:

The unit prices bid per frame and cover shall include the cost of furnishing all labor, materials an equipment necessary to satisfactorily complete the work, including the cost of any field repair work to render the frame and cover non-rocking.

ITEM 655.16000011 - REMOVE AND DISPOSE OF FRAMES AND GRATES

DESCRIPTION:

Under this item the Contractor shall remove and dispose of the frames and grates indicated on the plans or as ordered by the Engineer.

MATERIALS:

None specified.

CONSTRUCTION DETAILS:

The Contractor shall remove and dispose of the frames and grates as indicated on the plans or ordered by the Engineer.

METHOD OF MEASUREMENT:

Measurement will be taken as the number of frames and grates removed, and disposed. A frame and grate combination shall be measured as one unit.

BASIS OF PAYMENT:

Payment will be made at the unit price bid which shall include the cost of furnishing all labor, materials, and equipment necessary to complete the work.

Rev. 10/22/02
Rev. 8/11/10

ITEM 664.40480006 - PRECAST SANITARY SEWER MANHOLE

DESCRIPTION

This specification covers the requirements for furnishing and installing precast sanitary sewer manholes as shown on the plans and in accordance with these specifications. The work shall conform to the requirements of NYSDOT Section 604 – Drainage Structures with the following modifications:

MATERIALS

Under Section 604-2.01 Drainage Structure and Manholes, **ADD** the following:

"Exterior coating for manhole shall be either Mobil Mo-Tar 4, Rust-Oleum 9300 Epoxy System or approved equal.

Precast reinforced concrete top slab and/or precast landing if required shall be manufactured in accordance with the detail shown on the contract plans. The concrete used in the manufacturing of these slabs shall be minimum 4000 psi concrete as specified under Section 706-04, "Precast Concrete Drainage Units" of the NYSDOT Standard Specifications."

Pipe Connections into the Sanitary Sewer Manholes shall be as follows

a. The precast reinforced concrete manhole base shall be provided with circular openings at the locations and elevations for the proper connection of pipes. The pipe connections shall be sealed with flexible manhole seal assemblies.

b. The flexible manhole seal assemblies shall be installed in accordance with the recommendations of the seal assembly manufacturer and shall conform to ASTM C923.

c. Flexible manhole seal assemblies shall permit at least an eight (8) degree deflection from the centerline of the opening in any direction while maintaining a watertight connection.

d. The flexible manhole seal assemblies shall be as manufactured by Interpace Corp. (Lock Joint Flexible Manhole sleeve), National Pollution Control Systems, Inc. (Kor-N-Seal) or Press-Seal Gasket Corp. or approved equal.

A cast-in-place concrete invert shall be formed within the precast concrete manhole base as shown on the contract drawings with Class A concrete.

CONSTRUCTION DETAILS

At the end of Section 604-3.02 Concrete Drainage Structure and Manholes, **ADD** the following:

Manhole Bases

For precast manhole bases, the area underneath the manhole base shall be excavated to the required elevation. The soil below the base shall not be disturbed. The manhole base shall then be lowered into the trench and checked for proper bearing on the subgrade, proper elevation and orientation to receive the incoming and outgoing sewers at the designated invert elevation. If the invert elevation varies by more than plus or minus ½ inch from the designated invert elevation, the base shall be removed and reset.

ITEM 664.40480006 - PRECAST SANITARY SEWER MANHOLE

Cast In Place Inverts

The concrete invert fill shall be installed following the connection of all sewer pipes to the manhole. The invert fill shall be true to the sewer pipe invert elevations, with smooth channels of uniform cross section and slope, either straight or with a continuous curve between inlet and outlet of pipes. The concrete invert fill shall be placed in accordance with dimensions and details shown on the Contract Plans.

To eliminate free fall conditions in a manhole resulting from invert elevation differentials between incoming and outgoing pipes, the Contractor shall form and construct suitable channels in the bottom of the manhole connecting the inverts.

The complete exterior, flow channel, and bench shall receive a prime and finish coat of the specified coating. Application shall be in strict conformance with the manufacturer's recommendations.

Masonry Collar

The precast concrete pavers or precast concrete collar be constructed on the Precast Concrete Top Slab to bring the manhole frame and cover to the proper grade in accordance with the detail on the Contract Plans. The minimum height shall be 4 inches and the maximum height shall not exceed 16 inches.

Following the placement of the pavers, a ½ inch layer of Masonry mortar shall be applied to the exterior surface of the brick and trowelled to a smooth finish.

Leakage Tests

For leakage test purposes, a section of sewer line shall be construed as being that portion of a sewer line between two (2) consecutive manholes inclusive of upstream manhole and appurtenances unless otherwise specified.

The Contractor shall be required to notify the Engineer not less than forty-eight (48) hours prior to the time he intends to begin testing at any particular location.

Prior to undertaking any repairs, the Engineer's written approval of method and material to be used in the repair shall be secured. Items which in the opinion of the Engineer cannot be repaired shall be replaced.

a. All gravity and pressure sewer lines, including but not limited to pipe, fittings, manholes, risers, stubs, specials an appurtenances shall be tested for water tightness as hereinafter specified.

b. The Contractor shall furnish all necessary material, equipment, labor and other facilities required to satisfactorily perform the tests and shall make all necessary repairs or replacements and retests as required at his own expense.

c. The Contractor is warned that the Engineer may refuse to allow exfiltration testing, or void those already underway if, in his judgment, heavy rain or rainwater inflow will distort test results. Retests of the affected lines shall be done at no cost to the County, State or other agency having jurisdiction. No claims for delays will be considered by the County, State or other agency having jurisdiction, in the event testing is suspended by the Engineer, as specified above.

d. All sewer pipes and manholes must be clean prior to any work described in this section. They shall be free from dirt, debris, sand, stones, etc. and accumulated water must be removed.

e. The testing of new manholes will be performed using the water exfiltration test or air test. Air pressure testing on manholes shall be done in accordance with ASTM C1244. This specification describes the testing process for an exfiltration test.

f. Prior to the exfiltration test, all pipes in the new manhole to be tested shall be plugged. All plugs shall be installed in the presence of the Engineer or his representative. Each new manhole shall be filled with water to a level not less than 4 feet above the exterior crown of the upstream pipe or above the normal groundwater level whichever is higher.

g. A twenty four (24) hour stabilization period will be required prior to taking measurements. Should the water level during the stabilization period drop below the test level as specified above, the Contractor, in the presence of the Engineer or his representative shall add make-up water for water lost during the stabilization period to increase the water level to the required height for the test.

h. The actual test period shall begin following the stabilization period. Addition of make-up water will not be allowed once the test has begun. *Any deviation* from the aforementioned will *void* the test.

i. The test shall be conducted for a period of at least two (2) hours. The Engineer or his representative will take three (3) readings of the water level at the beginning of the test period, and another three (3) readings of the water level at the end of the test period. The average of the readings will be used by the Engineer to calculate the leakage quantity.

j. The maximum allowable quantity of exfiltration from any manhole under test shall not exceed 0.25 gallons per foot diameter of manhole per foot of water depth measured from the invert of the downstream pipe per twenty-four (24) hours.

Prior to making any repairs, the Contractor shall submit to the Engineer, in writing, the proposed method of repair and secure his written approval of methods and material to be incorporated in the repair. The Engineer shall be the sole judge as to whether the pipes or manholes shall be repaired or replaced.

All repairs and retesting must be made in the presence of a representative of the Engineer and to the satisfaction of the Engineer.

Should a section or sections of pipe, or manholes fail to meet the leakage criteria, the Contractor shall at no cost to the County, State, or other agency having jurisdiction, locate the leaks and repair pipe and manholes, as necessary, until the leakage is within the permitted allowance.

Regardless of the results of the infiltration test, it is required that all visible leaks be repaired.

The injection of gel, sealant, or any other product to seal cracks, porous section, or any other structural defect of the pipe or manhole will not be permitted.

All tests and repairs shall be repeated as many times as necessary, at no cost to the County,

ITEM 664.40480006 - PRECAST SANITARY SEWER MANHOLE

State or other agency having jurisdiction, until the requirements hereinbefore specified have been met.

METHOD OF MEASUREMENT

The quantity to be measured under this item will be the number of linear feet of height, measured to the nearest ¼ foot, from the bottom of the manhole base to the top of the masonry collar.

BASIS OF PAYMENT

The unit price bid per linear foot shall include the cost of all labor, equipment, and materials necessary to complete the work including flexible gaskets between manhole sections, concrete invert fill, precast top slab and landings, and all necessary testing and any repairs to the manhole required in connection with the sewerage tests on the manhole.

Manhole frames and covers will be paid for under separate items.

Excavation (dewatering included in Excavation), backfill, select fill, geotextile and any necessary sheeting will be paid for under separate items.

Payment will be made under:

Item No.	Description	Pay Unit
664.40480006	Precast Sanitary Sewer Manhole (48 inch DIA.)	Linear Foot
664.40600006	Precast Sanitary Sewer Manhole (60 inch DIA.)	Linear Foot
664.40720006	Precast Sanitary Sewer Manhole (72 inch DIA.)	Linear Foot
664.40840006	Precast Sanitary Sewer Manhole (84 inch DIA.)	Linear Foot
664.40960006	Precast Sanitary Sewer Manhole (96 inch DIA.)	Linear Foot

ITEM 26 - SANITARY SEWER LATERAL REPLACEMENT

1. Description:

The work covered under this item of the specifications consists of furnishing all plant, labor, equipment, appliances, and materials and performing all operations in connection with the relocation or replacement of sanitary sewer laterals complete, in strict accordance with this section of the specifications and the applicable drawings and subject to the terms and conditions of the Contract. The work includes the materials of construction, pipe, jointing materials and fittings, the placing of the material, embedding of the pipe, bracing of existing structure, testing, and all operations which are necessary to complete the work. Sanitary sewer laterals to be replaced shall be constructed with pipe of the same size as the existing lateral unless otherwise ordered by the Engineer.

2. Materials:

Cast iron pipe shall be extra heavy soil pipe. The pipe shall comply with all requirements of the ASTM Specifications, Designation A74, year of latest revision. Joints shall be 'O' ring type, unless approved otherwise by the Engineer.

Vitrified clay pipe shall conform to the standard specifications for Extra Strength Clay Pipe, ASTM Designation C700, year of latest revision. Pipe shall have joints meeting ASTM Specification C425, year of latest revision and approved by the Engineer.

Polyvinyl chloride pipe shall conform to the requirements of ASTM Specification D3034, PSM-SDR 35, year of latest revision. The pipe shall be made from PVC compounds as defined and described in ASTM Specification D1784, Cell Classification 12454B, year of latest revision. PVC pipe shall have push-on joints with elastomeric gaskets. All adaptors from PVC sewer pipe to laterals of other materials shall be standard manufactured fittings which provide a watertight joint.

Other pipe materials must be approved by the Engineer before they may be utilized.

3. Construction Details:

Existing sanitary sewer laterals shall be replaced where encountered in the construction of the proposed pipe lines or structures.

The pipe installations shall be started at the sewer trunk line and shall be placed up-grade.

The pipe shall be accurately set to line and grade so that the invert will be smooth and uniform.

The pipe shall not be laid on frozen ground.

Pipe which is not true in alignment, or which shows any settlement after laying, shall be taken up and relaid without extra compensation.

Excavation and backfilling for all types of laterals shall be in accordance with the section "Trench Excavation and Backfilling". Material to be excavated shall be as defined under Unclassified Trench Excavation.

The relocated lateral shall be connected to the existing or new wye or tee, laid on a grade of 1/4 inch per foot and not less than 1/8 inch per foot and routed by way of 1/8 bends and joined to the existing house lateral.

The existing lateral stub to the existing sanitary sewer shall be plugged watertight when a new sanitary sewer wye or tee is installed to intercept the existing lateral.

When directed by the Engineer, the relocated lateral shall be tested in accordance with the section "Polyvinyl Chloride Sanitary Sewer".

DOC26

ITEM 27 - POLYVINYL CHLORIDE SANITARY SEWER

1. Description:

Under this item the Contractor shall furnish and place polyvinyl chloride (PVC) sanitary sewer pipe of the size shown on the plans and in the itemized proposal, or as ordered by the Engineer.

2. Materials:

All PVC pipe and fittings where specified shall be made from PVC compounds as defined and described in ASTM D1784, Cell Classification 12454B. PVC pipe and fittings shall conform to the requirements of ASTM D3034 PSM-SDR 35. PVC pipe and fittings shall have push-on joints with elastomeric gaskets conforming to ASTM D3212. Connections of PVC pipe to cast in place manholes shall be made using approved manhole couplings. (Cost to be included in price bid for manholes.)

3. Construction Details:

Pipe shall be placed in accordance with these specifications, the plans and applicable standard sheets.

The Contractor shall provide the necessary lines and supports to insure installation of the pipe to line and grade as indicated on the plans. The Contractor's methods for lowering the pipe into the trench shall be such that neither the pipe nor the trench will be damaged or disturbed.

The Engineer may inspect all pipe before it is laid and reject any section that is damaged by handling or is found to be defective in any respect.

The pipe installation shall be started at the lowest point and shall be placed upgrade.

The pipe shall be accurately set to line and grade and shall have a full, firm and even bearing. The invert will be smooth and uniform.

Pipe shall not be laid on frozen ground.

Pipe which is not true in vertical or horizontal alignment or which shows any settlement after laying, shall be taken up and relaid without extra compensation.

Excavation, bedding and backfilling shall be in accordance with their respective items.

Backfilling around pipe shall be accomplished such that deformation is kept to a minimum. This can be done by backfilling and compacting both sides of the pipe equally before compacting over top of the pipe.

All joints shall be assembled in accordance with the pipe manufacturer's instructions and recommendations as interpreted by the Engineer.

Lubricants, where required for joints, shall be the type and make recommended by the pipe manufacturer.

The pipe shall be cut to the configuration of the new or existing structure to which it is connected as shown on the details and/or as approved by the Engineer. All cuts shall be saw cut or snap cut.

Joints for PVC pipe shall be integral bell and beveled spigot ends sealed with an elastomeric gasket.

The Contractor shall connect the new sewers to the existing or proposed structures, as shown on the drawings or as directed by the Engineer.

After the backfill is completed the Contractor shall dispose of all surplus material, dirt, and rubbish from the site. Surplus dirt may be deposited in embankment or as ordered by the Engineer. The Contractor shall restore all disturbed areas to their original condition. After all work is completed, the Contractor shall remove all tools and other equipment used by him, leaving the entire site free, clear, and in good condition.

Cleaning and restoration of site is not payable directly, but shall be considered as a subsidiary obligation of the Contractor, covered under the general cost of the work.

4. Tests:

All sewer lines shall be subjected to the following tests in the presence of the Engineer:

A. A lamp light shall be clearly visible between manholes.

B. A ball 2 inches smaller in diameter than the pipe shall roll freely of its own accord between manholes (on grades less than 1.5 percent water may be used to assist the progress of the ball).

C. The initial section (MH to MH) minimum 100 feet of sewer construction shall be tested for leakage prior to backfilling before the Contractor will be allowed to continue laying additional sewer pipe. Other leakage tests shall be made as directed by the Engineer. All sewers shall be tested for watertightness and shall meet the requirements set forth below before final acceptance of the work of the Contract. The Contractor shall furnish all necessary appliances and make the tests at his own expense.

Exfiltration Test:

Tests shall be made by filling the sewer with water and measuring the quantity of leakage from the sewer. The head of water during the test shall be maintained at least two (2) feet above the highest section of the work being tested.

Where work being tested has been constructed in water bearing soils, leakage tests may, at the discretion of the Engineer, be made by measuring the quantity of infiltration into the sewer or structure.

The allowable leakage or infiltration per 6 hours per inch of diameter per 1000 feet of sewer tested shall not exceed 4 gallons. Localized or spurting leaks of any volume detected in sewers shall be permanently stopped.

Manholes shall be tested individually by filling with water. The allowable drop in the water surface of the manhole shall not exceed 0.01 feet per foot of diameter per foot of vertical depth of manhole per hour.

The Contractor, at his option, may test the entire sewer line by the low pressure air method in lieu of the hydrostatic testing.

Low Pressure Air Acceptance Test:

All branch fittings shall be securely plugged to withstand the internal test pressures. The section of line being tested shall also be securely plugged at each manhole. All stoppers shall be adequately braced when required.

Air shall be slowly supplied to the plugged pipe line until the internal air pressure reached 4.0 pounds per square inch greater than the average back pressure of any ground water that may submerge the pipe. At least two (2) minutes shall be allowed for temperature stabilization before proceeding further.

TABLE II

MINIMUM SPECIFIED TIME REQUIRED FOR A 0.5 PSIG PRESSURE DROP FOR SIZE AND LENGTH OF PIPE INDICATED FOR Q = 0.0015

1 Pipe Diameter (in.)	2 Minimum Time (min: sec)	3 Length for Minimum Time (ft)	4 Time for Longer Length (sec)	Specification Time for Length (L) Shown (min:sec)							
				100 ft	150 ft	200 ft	250 ft	300 ft	350 ft	400 ft	450 ft
4	1:53	597	.190 L	1:53	1:53	1:53	1:53	1:53	1:53	1:53	1:53
6	2:50	398	.427 L	2:50	2:50	2:50	2:50	2:50	2:50	2:51	3:12
8	3:47	298	.760 L	3:47	3:47	3:47	3:47	3:48	4:26	5:04	5:42
10	4:43	239	1.187 L	4:43	4:43	4:43	4:57	5:56	6:55	7:54	8:54
12	5:40	199	1.709 L	5:40	5:40	5:42	7:08	8:33	9:58	11:24	12:50
15	7.05	159	2.671 L	7:05	7:05	8:54	11:08	13:21	15:35	17:48	20:02
18	8:30	133	3.846 L	8:30	9:37	12:49	16:01	19:14	22:26	25:38	28:51
21	9:55	114	5.235 L	9:55	13:05	17:27	21:49	26:11	30:32	34:54	39:16
24	11:20	99	6.837 L	11:24	17:57	22:48	28:30	34:11	39:53	45:35	51:17
27	12:45	88	8.653 L	14:25	21:38	28:51	36:04	43:16	50:30	57:42	46:54
30	14:10	80	10.683 L	17:48	26:43	35:37	44:31	53:25	62:19	71:13	80:07
33	15:35	72	12.926 L	21:33	32:19	43:56	53:52	64:38	75:24	86:10	96:57
36	17:00	66	15.384 L	25:39	38:28	51:17	64:06	76:55	89:44	102:34	115:23

The pressure shall then be allowed to decrease to 3.5 psi at which time a stop watch shall be started. At the end of the holding time shown in the preceding air test table the pressure drop shall be recorded. The pipe line shall be considered acceptable if the pressure has not dropped below 2.5 psi.

Should any leaks, defective joints or defective construction be found, they shall be promptly made good, and should any defective pipes or fittings be discovered, they shall be removed and replaced with sound pipes or fittings in a satisfactory manner and without additional compensation.

5. Inspection:

Prior to final approval of the sanitary sewer system the Engineer, accompanied by the Contractors Representative, will make a thorough inspection, by an appropriate method, of the entire installation. Any indication of defects in material or workmanship or obstruction to flow in the pipe system shall be further investigated and corrected as necessary. Defects due to the Contractors' negligence shall be corrected by the Contractor without additional compensation, and as directed by the Engineer.

DOC27