Banzhoff Tract

Tax Parcel ID 42-11-0276-030

Preliminary Subdivision and Land Development Plan

November 27, 2012
Revised January 3, 2014
Revised March 3, 2014
Revised April 30, 2014
Revised June 2, 2014
Revised May 28, 2021
Revised June 11, 2021
Revised July 27, 2021

Submitted to:
Upper Allen Township
100 Gettysburg Pike
Mechanicsburg, PA 17055
(717) 766-0756

Submitted by:
Estate of Martha Joan Banzhoff,
c/o Harry G. Banzhoff, Executor
2308 Stumpstown Road Mechanicsburg,
PA 17055
(717) 691-5572

Sheet Index

No.	Title
C-1.0	Cover Sheet and Signatures
C-1.1	Overall Lot Layout and Site Data
C-1.2	Phasing Plan
C-2.0	Overall Site Plat and Tables
C-2.1	Plat and Plan - Sheet 1 of 3
C-2.2	Plat and Plan - Sheet 2 of 3
C-2.3	Plat and Plan - Sheet 3 of 3
C-3.0	Overall Existing Conditions
C-3.1	Existing Conditions Plan - Sheet 1 of 3
C-3.2	Existing Conditions Plan - Sheet 2 of 3
C-3.3	Existing Conditions Plan - Sheet 3 of 3
C-4.1	Erosion and Sedimentation Control Plan (E&SC 1 of 3)
C-4.2	Erosion and Sedimentation Control Plan (E&SC 2 of 3)
C-4.3	Erosion and Sedimentation Control Plan (E&SC 3 of 3)
C-4.4	Erosion and Sedimentation Control Details
C-4.5	Erosion and Sedimentation Control Details
C-4.6	Erosion and Sedimentation Control Details
C-5.1	Post Construction Stormwater Management Plan (PCSM 1 of 3)
C-5.2	Post Construction Stormwater Management Plan (PCSM 2 of 3)
C-5.3	Post Construction Stormwater Management Plan (PCSM 3 of 3)
C-5.4	Post Construction Stormwater Management Details
C-5.5	Post Construction Stormwater Management Details
C-5.6	Post Construction Stormwater Management Details
C-5.7	Post Construction Stormwater Management Details
C-6.1	Entrance Drive and Townhouse North Plans and Profiles
C-6.2	East Loop Road Plan and Profile
C-6.3	West Loop Road Plan and Profile
C-6.4	Townhouse South and HW-F4 to Outfall F Plans and Profiles
C-6.5	Lower Entrance Road Plan and Profile
C-6.6	Grantham Road and Offroad Storm Plans and Profiles
C-6.7	Offroad Storm Plans and Profiles
C-7.1	General Details
L-1.0	Overall Landscape and Lighting Plan
L-1.1	Landscape and Lighting Plan (1 of 2)
L-1.2	Landscape and Lighting Plan (2 of 2)
S-1.1	Sanitary Sewer Details (1 of 4)
S-1.2	Sanitary Sewer Details (2 of 4)
S-1.3	Sanitary Sewer Details (3 of 4)
S-1.4	Sanitary Sewer Details (4 of 4)

APPROVALS

THIS PLAN APPROVED BY THE UPPER ALLEN TWP. ENGINEER

THIS_____DAY OF_____20___

_____
TOWNSHIP ENGINEER

THIS PLAN APPROVED BY THE BOARD OF COMMISSIONERS OF UPPER ALLEN TOWNSHIP

THIS_____DAY OF_____20___

_____
PRESIDENT

_____
SECRETARY

RECORDED IN THE OFFICE OF THE RECORDER OF DEEDS IN AND FOR CUMBERLAND COUNTY, PENNSYLVANIA, IN SUBDIVISION

PLAN BOOK_____VOLUME_____PAGE_____

WITNESS MY HAND AND SEAL OF OFFICE

THIS_____DAY OF_____20___

_____
RECORDER

THIS PLAN RECOMMENDED FOR APPROVAL BY THE UPPER ALLEN TOWNSHIP PLANNING COMMISSION

THIS_____DAY OF_____20___

_____
CHAIRMAN

_____
SECRETARY

REVIEWED BY THE CUMBERLAND COUNTY PLANNING DEPARTMENT
THIS _____ DAY OF _____20_____

_____
DIRECTOR OF PLANNING

RECORDING

RECORDED IN THE OFFICE OF THE RECORDER OF DEEDS IN AND FOR CUMBERLAND COUNTY, PENNSYLVANIA, IN SUBDIVISION

PLAN BOOK_____VOLUME_____PAGE_____

WITNESS MY HAND AND SEAL OF OFFICE

THIS_____DAY OF_____20___

_____
RECORDER

CERTIFICATIONS

I, JOHN MELHAM, ON THIS DATE, _____
HAVE REVIEWED AND HEREBY CERTIFY THAT THE SWM SITE PLAN MEETS ALL DESIGN STANDARDS AND CRITERIA OF THE UPPER ALLEN TOWNSHIP STORMWATER MANAGEMENT ORDINANCE.

_____
JOHN MELHAM, RLA DATE
MELHAM ASSOCIATES, PC
2247 NORTH FRONT STREET, HARRISBURG, PA. 17110
TEL: (717) 238-5000

I HEREBY CERTIFY THAT, TO THE BEST OF MY KNOWLEDGE, THE SURVEY PLAN SHOWN AND DESCRIBED HEREON IS TRUE AND CORRECT TO THE ACCURACY REQUIRED BY THE UPPER ALLEN TOWNSHIP SUBDIVISION AND LAND DEVELOPMENT ORDINANCE.

_____
ANTHONY STACKPOLE TROST DATE
PLS # 055509-E
MELHAM ASSOCIATES, PC
2247 NORTH FRONT STREET, HARRISBURG, PA. 17110
TEL: (717) 238-5000

THIS SITE HAS BEEN INVESTIGATED FOR WETLAND AREAS AND TO THE BEST OF MY KNOWLEDGE, ALL WETLAND AREAS ARE SHOWN ON THIS PLAN.

_____ 2/1/12
ENVIRONMENTAL SPECIALIST DATE

OWNER SIGNATURES

IT IS ACKNOWLEDGED THAT THE STORMWATER MANAGEMENT FACILITIES AND BMPS ARE PERMANENT FIXTURES THAT CAN BE ALTERED OR REMOVED ONLY AFTER APPROVAL OF A REVISED PLAN BY THE MUNICIPALITY.

_____
OWNER(S)

Estate of Martha Joan Banzhoff,
c/o Harry G. Banzhoff, Executor
2308 Stumpstown Road
Mechanicsburg, PA 17055
(717) 691-5572

IT IS HEREBY CERTIFIED THAT THE UNDERSIGNED IS THE LEGAL OWNER OF THE PROPERTY SHOWN ON THIS PLAT AND THAT THE AREAS SHOWN FOR DEDICATION ALONG PUBLIC STREETS OR PARTS THEREOF, ARE HEREBY TENDERED FOR DEDICATION TO PUBLIC USE.

_____
OWNER(S)

Estate of Martha Joan Banzhoff,
c/o Harry G. Banzhoff, Executor
2308 Stumpstown Road
Mechanicsburg, PA 17055
(717) 691-5572

COMMONWEALTH OF PENNSYLVANIA
COUNTY OF CUMBERLAND

ON THIS THE_____DAY OF_____, 2021

BEFORE ME UNDERSIGNED PERSONALLY APPEARED

OWNER(S) _____

WHO BEING DULY SWORN ACCORDING TO LAW, DEPOSE AND SAY THAT HE/SHE IS THE OWNER OF THE PROPERTY SHOWN ON THIS PLAN AND THAT HE/SHE ACKNOWLEDGES THE SAME TO BE HIS/HER ACT AND DEED AND DESIRES THE SAME TO RECORDED AS SUCH ACCORDING TO LAW.

WITNESS MY HAND AND NOTARIAL SEAL THE DAY AND DATE ABOVE WRITTEN.

_____
NOTARY PUBLIC

MY COMMISSION EXPIRES

THE_____DAY OF_____20___

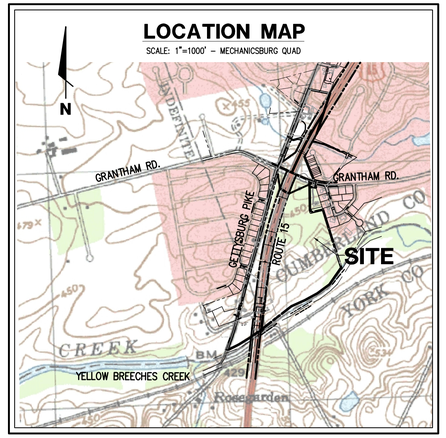

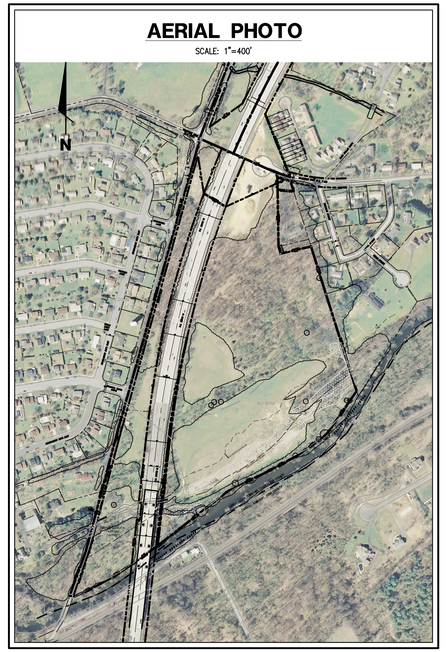

UTILITY CONTACTS

NATURAL GAS
UGI UTILITIES, INC.
15TH AND PAXTON STREETS
HARRISBURG, PA 17104
(717) 234-5951
CONTACT: JOHN MURRAY

ELECTRICITY
PPL UTILITIES
100 COMMERCE DRIVE
MECHANICSBURG, PA 17050-2675
(717) 691-2935
CONTACT: ERIC KLEIN

METROPOLITAN EDISON CO./FIRSTENERGY
100 COMMERCE DRIVE
MECHANICSBURG, PA 17050-2675
(717) 691-2935
CONTACT: ERIC KLEIN

CABLE
COMCAST CABLE
4601 SMITH STREET
HARRISBURG, PA 17109
(717) 651-1913
CONTACT: DAVID McLUCKIE

TELEPHONE
VERIZON
11TH FLOOR STRAWBERRY SQUARE
HARRISBURG, PA 17101
(717) 777-5162
CONTACT: BILL SHEPLER

SPRINT/NEXTEL
4464 LINCOLN HIGHWAY
YORK, PA 17406-8151
(856) 577-3950
CONTACT: STEVE GARNETT

WATER
UNITED WATER PA
317 NORTH MARKET STREET
MECHANICSBURG, PA 17055
(717) 564-3662
CONTACT: DENNIS RUDISILL

SEWER
UPPER ALLEN TOWNSHIP
100 GETTYSBURG PIKE
MECHANICSBURG, PA 17055
(717) 766-0756
CONTACT: BARRY CUPP

811 Know what's below. Call before you dig.

NOTE: ALL UNDERGROUND UTILITIES SHOWN ON THIS PLAN ARE A COMPILATION OF ACTUAL FIELD SURVEYS AND DATA FURNISHED BY OTHERS. MELHAM ASSOCIATES ASSUMES NO RESPONSIBILITY FOR THE LOCATION OF ANY UNDERGROUND UTILITY AS SHOWN ON THIS DRAWING. THE CONTRACTOR SHOULD VERIFY THE LOCATION OF ALL UTILITIES PRIOR TO CONSTRUCTION. FOR INFORMATION CONCERNING UNDERGROUND UTILITIES CALL 811

ONE CALL SERIAL NUMBER: 20112701937

architecture
engineering
landscape architecture
planning
surveying

melham ASSOCIATES, PC

2247 North Front Street
Harrisburg, PA 17110

tel 717 238 5000

fax 717 236 2600
www.melham.com

CLIENT

Estate of
Martha Joan Banzhoff
c/o Harry G. Banzhoff,
Executor

2308 STUMPSTOWN ROAD
MECHANICSBURG, PA 17055
(717) 691-5572

PROJECT

Banzhoff Tract

UPPER ALLEN TOWNSHIP, CUMBERLAND COUNTY, PA

PHASE

PRELIMINARY

DRAWING

COVER SHEET

© 2021 MELHAM ASSOCIATES PC

SCALE

AS SHOWN

JOB #

7680

CADD

7680C-1.dwg

DATE

7/27/21

SHEET

C-1.0

Jul 27, 2021 - 2:47pm D:\7600\7680\planset\PreLimsj7680C-1.dwg

EXISTING LOT INFORMATION

LOT#	SQUARE FOOTAGE	ACREAGE	EXISTING LOT USE	OWNERSHIP	TRACT	DEED BOOK	DATE
1	1,213,930.21 SF	27.868 AC	VACANT LOT	BANZHOFF	42-11-0276-030	DEED BOOK Q PAGE 993	6-9-1970
2	348,712.44 SF	8.005 AC	RESIDENCE	BANZHOFF	42-11-0276-030	DEED BOOK Q PAGE 994	6-9-1970
3	274,241.27 SF	6.295 AC	VACANT/R.O.W.	BANZHOFF/PENNDOT R.O.W.	N/A	DEED BOOK R23 PAGE 1	6-5-1970
4	98,072.55 SF	2.251 AC	VACANT/R.O.W.	BANZHOFF/PENNDOT R.O.W.	N/A	DEED BOOK R23 PAGE 1	6-5-1970
5	4750.11 SF	0.109 AC	VACANT/R.O.W.	BANZHOFF/PENNDOT R.O.W.	N/A	N/A	N/A
TOTAL	1,939,706.60 SF	44.529 AC					

PROPOSED LOT INFORMATION

LOT#	SQUARE FOOTAGE	ACREAGE	TYPE	OWNERSHIP	LOT#	SQUARE FOOTAGE	ACREAGE
1A	166,966.57 SF	3.833 AC	NON-BUILDING LOT	OPEN SPACE / H.O.A.	1A	728,174.79 SF	16.716 AC
1B	5,583.13 SF	0.128 AC	NON-BUILDING LOT	OPEN SPACE / H.O.A.	1B		
1C	9,924.22 SF	0.227 AC	NON-BUILDING LOT	OPEN SPACE / H.O.A.	1C		
1D	9,949.34 SF	0.228 AC	NON-BUILDING LOT	OPEN SPACE / H.O.A.	1D		
1E	33,387.71 SF	0.766 AC	NON-BUILDING LOT	OPEN SPACE / H.O.A.	1E		
1F	50,163.56 SF	1.151 AC	NON-BUILDING LOT	OPEN SPACE / H.O.A.	1F		
1G	4,127.79 SF	0.094 AC	NON-BUILDING LOT	OPEN SPACE / H.O.A.	1G		
1H	622.31 SF	0.014 AC	NON-BUILDING LOT	OPEN SPACE / H.O.A.	1H		
1I	447,348.20 SF	10.269 AC	NON-BUILDING LOT	OPEN SPACE / H.O.A.	1I		
1J	101.96 SF	0.002 AC	NON-BUILDING LOT	OPEN SPACE / H.O.A.	1J		
2A	47,859.55 SF	1.098 AC	EXISTING RESIDENCE	RETAINED BY BANZHOFFS			
3A	226,719.12 SF	5.204 AC	ROUTE 15 R.O.W.	DEDICATED TO PENNDOT			
3B	4,219.70 SF	0.096 AC	ROUTE 15 R.O.W.	DEDICATED TO PENNDOT			
3C	35,465.38 SF	0.814 AC	ROUTE 15 R.O.W.	DEDICATED TO PENNDOT			
4A	39,208.83 SF	0.900 AC	ROUTE 15 R.O.W.	DEDICATED TO PENNDOT			
4B	8,349.75 SF	0.191 AC	GRANTHAM ROAD R.O.W.	DEDICATED TO PENNDOT			
5A	33,114.10 SF	0.760 AC	NON-BUILDING LOT	RETAINED BY BANZHOFFS	5A	304,128.96 SF	6.981 AC
5B	1,866.35 SF	0.042 AC	NON-BUILDING LOT	RETAINED BY BANZHOFFS	5B		
5C	99,044.89 SF	2.273 AC	NON-BUILDING LOT	RETAINED BY BANZHOFFS	5C		
5D	21,595.46 SF	0.495 AC	NON-BUILDING LOT	RETAINED BY BANZHOFFS	5D		
5E	148,508.16 SF	3.409 AC	NON-BUILDING LOT	RETAINED BY BANZHOFFS	5E		
6A	9,044.92 SF	0.207 AC	PROPOSED ROAD R.O.W.	DEDICATED TO TOWNSHIP	6A	197,545.20 SF	4.535 AC
6B	179,580.14 SF	4.122 AC	PROPOSED ROAD R.O.W.	DEDICATED TO TOWNSHIP	6B		
6C	285.60 SF	0.006 AC	PROPOSED ROAD R.O.W.	DEDICATED TO TOWNSHIP	6C		
6D	8,634.54 SF	0.198 AC	PROPOSED ROAD R.O.W.	DEDICATED TO TOWNSHIP	6D		
7	4,172.00 SF	0.095 AC	BUILDING LOT	TOWNHOUSE			
8	2,834.72 SF	0.065 AC	BUILDING LOT	TOWNHOUSE			
9	2,820.22 SF	0.064 AC	BUILDING LOT	TOWNHOUSE			
10	2,747.30 SF	0.063 AC	BUILDING LOT	TOWNHOUSE			
11	3,806.57 SF	0.087 AC	BUILDING LOT	TOWNHOUSE			
12	3,770.80 SF	0.086 AC	BUILDING LOT	TOWNHOUSE			
13	2,378.73 SF	0.054 AC	BUILDING LOT	TOWNHOUSE			
14	2,317.69 SF	0.053 AC	BUILDING LOT	TOWNHOUSE			
15	3,455.88 SF	0.079 AC	BUILDING LOT	TOWNHOUSE			
16	3,559.39 SF	0.081 AC	BUILDING LOT	TOWNHOUSE			
17	2,488.95 SF	0.057 AC	BUILDING LOT	TOWNHOUSE			
18	2,376.30 SF	0.054 AC	BUILDING LOT	TOWNHOUSE			
19	3,488.97 SF	0.080 AC	BUILDING LOT	TOWNHOUSE			
20	4,521.82 SF	0.103 AC	BUILDING LOT	TOWNHOUSE			
21	2,746.31 SF	0.063 AC	BUILDING LOT	TOWNHOUSE			
22	2,631.77 SF	0.060 AC	BUILDING LOT	TOWNHOUSE			
23	2,596.21 SF	0.059 AC	BUILDING LOT	TOWNHOUSE			
24	4,178.66 SF	0.095 AC	BUILDING LOT	TOWNHOUSE			
25	4,440.64 SF	0.101 AC	BUILDING LOT	TOWNHOUSE			
26	2,587.37 SF	0.059 AC	BUILDING LOT	TOWNHOUSE			
27	2,587.37 SF	0.059 AC	BUILDING LOT	TOWNHOUSE			
28	2,587.37 SF	0.059 AC	BUILDING LOT	TOWNHOUSE			
29	3,881.06 SF	0.089 AC	BUILDING LOT	TOWNHOUSE			
30	3,881.06 SF	0.089 AC	BUILDING LOT	TOWNHOUSE			
31	2,587.37 SF	0.059 AC	BUILDING LOT	TOWNHOUSE			
32	2,587.37 SF	0.059 AC	BUILDING LOT	TOWNHOUSE			
33	2,587.37 SF	0.059 AC	BUILDING LOT	TOWNHOUSE			
34	3,881.06 SF	0.089 AC	BUILDING LOT	TOWNHOUSE			
35	3,881.06 SF	0.089 AC	BUILDING LOT	TOWNHOUSE			
36	2,587.37 SF	0.059 AC	BUILDING LOT	TOWNHOUSE			
37	2,587.38 SF	0.059 AC	BUILDING LOT	TOWNHOUSE			
38	2,604.45 SF	0.059 AC	BUILDING LOT	TOWNHOUSE			
39	4,595.58 SF	0.105 AC	BUILDING LOT	TOWNHOUSE			
40	4,245.02 SF	0.097 AC	BUILDING LOT	TOWNHOUSE			
41	2,433.18 SF	0.055 AC	BUILDING LOT	TOWNHOUSE			
42	2,393.40 SF	0.054 AC	BUILDING LOT	TOWNHOUSE			
43	2,433.18 SF	0.055 AC	BUILDING LOT	TOWNHOUSE			
44	3,905.54 SF	0.089 AC	BUILDING LOT	TOWNHOUSE			
45	4,885.14 SF	0.112 AC	BUILDING LOT	TOWNHOUSE			
46	2,455.66 SF	0.056 AC	BUILDING LOT	TOWNHOUSE			
47	2,504.32 SF	0.057 AC	BUILDING LOT	TOWNHOUSE			
48	4,965.44 SF	0.113 AC	BUILDING LOT	TOWNHOUSE			
49	5,126.97 SF	0.117 AC	BUILDING LOT	TOWNHOUSE			
50	2,653.20 SF	0.060 AC	BUILDING LOT	TOWNHOUSE			
51	2,653.20 SF	0.060 AC	BUILDING LOT	TOWNHOUSE			
52	5,126.97 SF	0.117 AC	BUILDING LOT	TOWNHOUSE			
53	5,126.97 SF	0.117 AC	BUILDING LOT	TOWNHOUSE			
54	2,653.20 SF	0.060 AC	BUILDING LOT	TOWNHOUSE			
55	2,653.20 SF	0.060 AC	BUILDING LOT	TOWNHOUSE			
56	5,126.97 SF	0.117 AC	BUILDING LOT	TOWNHOUSE			
57	4,965.44 SF	0.113 AC	BUILDING LOT	TOWNHOUSE			
58	2,504.32 SF	0.057 AC	BUILDING LOT	TOWNHOUSE			
59	2,455.66 SF	0.056 AC	BUILDING LOT	TOWNHOUSE			
60	4,885.14 SF	0.112 AC	BUILDING LOT	TOWNHOUSE			
61	13,563.81 SF	0.311 AC	BUILDING LOT	SINGLE FAMILY DETACHED			
62	14,128.97 SF	0.324 AC	BUILDING LOT	SINGLE FAMILY DETACHED			
63	12,750.23 SF	0.292 AC	BUILDING LOT	SINGLE FAMILY DETACHED			
64	12,167.06 SF	0.279 AC	BUILDING LOT	SINGLE FAMILY DETACHED			
65	13,232.42 SF	0.303 AC	BUILDING LOT	SINGLE FAMILY DETACHED			
66	11,188.63 SF	0.256 AC	BUILDING LOT	SINGLE FAMILY DETACHED			
67	12,684.71 SF	0.291 AC	BUILDING LOT	SINGLE FAMILY DETACHED			
68	13,710.39 SF	0.314 AC	BUILDING LOT	SINGLE FAMILY DETACHED			
69	19,034.99 SF	0.436 AC	BUILDING LOT	SINGLE FAMILY DETACHED			
TOTAL	1,939,706.60 SF	44.529 AC					

Jul 27, 2021 Z:\Prj-7000\7680\Banzhoff\Pre\dwg\7680C-1.dwg

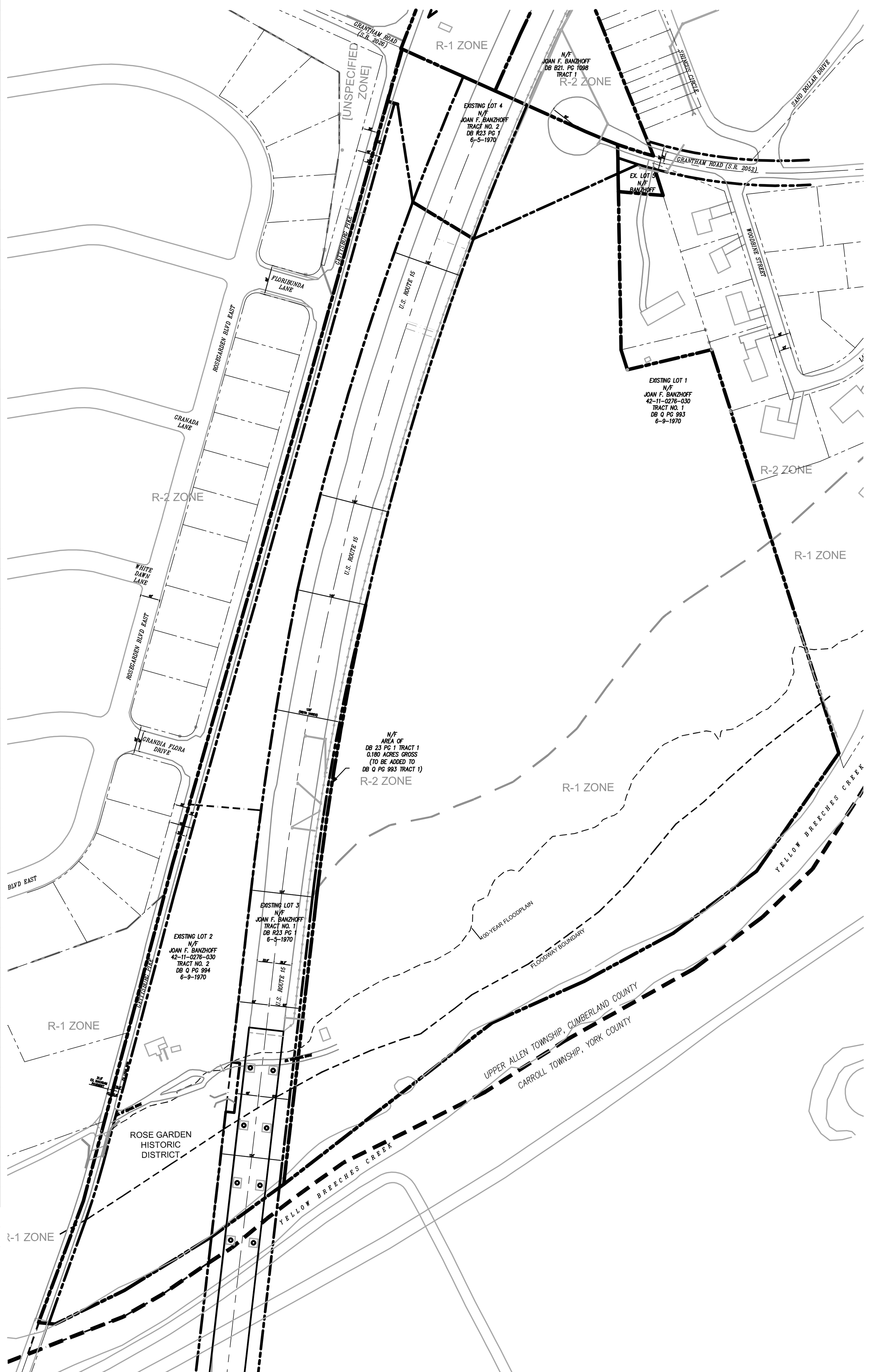

EXISTING LOTS

OWNERS / APPLICANTS / DEVELOPERS

OWNERS/APPLICANTS/DEVELOPERS : ESTATE OF MARTHA JOAN BANZHOFF
c/o HARRY G. BANZHOFF, EXECUTOR
2308 STUMPSTOWN ROAD
MECHANICSBURG, PA 17055
(717) 691-5572
hbanzhoff@strsnet.com

TOTAL SITE AREA: 1,939,706.60 SF (44.529 ACRES)

EXISTING UNITS: 1 EXISTING HOME
PROPOSED UNITS: 1 EXISTING HOME TO REMAIN
63 PROPOSED UNITS (CONSERVATION SUBDIVISION)
64 UNITS TOTAL

EXISTING DENSITY: 1 UNIT / 44.529 ACRES = 0.02 UNITS/ACRE
PROPOSED DENSITY: 64 UNITS / 44.529 ACRES = 1.44 UNITS/ACRE

EXISTING SEWAGE DISPOSAL: LOT 2 – PRIVATE, ALL OTHER LOTS – PUBLIC
PROPOSED SEWAGE DISPOSAL: LOT 2A – PRIVATE, ALL OTHER LOTS – PUBLIC

EXISTING WATER SUPPLY: LOT 2 – PRIVATE, ALL OTHER LOTS – PUBLIC
PROPOSED WATER SUPPLY: LOT 2A – PRIVATE, ALL OTHER LOTS – PUBLIC

ZONING DISTRICTS: R-1 (LOW-DENSITY RESIDENTIAL DISTRICT)
R-2 (MEDIUM-DENSITY RESIDENTIAL DISTRICT)
CSO (CONSERVATION DESIGN OVERLAY DISTRICT)

PHASING SCHEDULE

PHASE	TOWNHOMES	S.F. DETACHED	SCHEDULE	% DEVELOPMENT
PHASE 1:	13	0	2022–2024	20.6%
PHASE 2:	15	4	2024–2026	30.2%
PHASE 3:	26	5	2026–2028	49.2%
TOTAL UNITS:	54	9	2021–2028	100%

SPECIAL EXCEPTION GRANTED

1. ZONING ORDINANCE SECTION 245–115 – AT A MEETING ON NOVEMBER 8, 2012 THE ZONING HEARING BOARD APPROVED A SPECIAL EXCEPTION UNDER SECTION 245–115 OF THE ZONING ORDINANCE RELATING TO STEEP SLOPES. ALL DEVELOPMENT ON LOTS WITHIN THE STEEP SLOPE PROTECTION OVERLAY DISTRICT SHALL CONFORM TO THE APPLICABLE PROVISIONS OF CHAPTER 245, ARTICLE XVI OF THE ZONING ORDINANCE.

ZONING DATA

BUILDING LOT DESIGN REQUIREMENTS:	R-1	R-2	CSO OVERLAY
MAX. BUILDING HEIGHT:	35 FEET	35 FEET	35 FEET
SINGLE FAMILY DETACHED MIN. LOT AREA (PRIVATE SEWER & WATER):	1 ACRE	1 ACRE	N/A
SINGLE FAMILY DETACHED MIN. LOT WIDTH (PRIVATE SEWER & WATER):	100 FEET	100 FEET	N/A
SINGLE FAMILY DETACHED MIN. LOT AREA (PUBLIC SEWER & WATER):	20,000 SQ. FT.	10,000 SQ. FT.	N/A
SINGLE FAMILY DETACHED MIN. LOT WIDTH (PUBLIC SEWER & WATER):	75 FEET	75 FEET	N/A
SINGLE FAMILY ATTACHED MIN. LOT AREA (PUBLIC SEWER & WATER):	N/A	2.000 SQ. FT.	2.000 SQ. FT.
SINGLE FAMILY ATTACHED MIN. LOT WIDTH (PUBLIC SEWER & WATER):	N/A	20' INTERIOR, 35' END	20' INTERIOR, 35' END
MIN. FRONT SETBACK:	30 FEET	25 FEET	25 FEET
MIN. SIDE SETBACK:	15 FEET	10 FEET	10 FEET
MIN. REAR SETBACK:	15 FEET	15 FEET	15 FEET
EXTERNAL ROAD ULTIMATE RIGHT-OF-WAY:	N/A	N/A	100 FEET
TRACT BOUNDARIES:	N/A	N/A	50 FEET
SINGLE FAMILY DETACHED MIN. GREENWAY SETBACK:	30 FEET	30 FEET	30 FEET
MAXIMUM LOT COVERAGE (BUILDING):	25%	30%	50% (SINGLE FAMILY DETACHED)
MAXIMUM LOT COVERAGE (IMPERVIOUS):	40%	45%	60% (SINGLE FAMILY DETACHED
MINIMUM GREENWAY AREA (OPTION 1):	N/A	N/A	40%

DEFERRALS (APPROVED MAY 6, 2015)

1. SALDO SECTION 220–16.A(2) CURBS ALONG EXISTING ROADS – A DEFERRAL OF THIS SECTION IS REQUESTED TO GRANT RELIEF FROM CONSTRUCTION OF CURBS ALONG OLD GETTYSBURG PIKE AND GRANTHAM ROAD.
2. SALDO SECTION 220–16.B(3) SIDEWALKS ALONG EXISTING ROADS – A DEFERRAL OF THIS SECTION IS REQUESTED TO GRANT RELIEF FROM CONSTRUCTION OF SIDEWALKS ALONG OLD GETTYSBURG PIKE AND GRANTHAM ROAD.

MODIFICATIONS (APPROVED MAY 6, 2015)

1. SALDO SECTION 220–15.E(5) SEPARATION DISTANCE – A MODIFICATION OF THIS SECTION IS REQUESTED TO ALLOW FOR A REDUCED SEPARATION DISTANCE BETWEEN STREETS INTERSECTING A COLLECTOR ROAD.
2. SALDO SECTION 220–15.F(2) RIGHT-OF-WAY WIDTH – A MODIFICATION OF THIS SECTION IS REQUESTED TO ALLOW FOR HEAD-IN PARKING ON TOWNHOUSE SOUTH ROAD TO BE MAINTAINED BY HOMEOWNERS' ASSOCIATION INSTEAD OF THE TOWNSHIP.
3. SALDO SECTION 220–16.B(2) STREET CROSS-SECTION – A MODIFICATION OF THIS SECTION IS REQUESTED TO ALLOW FOR A GRASS STRIP WIDTH OF 3 FEET 2 INCHES (3'–2") INSTEAD OF 4 FEET.

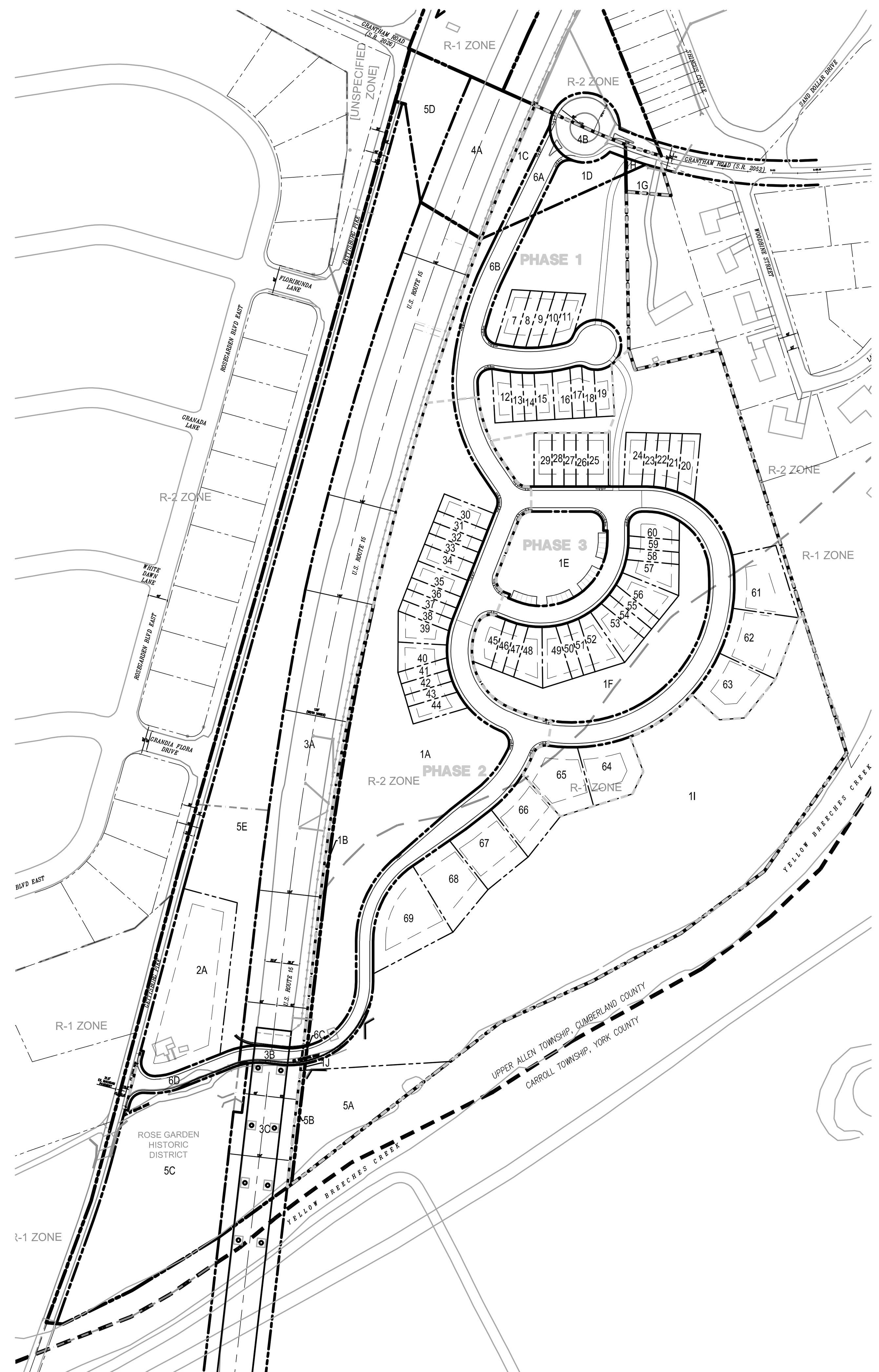

PROPOSED LOT AREAS

GENERAL NOTES

1. THE PURPOSE OF THIS PLAN IS TO CONSTRUCT A 63-UNIT CONSERVATION SUBDIVISION.
2. THE SITE IS BEING DEVELOPED PER THE TOWNSHIP REQUIREMENTS FOR DEVELOPMENT OF AN EXISTING TRACT ALONG A GREENWAY. A CONSERVATION SUBDIVISION IS REQUIRED.
3. MELHAM ASSOCIATES, PC DOES NOT GUARANTEE THE LOCATION OR DEPTH OF ANY PUBLIC OR PRIVATE UNDERGROUND UTILITY OR STRUCTURE WHICH MAY OR MAY NOT BE SHOWN ON THESE PLANS.
4. ALL UTILITY COMPANIES MUST BE CONTACTED BY THE CONTRACTOR TO VERIFY LOCATIONS, PRIOR TO ANY FUTURE CONSTRUCTION. CONTRACTORS SHALL COMPLY WITH ALL REQUIREMENTS OF PA ACT 38 UNDERGROUND LINE LOCATING SERVICE. PHONE: 811
5. 100-YEAR FLOOD PLAIN EXISTS ON THE TRACT ACCORDING TO AVAILABLE FEMA MAPPING (MAP #42041C0269E DATED 3/16/09) AND IS SHOWN ON THESE PLANS.
6. WETLAND DELINEATION PERFORMED BY AQUA-NICHE AND SURVEYED BY MELHAM ASSOCIATES.
7. MONUMENTATION SHALL BE SET AT ALL PROPOSED LOT CORNERS PER TOWNSHIP REQUIREMENTS.
8. RIGHTS-OF-WAY OF STREETS ARE TO BE DEDICATED AS DETAILED ON THE 'PLAT AND PLAN' SHEETS.
9. PROPOSED WATER LINE LOCATION IS APPROXIMATE AND SHALL BE RELOCATED AS NECESSARY.
10. THE APPLICANT AGREES TO COMPLY WITH ALL APPLICABLE ORDINANCES IN THE DEVELOPMENT OF THIS PLAN.
11. OWNERSHIP OF THE PROPOSED SANITARY SEWER FACILITIES SHALL BE DEDICATED TO THE TOWNSHIP UPON COMPLETION AND ACCEPTANCE BY THE TOWNSHIP; THE DEVELOPER SHALL PREPARE AND RECORD A SEPARATE DEED OF DEDICATION FOR THE SANITARY SEWER SYSTEM IN ACCORDANCE WITH THE TOWNSHIP RULES AND REGULATIONS. THE DEVELOPER SHALL ALSO PREPARE AND RECORD A SEPARATE DEED OF EASEMENT FOR SANITARY SEWER FACILITIES LOCATED OUTSIDE TOWNSHIP STREET RIGHTS-OF-WAY AND/OR FOR SANITARY FACILITIES IN PUBLIC STREETS IF IT IS INTENDED TO PLACE SAID COMPLETED FACILITIES INTO SERVICE PRIOR TO DEDICATION OF THE STREETS TO THE TOWNSHIP.
12. LOT 2A HAS AN EXISTING RESIDENCE SERVED BY AN ON-LOT SYSTEM TO REMAIN. LOTS 7–19, 25–34, AND 45–60 WILL BE SERVED BY GRAVITY SANITARY SEWER. THE SANITARY SEWER SERVICE FOR LOTS 20–24, 35–44, AND 61–69 SHALL CONSIST OF A LOW-PRESSURE SEWER SYSTEM.
13. LINEAL FEET OF NEW STREET: 4402.62
14. A SCOPING MEETING WITH PENNDOT WAS HELD REGARDING THE GRANTHAM ROAD ENTRANCE. THE DEPARTMENT APPROVED IN PRINCIPLE THE ACCESS AS SHOWN, WITH THE RECOMMENDATION THAT THE CUL-DE-SAC BE CONVERTED TO A ROUNDABOUT BY INSTALLING AN ISLAND WITHIN THE CUL-DE-SAC.
15. EACH BUILDING LOT SHALL CONTAIN A MINIMUM OF TWO OFF-STREET PARKING SPACES.
16. DRAINAGE EASEMENTS HAVE BEEN PROVIDED FOR THE PROPOSED STORMWATER MANAGEMENT FACILITIES LOCATED WITHIN BUILDING LOTS. THE TOWNSHIP SHALL BE GRANTED ACCESS TO ALL OPEN SPACE AREAS FOR PURPOSES OF STORMWATER MANAGEMENT FACILITY INSPECTION AND/OR MAINTENANCE AS NECESSARY.
17. THE MUNICIPAL ENGINEER OR HIS DESIGNEE SHALL BE PERMITTED TO INSPECT ALL PHASES OF THE SITE DEVELOPMENT WORK IN PROGRESS, TO ENSURE COMPLIANCE W/THE APPROVED PLANS AND STORM WATER MANAGEMENT AND EROSION AND SEDIMENTATION CONTROL REQUIREMENTS.
18. A HIGHWAY OCCUPANCY PERMIT IS REQUIRED PURSUANT TO SECTION 420 OF THE ACT OF JUNE 1, 1945 (P.L. 1242, NO. 428) KNOWN AS THE 'STATE HIGHWAY LAW'.
19. THE APPLICANTS SHALL BE RESPONSIBLE FOR PROVIDING AS-BUILT PLANS OF ALL SWM BMPS INCLUDED IN THE APPROVED SWM SITE PLAN. THE AS-BUILT PLANS AND AN EXPLANATION OF ANY DISCREPANCIES W/THE CONSTRUCTION PLANS SHALL BE SUBMITTED TO THE MUNICIPALITY. THE AS-BUILT SUBMISSION SHALL INCLUDE A CERTIFICATION OF COMPLETION SIGNED BY A QUALIFIED PROFESSIONAL VERIFYING THAT ALL PERMANENT SWM BMPS HAVE BEEN CONSTRUCTED ACCORDING TO THE APPROVED PLANS AND SPECIFICATIONS. IF ANY LICENSED QUALIFIED PROFESSIONALS CONTRIBUTED TO THE CONSTRUCTION PLANS, THEN A LICENSED QUALIFIED PROFESSIONAL MUST SIGN THE COMPLETION CERTIFICATE.
20. MONUMENTS AND MARKERS SHALL BE PROVIDED IN ACCORDANCE WITH SECTION 220–24 OF THE CODIFIED ORDINANCES OF UPPER ALLEN TOWNSHIP.
21. THE MAINTENANCE OF THE WALKING TRAIL, EMERGENCY ACCESS ROADS, AND ALL OTHER APPLICABLE OPEN SPACE SHALL BE THE RESPONSIBILITY OF THE HOMEOWNERS ASSOCIATION.
22. THE APPLICANT SHALL ALSO COMPLY WITH ALL FEES, TAXES, UTILITY RENTALS, BUILDING, POLICE OR FIRE CODES, ORDINANCES, RESOLUTIONS AND REGULATIONS AS MAY BE IN EFFECT FROM TIME TO TIME CONCERNING THE PROPOSED DEVELOPMENT.
23. THE APPLICANT SHALL PAY SUCH FEES AS ARE CHARGED FROM TIME TO TIME BY UPPER ALLEN TOWNSHIP FOR OTHER FURTHER REVIEWS OR PERMITS AS MAY BE REQUIRED CONCERNING THE PROPOSED DEVELOPMENT.
24. THE OWNER SHALL ENTER INTO AN AGREEMENT WITH ADJOINER CRAIG E. & BARBARA N. FAWBER TO PROVIDE AN ACCESS EASEMENT FOR THEIR DRIVEWAY AS SHOWN ON THESE PLANS. A COPY OF THE RECORDED AGREEMENT SHALL BE PROVIDED TO THE TOWNSHIP WITH THE FINAL PLAN FOR PHASE 1. A NOTE SHALL BE PLACED ON THE FINAL PLAN FOR PHASE 1 INDICATING THAT THE EASEMENT IS IN PLACE.
25. STORMWATER PIPE RODENT SCREENS SHALL BE GIVEN TO THE TOWNSHIP FOR FUTURE INSTALLATION AND SHALL NOT BE INSTALLED AT THE TIME OF CONSTRUCTION.
26. ALL PROPOSED STREETS ARE TO BE PUBLIC AND ARE OFFERED FOR DEDICATION TO THE TOWNSHIP.

RECREATION LAND ACQUISITION AND IMPROVEMENT FUND

In the event the Board of Commissioners determines not to accept land offered for recreation use, a contribution to the Township Recreation Land Acquisition and Improvement Fund in lieu of dedication shall be required.

(a) Fees for residential development. Every subdivision or land development for residential purposes shall contribute to the Township Recreation Land Acquisition and Improvement Fund (the "fund) an amount of $2,300 per dwelling unit. This fee may be revised, from time to time, by resolution of the Board of Commissioners.

(b) Fees for nonresidential development. Every subdivision or land development for any new business or professional, commercial or industrial purposes shall contribute to the fund an amount of $200 per employee. This fee may be revised, from time to time, by resolution of the Board of Commissioners. The fee for nonresidential development shall be based on the following:

[1] Business and professional office use. One employee per 300 square feet of floor area for office space.
[2] Industrial use. One employee per 1,500 square feet of floor area for industrial purposes.
[3] Commercial uses. One employee per 500 square feet of floor area for commercial use.
[4] Institutional use. One employee per 500 square feet of floor area for institutional use. Public uses and facilities owned and operated by political subdivisions, public libraries, and public school districts or entities are excluded from the requires of this provision.

(c) The fees paid and contributed to the fund shall be paid upon approval of the subdivision or land development plan or any phase or section thereof. Payment of the required contribution shall be included as a condition of approval of such subdivision and land development plans.

UTILITY EASEMENT NOTES

§ 220-23. Utility easements.

A. Utilities.

(1) Easements shall be provided for poles, wires, conduits, storm and sanitary sewer lines, gas, water and heat mains, and other utilities intended to serve the abutting lots and for access to facilities. Wherever possible such easements shall be centered on the side or rear lot lines or along the front lot lines. The minimum width of utility easements shall be as follows:

(a) Sanitary sewer and storm drainage facilities: 30 feet.

(b) Underground and overhead public utilities: 20 feet.

(2) Nothing shall be placed, planted, set or put within the area of an easement that would adversely affect the function of the easement or conflict with the easement agreement. This requirement shall be noted on the final plan.

(3) Where any natural gas, petroleum or high-tension electric transmission line traverses a subdivision or land development, the applicant shall confer with the applicable transmission or distribution company to determine the minimum easement requirements for the transmission line. Additionally, the Township will require, with the final plan application, a statement from the owner of the transmission line stating any conditions on the use of the tract which shall contain the above.

(4) The applicant shall provide the Township with copies of easement agreements or statements from public utility providers, as applicable, to confirm the adequacy of proposed easements.

B. Stormwater, sanitary sewer and clear water collection systems. Where a subdivision and/or land development are traversed by stormwater, sanitary sewer or clear water collection system facilities, a utility easement shall be provided. In no case shall the easement be less than 30 feet in width. Additional width may be required by the Board of Commissioners depending on the purpose and use of the easements.

C. Stream, watercourse, drainage channel, pond or lake.

(1) Where a subdivision and/or land development is traversed by a watercourse, drainageway, channel or stream, there shall be provided a drainage easement conforming sustainability with its location for the purpose of widening, deepening, relocating, improving or protecting such watercourses, providing proper maintenance, or for the purpose of installing a stormwater or clear water system. The following standards shall apply:

(a) Perennial streams: 15 feet from the stream bank.

(b) Intermittent stream, drainageway, channel or swale: 15 feet from the center line of the watercourse.

(c) An access easement shall be provided to the drainage easement. The width of such access points shall not be less than 30 feet.

(2) In no case shall any drainage easement be less than 30 feet in width.

D. Conservation.

(1) Where environmental protection and floodplain overlay zones exist, a conservation easement shall be depicted on the plan within the overlay area.

(2) In all subdivisions and land developments, a fifteen-foot conservation easement shall be provided around all delineated wetland areas to ensure minimal disturbance and encroachment in these areas.

E. Pedestrian.

(1) Where necessary for access to public or common lands, a pedestrian easement shall be provided with a width of no less than 10 feet. Additional width, fencing and/or planting may be required by the Board of Commissioners, depending on the purpose and use of the easement.

(2) When a subdivision proposes multifamily attached dwellings, such as townhouses, the plans shall include an access easement for the purposes of property maintenance along the front and rear property lines of all units and side property lines of the end units, to allow all lot owners within the unit access to front and rear yards. The access easement shall have a minimum width of 10 feet. This requirement shall be noted on the final plan and shall be included in all deeds for lots which contain the easement. This easement is intended only for pedestrian access or for small and nonlicensed motorized maintenance equipment.

architecture
engineering
landscape architecture
planning
surveying

MELHAM ASSOCIATES, PC

2247 North Front Street
Harrisburg, PA 17110

tel 717 238 5000

fax 717 236 2600

www.melham.com

[redacted]

0 100 200

CLIENT

Estate of
Martha Joan Banzhoff
c/o Harry G. Banzhoff,
Executor

2308 STUMPSTOWN ROAD
MECHANICSBURG, PA 17055
(717) 691-5572

PROJECT

Banzhoff Tract

UPPER ALLEN TOWNSHIP, CUMBERLAND COUNTY, PA

PHASE

PRELIMINARY

DRAWING

OVERALL LOT LAYOUT
AND SITE DATA

© 2021 MELHAM ASSOCIATES PC

SCALE

1" = 200'

[redacted]

JOB #

7680

CADD

7680C-1.dwg

DATE

7/27/21

SHEET

C-1.1

PHASE	TOWNHOMES	S.F. DETACHED	SCHEDULE	% DEVELOPMENT
PHASE 1:	13	0	2022-2024	20.6%
PHASE 2:	15	4	2024-2026	30.2%
PHASE 3:	26	5	2026-2028	49.2%
TOTAL UNITS:	54	9	2021-2028	100%

PHASE	NUMBER OF BUILDING LOTS	LOT NUMBERS
PHASE 1:	13 TOWNHOME LOTS	LOTS #7-19
PHASE 2:	15 TOWNHOME LOTS	LOTS #30-44
PHASE 2:	4 SINGLE FAMILY LOTS	LOTS #66-69
PHASE 3:	26 TOWNHOME LOTS	LOTS #20-29, #45-60
PHASE 3:	5 SINGLE FAMILY LOTS	LOTS #61-65

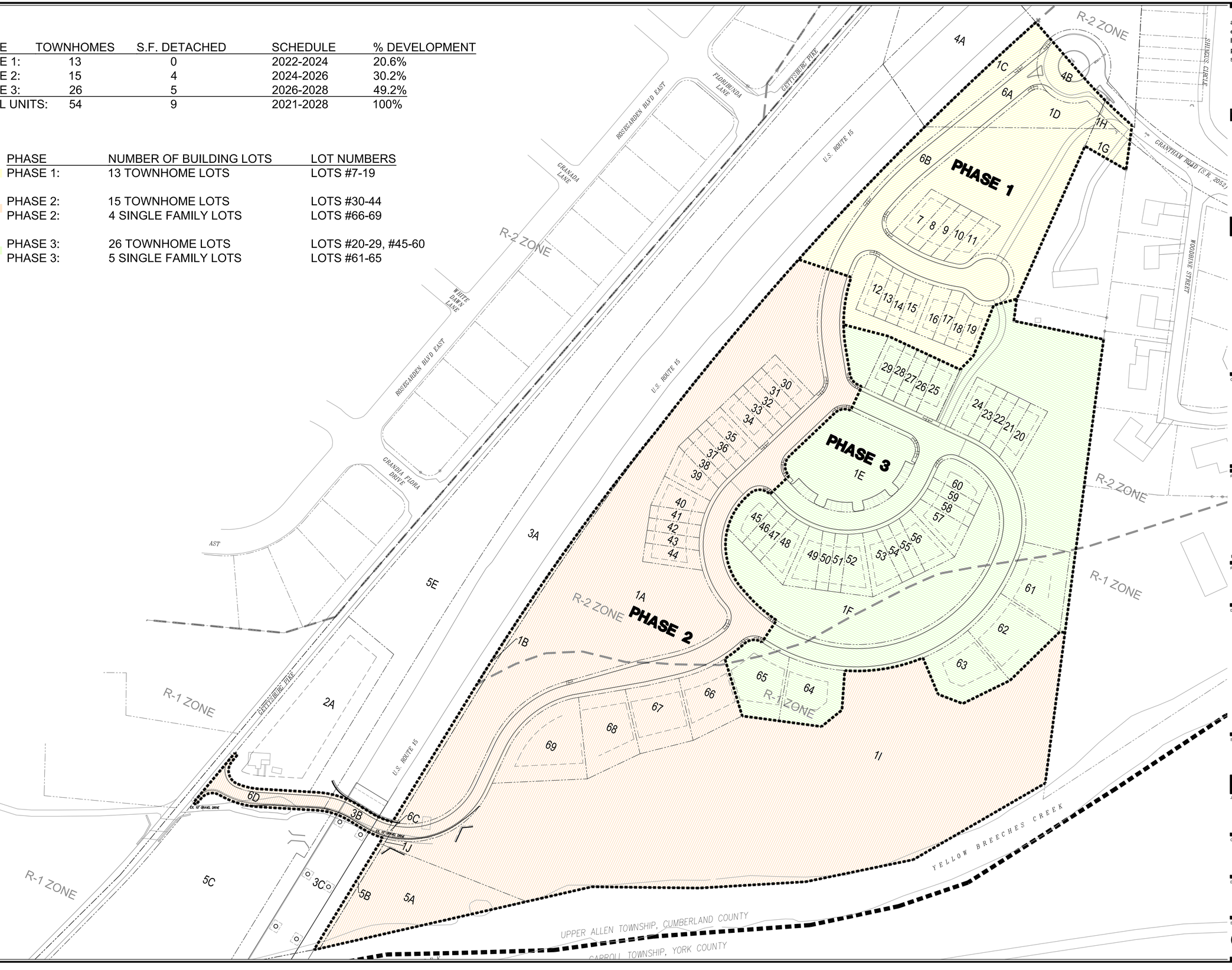

architecture
engineering
landscape architecture
planning
surveying

melham ASSOCIATES, PC

2247 North Front Street
Harrisburg, PA 17110

tel 717 238 5000

fax 717 236 2600

www.melham.com

CLIENT

Estate of
Martha Joan Banzhoff
c/o Harry G. Banzhoff,
Executor

2308 STUMPSTOWN ROAD
MECHANICSBURG, PA 17055
(717) 691-5572

PROJECT

Banzhoff Tract

UPPER ALLEN TOWNSHIP, CUMBERLAND COUNTY, PA

PHASE

PRELIMINARY

DRAWING

PHASING PLAN

© 2021 MELHAM ASSOCIATES PC

SCALE

1" = 80'

JOB #

7680

CADD

7680C-1.dwg

DATE

7/27/21

SHEET

C-1.2

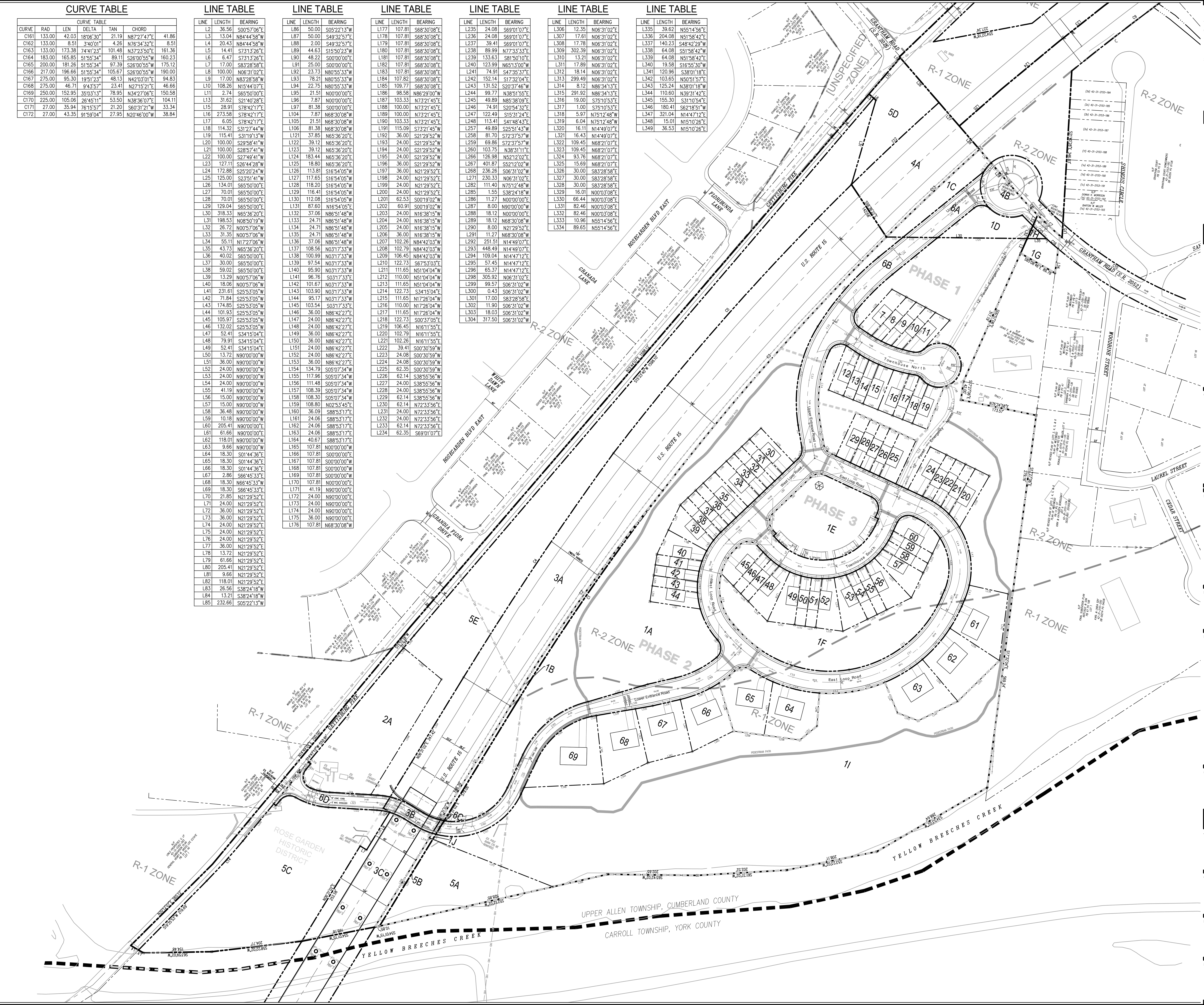

CURVE TABLE

CURVE	RAD	LEN	DELTA	TAN	CHORD	
C1	5659.65	595.22	6°01'33"	297.88	S09°31'48"W	594.94
C2	4514.00	595.85	7°33'47"	298.36	S10°17'56"W	595.42
C3	5659.65	765.53	7°45'00"	383.35	S16°25'05"W	764.95
C4	7720.22	609.45	4°31'23"	304.88	S08°46'44"W	609.29
C5	5799.65	811.80	8°01'12"	406.56	S16°33'11"W	811.14
C6	955.37	69.20	4°09'01"	34.62	S67°54'30"E	69.19
C7	955.37	75.34	4°31'05"	37.69	S72°14'34"E	75.32
C8	5799.65	573.03	5°39'40"	286.75	S28°48'12"W	572.80
C9	5659.65	363.68	3°40'54"	181.90	S27°50'01"W	363.62
C10	930.37	326.72	20°07'15"	165.06	S83°23'08"E	325.04
C12	5799.65	271.13	2°40'43"	135.59	S21°54'08"W	271.11
C13	5659.65	289.00	2°55'32"	144.53	S21°45'21"W	288.97
C14	1450.40	121.80	4°48'41"	60.93	N17°11'32"E	121.76
C15	980.37	42.48	2°28'58"	21.24	S71°47'02"E	42.48
C16	980.37	35.06	2°02'56"	17.53	S74°02'59"E	35.05
C17	70.00	193.13	158°04'41"	361.43	N76°47'40"W	137.45
C18	930.37	75.71	4°39'45"	37.88	S70°59'38"E	75.69
C19	70.00	20.52	16°47'31"	10.33	S15°46'14"W	20.44
C20	70.00	44.79	36°39'29"	23.19	S10°57'16"E	44.03
C21	70.00	51.25	41°56'56"	26.83	S50°15'28"E	50.11
C22	70.00	78.99	64°39'06"	44.30	N76°26'30"E	74.86
C23	980.37	33.78	1°58'26"	16.89	S69°33'20"E	33.77
C24	980.37	8.92	0°31'17"	4.46	S70°48'12"E	8.92
C25	980.37	33.56	1°57'40"	16.78	S72°02'41"E	33.56
C26	27.00	8.72	18°30'36"	4.40	N16°37'47"E	8.68
C27	27.00	39.06	82°52'59"	23.84	S67°19'34"W	35.74
C28	625.00	208.90	19°09'04"	105.44	S16°18'33"W	207.93
C29	600.00	176.04	16°48'38"	88.66	S17°28'46"W	175.41
C30	600.00	24.51	2°20'26"	12.26	S07°54'14"W	24.51
C31	575.00	114.06	11°21'56"	57.22	S20°12'07"W	113.87
C32	325.00	232.48	40°59'05"	121.46	S13°45'31"E	227.55
C33	300.00	214.60	40°59'05"	112.12	S13°45'31"E	210.05
C34	275.00	163.68	34°06'09"	84.34	S17°12'00"E	161.27
C35	27.00	26.27	55°44'56"	14.28	N06°22'36"W	25.25
C36	27.00	26.27	55°44'56"	14.28	S62°07'32"E	25.25
C37	27.00	32.28	68°30'08"	18.38	S55°44'56"W	30.39
C38	175.00	13.88	4°32'43"	6.94	N87°43'39"W	13.88
C39	175.00	24.06	7°52'39"	12.05	N81°30'58"W	24.04
C40	175.00	24.49	8°01'11"	12.27	N73°34'03"W	24.48
C41	175.00	38.82	12°42'33"	19.49	N63°12'11"W	38.74
C42	175.00	135.64	44°24'28"	71.43	N34°38'41"W	132.27
C43	175.00	32.67	10°41'51"	16.38	N07°05'31"W	32.63
C44	150.00	231.06	88°15'24"	145.50	N45°52'18"W	208.88
C45	125.00	68.97	31°36'42"	35.39	N74°11'39"W	68.09
C46	125.00	123.58	56°38'43"	67.37	N30°03'57"W	118.61
C47	325.00	56.20	9°54'25"	28.17	N03°12'37"E	56.13
C48	325.00	94.27	16°37'10"	47.47	N16°28'25"E	93.94
C49	325.00	99.96	17°37'23"	50.38	N33°35'42"E	99.57
C50	325.00	75.68	13°20'33"	38.01	N49°04'40"E	75.51
C51	300.00	301.03	57°29'31"	164.56	N27°00'10"E	288.56
C52	275.00	275.94	57°29'31"	150.85	N27°00'10"E	264.51
C53	325.00	75.68	13°20'33"	38.01	N62°25'12"E	75.51
C54	325.00	108.40	19°06'39"	54.71	N78°38'48"E	107.90
C55	325.00	59.30	10°27'13"	29.73	S86°34'17"E	59.21
C56	300.00	267.96	51°10'34"	143.66	N81°20'13"E	259.14
C57	300.00	33.07	6°18'58"	16.55	S69°55'01"E	33.05
C58	275.00	275.94	57°29'31"	150.85	N84°29'42"E	264.51
C59	175.00	78.88	25°49'37"	40.12	S53°50'44"E	78.22
C60	175.00	37.94	12°25'24"	19.05	S34°43'14"E	37.87
C61	175.00	24.25	7°56'22"	12.14	S24°32'21"E	24.23
C62	175.00	24.02	7°51'50"	12.03	S16°38'15"E	24.00
C63	175.00	24.25	7°56'22"	12.14	S08°44'10"E	24.23
C64	175.00	25.30	8°16'59"	12.67	S00°37'29"E	25.28
C65	175.00	28.67	9°23'12"	14.37	S08°12'36"W	28.64
C66	175.00	24.10	7°53'24"	12.07	S16°50'54"W	24.08
C67	175.00	2.15	0°42'16"	1.08	S21°08'44"W	2.15
C68	150.00	231.06	88°15'24"	145.50	S22°37'50"E	208.88
C69	125.00	123.58	56°38'43"	67.37	S38°26'11"E	118.61
C70	125.00	68.97	31°36'42"	35.39	S05°41'31"W	68.09
C71	150.00	29.32	11°12'00"	14.71	S32°48'18"W	29.27
C72	150.00	57.16	21°50'05"	28.93	S16°17'16"W	56.82
C73	75.00	85.59	65°23'21"	48.14	N16°51'17"W	81.02
C74	300.00	82.94	15°50'23"	41.73	S07°55'12"W	82.67
C75	27.00	42.61	90°24'48"	27.20	S30°41'15"E	38.32
C76	27.00	2.37	5°01'54"	1.19	S78°24'36"E	2.37
C77	27.00	44.35	94°06'25"	29.01	S46°54'17"W	39.53
C78	27.00	2.41	5°06'58"	1.21	N83°29'02"W	2.41
C79	275.00	10.25	2°08'06"	5.12	S81°59'36"E	10.25
C80	275.00	24.59	5°07'26"	12.30	S85°37'22"E	24.58
C81	275.00	25.20	5°15'04"	12.61	N89°11'23"E	25.19
C82	275.00	26.09	5°26'11"	13.06	N83°50'46"E	26.08
C83	275.00	26.31	5°28'54"	13.17	N78°23'13"E	26.30
C84	300.00	185.24	35°22'44"	95.68	N81°23'06"E	182.31
C85	325.00	11.63	2°03'01"	5.82	S81°57'03"E	11.63
C86	325.00	24.25	4°16'32"	12.13	S85°06'50"E	24.25
C87	325.00	24.06	4°14'31"	12.04	S89°22'21"E	24.06
C88	325.00	36.03	6°21'06"	18.03	N85°19'50"E	36.01
C89	325.00	36.35	6°24'31"	18.19	N78°57'02"E	36.33
C90	325.00	11.49	2°01'30"	5.74	N74°44'01"E	11.49
C91	27.00	25.34	53°46'49"	13.69	N48°45'21"E	24.42
C92	27.00	12.89	27°20'44"	6.57	S87°23'38"W	12.76
C93	27.00	7.24	15°21'46"	3.64	N71°15'07"W	7.22
C94	50.00	64.14	73°30'16"	37.34	S58°37'05"W	59.84
C95	50.00	109.15	125°04'50"	96.21	N22°05'22"W	88.73
C96	50.00	10.02	11°28'42"	5.03	N46°11'24"E	10.00
C97	50.00	37.86	43°22'55"	19.89	N73°37'12"E	36.96
C98	50.00	18.43	21°07'06"	9.32	S74°07'48"E	18.33
C99	27.00	42.41	90°00'00"	27.00	N45°00'00"W	38.18
C100	27.00	42.41	90°00'00"	27.00	S45°00'00"W	38.18
C101	175.00	16.19	5°17'57"	8.10	N02°38'58"E	16.18
C102	175.00	24.08	7°52'57"	12.06	N09°14'25"E	24.06
C103	175.00	27.29	8°56'03"	13.67	N17°38'55"E	27.26
C104	175.00	27.29	8°56'03"	13.67	N26°34'58"E	27.26
C105	175.00	24.08	7°52'57"	12.06	N34°59'28"E	24.06
C106	175.00	24.08	7°52'57"	12.06	N42°52'25"E	24.06
C107	175.00	27.29	8°56'03"	13.67	N51°16'55"E	27.26
C108	175.00	27.29	8°56'03"	13.67	N60°12'57"E	27.26
C109	175.00	24.08	7°52'57"	12.06	N68°37'27"E	24.06
C110	175.00	24.08	7°52'57"	12.06	N76°30'24"E	24.06
C111	175.00	27.29	8°56'03"	13.67	N84°54'54"E	27.26
C112	175.00	27.29	8°56'03"	13.67	S86°09'03"E	27.26
C113	175.00	24.08	7°52'57"	12.06	S77°44'33"E	24.06
C114	175.00	16.19	5°17'57"	8.10	S71°09'07"E	16.18
C115	150.00	291.90	111°29'52"	220.30	N55°44'56"E	247.97
C120	27.00	42.41	90°00'00"	27.00	S66°29'52"W	38.18
C121	27.00	42.41	90°00'00"	27.00	S23°30'08"E	38.18
C142	133.00	129.41	55°44'56"	70.34	N27°52'28"E	124.36
C143	133.00	129.41	55°44'56"	70.34	N83°37'24"E	124.36
C144	27.00	37.94	80°30'21"	22.86	S55°04'17"W	34.89
C145	150.00	95.47	36°28'00"	49.41	N86°35'07"E	93.87
C146	27.00	50.69	107°34'15"	36.87	S38°58'01"E	43.57
C147	167.00	78.62	26°58'21"	40.05	N81°50'17"E	77.89
C148	133.00	43.86	18°53'45"	22.13	N77°47'59"E	43.66
C149	133.00	29.28	12°36'44"	14.70	S74°39'29"W	29.22
C150	133.00	36.10	15°33'11"	18.16	S88°44'26"W	35.99
C151	150.00	19.93	7°36'44"	9.98	S72°09'29"W	19.91
C152	150.00	53.81	20°33'11"	27.20	S86°14'26"W	53.52
C153	167.00	28.52	9°47'03"	14.29	S73°14'38"W	28.48
C154	167.00	53.58	18°22'52"	27.02	S87°19'36"W	53.35
C155	167.00	41.77	14°19'54"	21.00	N89°21'05"E	41.66
C156	167.00	8.31	2°51'08"	4.16	N80°45'34"E	8.31
C157	167.00	231.08	79°16'52"	138.35	N39°41'34"E	213.08
C158	150.00	41.88	15°59'50"	21.08	N88°31'07"E	41.74
C159	150.00	8.39	3°12'23"	4.20	N78°55'01"E	8.39
C160	150.00	202.27	77°15'42"	119.88	N38°40'59"E	187.29

CURVE TABLE

CURVE TABLE						
CURVE	RAD	LEN	DELTA	TAN	CHORD	
C161	133.00	42.03	18°06'30"	21.19	N87°27'47"E	41.86
C162	133.00	8.51	3°40'01"	4.26	N76°34'32"E	8.51
C163	133.00	173.38	74°41'23"	101.48	N37°23'50"E	161.36
C164	183.00	165.85	51°55'34"	89.11	S26°00'55"W	160.23
C165	200.00	181.26	51°55'34"	97.39	S26°00'55"W	175.12
C166	217.00	196.66	51°55'34"	105.67	S26°00'55"W	190.00
C167	275.00	95.30	19°51'23"	48.13	N42°03'01"E	94.83
C168	275.00	46.71	9°43'57"	23.41	N27°15'21"E	46.66
C169	250.00	152.95	35°03'13"	78.95	N34°27'06"E	150.58
C170	225.00	105.06	26°45'11"	53.50	N38°36'07"E	104.11
C171	27.00	35.94	76°15'57"	21.20	S60°31'21"W	33.34
C172	27.00	43.35	91°59'04"	27.95	N20°46'00"W	38.84

LINE TABLE

LINE	LENGTH	BEARING
L2	36.56	S00°57'06"E
L3	13.04	N84°44'58"W
L4	20.43	N84°44'58"W
L5	14.41	S73°13'26"E
L6	6.47	S73°13'26"E
L7	17.00	S83°28'58"E
L8	100.00	N06°31'02"E
L9	17.00	N83°28'58"W
L10	108.26	N15°44'07"E
L11	2.74	S65°50'00"E
L13	31.62	S21°40'28"E
L15	28.91	S78°42'17"E
L16	273.58	S78°42'17"E
L17	6.05	S78°42'17"E
L18	114.32	S31°27'44"W
L19	115.41	S31°19'13"W
L20	100.00	S29°58'41"W
L21	100.00	S28°57'41"W
L22	100.00	S27°49'41"W
L23	127.11	S26°44'28"W
L24	172.88	S25°20'24"W
L25	125.00	S23°51'41"W
L26	134.01	S65°50'00"E
L27	70.01	S65°50'00"E
L28	70.01	S65°50'00"E
L29	129.04	S65°50'00"E
L30	318.33	N65°36'20"E
L31	198.53	N08°50'19"W
L32	26.72	N00°57'06"W
L33	31.35	N00°57'06"W
L34	55.11	N17°27'06"W
L35	43.73	N65°36'20"E
L36	40.02	S65°50'00"E
L37	30.00	S65°50'00"E
L38	59.02	S65°50'00"E
L39	13.29	N00°57'06"W
L40	18.06	N00°57'06"W
L41	231.61	S25°53'05"W
L42	71.84	S25°53'05"W
L43	174.85	S25°53'05"W
L44	101.93	S25°53'05"W
L45	105.97	S25°53'05"W
L46	132.02	S25°53'05"W
L47	52.41	S34°15'04"E
L48	79.91	S34°15'04"E
L49	52.41	S34°15'04"E
L50	13.72	N90°00'00"W
L51	36.00	N90°00'00"W
L52	24.00	N90°00'00"W
L53	24.00	N90°00'00"W
L54	24.00	N90°00'00"W
L55	41.19	N90°00'00"W
L56	15.00	N90°00'00"W
L57	15.00	N90°00'00"W
L58	36.48	N90°00'00"W
L59	10.18	N90°00'00"W
L60	205.41	N90°00'00"E
L61	61.66	N90°00'00"E
L62	118.01	N90°00'00"W
L63	9.66	N90°00'00"W
L64	18.30	S01°44'36"E
L65	18.30	S01°44'36"E
L66	18.30	S01°44'36"E
L67	2.86	S66°45'33"E
L68	18.30	N66°45'33"W
L69	18.30	S66°45'33"E
L70	21.85	N21°29'52"E
L71	24.00	N21°29'52"E
L72	36.00	N21°29'52"E
L73	36.00	N21°29'52"E
L74	24.00	N21°29'52"E
L75	24.00	N21°29'52"E
L76	24.00	N21°29'52"E
L77	36.00	N21°29'52"E
L78	13.72	N21°29'52"E
L79	61.66	N21°29'52"E
L80	205.41	N21°29'52"E
L81	9.66	N21°29'52"E
L82	118.01	N21°29'52"E
L83	26.56	S38°24'18"W
L84	13.21	S38°24'18"W
L85	232.66	S05°22'13"W

LINE TABLE

LINE	LENGTH	BEARING
L86	50.00	S05°22'13"W
L87	50.00	S49°32'57"E
L88	2.00	S49°32'57"E
L89	44.63	S15°50'23"W
L90	48.22	S00°00'00"E
L91	25.00	S00°00'00"E
L92	23.73	N80°55'33"W
L93	78.21	N80°55'33"W
L94	22.75	N80°55'33"W
L95	21.51	N00°00'00"E
L96	7.87	N00°00'00"E
L97	81.38	S00°00'00"E
L104	7.87	N68°30'08"W
L105	21.51	N68°30'08"W
L106	81.38	N68°30'08"W
L121	37.85	N65°36'20"E
L122	39.12	N65°36'20"E
L123	39.12	N65°36'20"E
L124	183.44	N65°36'20"E
L125	18.80	N65°36'20"E
L126	113.81	S16°54'05"W
L127	117.65	S16°54'05"W
L128	118.20	S16°54'05"W
L129	116.41	S16°54'05"W
L130	112.08	S16°54'05"W
L131	87.60	N16°54'05"E
L132	37.06	N86°51'48"W
L133	24.71	N86°51'48"W
L134	24.71	N86°51'48"W
L135	24.71	N86°51'48"W
L136	37.06	N86°51'48"W
L137	108.56	N03°17'33"W
L138	100.99	N03°17'33"W
L139	97.54	N03°17'33"W
L140	95.90	N03°17'33"W
L141	96.76	S03°17'33"E
L142	101.67	N03°17'33"W
L143	103.90	N03°17'33"W
L144	95.17	N03°17'33"W
L145	103.54	S03°17'33"E
L146	36.00	N86°42'27"E
L147	24.00	N86°42'27"E
L148	24.00	N86°42'27"E
L149	36.00	N86°42'27"E
L150	36.00	N86°42'27"E
L151	24.00	N86°42'27"E
L152	24.00	N86°42'27"E
L153	36.00	N86°42'27"E
L154	134.79	S05°07'34"W
L155	117.96	S05°07'34"W
L156	111.48	S05°07'34"W
L157	108.39	S05°07'34"W
L158	108.30	S05°07'34"W
L159	108.80	N02°53'45"E
L160	36.09	S88°53'17"E
L161	24.06	S88°53'17"E
L162	24.06	S88°53'17"E
L163	24.06	S88°53'17"E
L164	40.67	S88°53'17"E
L165	107.81	N00°00'00"W
L166	107.81	S00°00'00"E
L167	107.81	S00°00'00"W
L168	107.81	S00°00'00"W
L169	107.81	S00°00'00"W
L170	107.81	N00°00'00"E
L171	41.19	N90°00'00"E
L172	24.00	N90°00'00"E
L173	24.00	N90°00'00"E
L174	24.00	N90°00'00"E
L175	36.00	N90°00'00"E
L176	107.81	N68°30'08"W

LINE TABLE

LINE	LENGTH	BEARING
L177	107.81	S68°30'08"E
L178	107.81	S68°30'08"E
L179	107.81	S68°30'08"E
L180	107.81	S68°30'08"E
L181	107.81	S68°30'08"E
L182	107.81	S68°30'08"E
L183	107.81	S68°30'08"E
L184	107.82	S68°30'08"E
L185	109.77	S68°30'08"E
L186	98.58	N86°29'00"W
L187	103.33	N73°21'45"E
L188	100.00	N73°21'45"E
L189	100.00	N73°21'45"E
L190	103.33	N73°21'45"E
L191	115.09	S73°21'45"W
L192	36.00	S21°29'52"W
L193	24.00	S21°29'52"W
L194	24.00	S21°29'52"W
L195	24.00	S21°29'52"W
L196	36.00	S21°29'52"W
L197	36.00	N21°29'52"E
L198	24.00	N21°29'52"E
L199	24.00	N21°29'52"E
L200	24.00	N21°29'52"E
L201	62.53	S00°19'02"W
L202	60.91	S00°19'02"W
L203	24.00	N16°38'15"W
L204	24.00	N16°38'15"W
L205	24.00	N16°38'15"W
L206	36.00	N16°38'15"W
L207	102.26	N84°42'03"W
L208	102.79	N84°42'03"W
L209	106.45	N84°42'03"W
L210	122.73	S67°53'03"E
L211	111.65	N51°04'04"W
L212	110.00	N51°04'04"W
L213	111.65	N51°04'04"W
L214	122.73	S34°15'04"E
L215	111.65	N17°26'04"W
L216	110.00	N17°26'04"W
L217	111.65	N17°26'04"W
L218	122.73	S00°37'05"E
L219	106.45	N16°11'55"E
L220	102.79	N16°11'55"E
L221	102.26	N16°11'55"E
L222	39.41	S00°30'59"W
L223	24.08	S00°30'59"W
L224	24.08	S00°30'59"W
L225	62.35	S00°30'59"W
L226	62.14	S38°55'56"W
L227	24.00	S38°55'56"W
L228	24.00	S38°55'56"W
L229	62.14	S38°55'56"W
L230	62.14	N72°33'56"E
L231	24.00	N72°33'56"E
L232	24.00	N72°33'56"E
L233	62.14	N72°33'56"E
L234	62.35	S69°01'07"E

LINE TABLE

LINE	LENGTH	BEARING
L235	24.08	S69°01'07"E
L236	24.08	S69°01'07"E
L237	39.41	S69°01'07"E
L238	89.99	N77°33'33"E
L239	133.63	S81°50'10"E
L240	123.99	N65°13'00"W
L241	74.91	S47°35'37"E
L242	152.14	S17°32'04"E
L243	131.52	S20°37'46"W
L244	99.77	N38°51'55"E
L245	49.89	N85°38'09"E
L246	74.91	S20°54'32"E
L247	122.49	S15°31'24"E
L248	113.41	S41°48'43"E
L257	49.89	S25°51'43"W
L258	81.70	S72°37'57"W
L259	69.86	S72°37'57"W
L260	103.75	N38°31'11"E
L266	126.98	N52°12'02"E
L267	401.87	S52°12'02"W
L268	236.26	S06°31'02"W
L271	230.33	N06°31'02"E
L282	111.40	N75°12'48"W
L285	1.55	S38°24'18"W
L286	11.27	N00°00'00"E
L287	8.00	N90°00'00"W
L288	18.12	N00°00'00"E
L289	18.12	N68°30'08"W
L290	8.00	N21°29'52"E
L291	11.27	N68°30'08"W
L292	251.51	N14°49'07"E
L293	448.49	N14°49'07"E
L294	109.04	N14°47'12"E
L295	57.45	N14°47'12"E
L296	65.37	N14°47'12"E
L298	305.92	N06°31'02"E
L299	99.57	S06°31'02"W
L300	0.43	S06°31'02"W
L301	17.00	S83°28'58"E
L302	11.90	S06°31'02"W
L303	18.03	S06°31'02"W
L304	317.50	S06°31'02"W

LINE TABLE

LINE	LENGTH	BEARING
L306	12.35	N06°31'02"E
L307	17.61	N06°31'02"E
L308	17.78	N06°31'02"E
L309	302.39	N06°31'02"E
L310	13.21	N06°31'02"E
L311	17.89	N06°31'02"E
L312	18.14	N06°31'02"E
L313	299.49	N06°31'02"E
L314	8.12	N86°34'13"E
L315	291.92	N86°34'13"E
L316	19.00	S75°10'53"E
L317	1.00	S75°10'53"E
L318	5.97	N75°12'48"W
L319	6.04	N75°12'48"W
L320	16.11	N14°49'07"E
L321	16.43	N14°49'07"E
L322	109.45	N68°21'07"E
L323	109.45	N68°21'07"E
L324	93.76	N68°21'07"E
L325	15.69	N68°21'07"E
L326	30.00	S83°28'58"E
L327	30.00	S83°28'58"E
L328	30.00	S83°28'58"E
L329	16.01	N00°03'08"E
L330	66.44	N00°03'08"E
L331	82.46	N00°03'08"E
L332	82.46	N00°03'08"E
L333	10.96	N55°14'56"E
L334	89.65	N55°14'56"E

LINE TABLE

LINE	LENGTH	BEARING
L335	39.62	N55°14'56"E
L336	204.08	N51°58'42"E
L337	140.23	S48°42'29"W
L338	64.08	S51°58'42"W
L339	64.08	N51°58'42"E
L340	19.58	S16°55'30"W
L341	120.96	S38°01'18"E
L342	103.65	N50°51'57"E
L343	125.24	N38°01'18"W
L344	110.60	N39°31'42"E
L345	155.30	S31°10'54"E
L346	180.41	S62°18'51"W
L347	321.04	N14°47'12"E
L348	15.01	N15°10'26"E
L349	36.53	N15°10'26"E

Jul 27, 2021 Z:\Prj-7000\7680\Banzhoff\Pre\dwg\7680C-2.dwg

architecture
engineering
landscape architecture
planning
surveying

melham
ASSOCIATES, PC

2247 North Front Street
Harrisburg, PA 17110

tel 717 238 5000

fax 717 236 2600

www.melham.com

CLIENT

Estate of
Martha Joan Banzhoff
c/o Harry G. Banzhoff,
Executor

2308 STUMPSTOWN ROAD
MECHANICSBURG, PA 17055
(717) 691-5572

PROJECT

Banzhoff Tract

UPPER ALLEN TOWNSHIP, CUMBERLAND COUNTY, PA

PHASE

PRELIMINARY

DRAWING

OVERALL SITE PLAT
AND TABLES

© 2021 MELHAM ASSOCIATES PC

SCALE

1" = 100'

JOB #

7680

CADD

7680C-2.dwg

DATE

7/27/21

SHEET

C-2.0

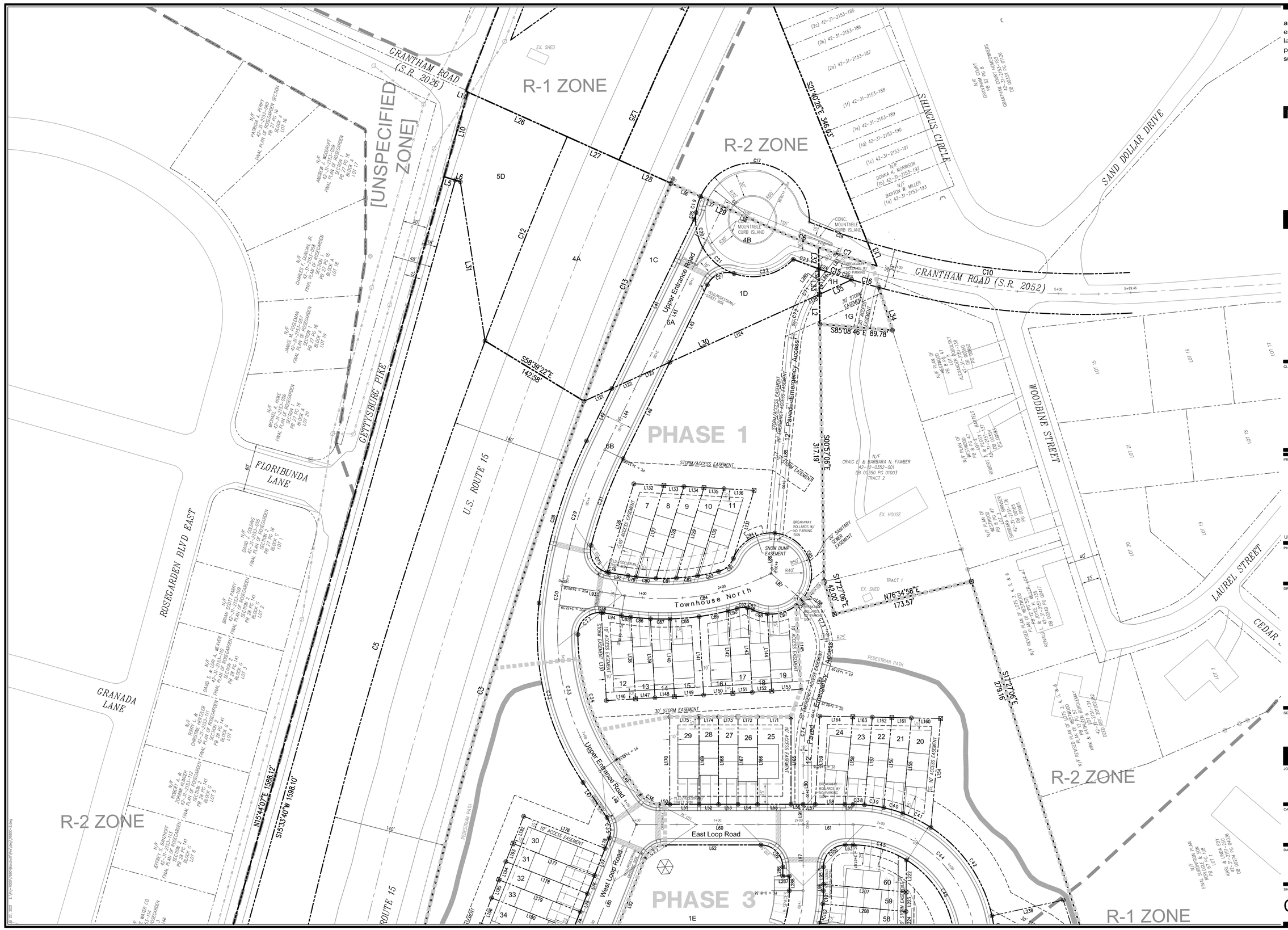

architecture
engineering
landscape architecture
planning
surveying

melham ASSOCIATES, PC

2247 North Front Street
Harrisburg, PA 17110

tel 717 238 5000

fax 717 236 2600

www.melham.com

0 10 20 30 40 50

CLIENT

Estate of
Martha Joan Banzhoff
c/o Harry G. Banzhoff,
Executor

2308 STUMPSTOWN ROAD
MECHANICSBURG, PA 17055
(717) 691-5572

PROJECT

Banzhoff Tract

UPPER ALLEN TOWNSHIP, CUMBERLAND COUNTY, PA

PHASE

PRELIMINARY

DRAWING

PLAT AND PLAN
SHEET 1 OF 3

© 2021 MELHAM ASSOCIATES PC

SCALE

1" = 50'

JOB #

7680

CADD

7680C-2.dwg

DATE

7/27/21

SHEET

C-2.1

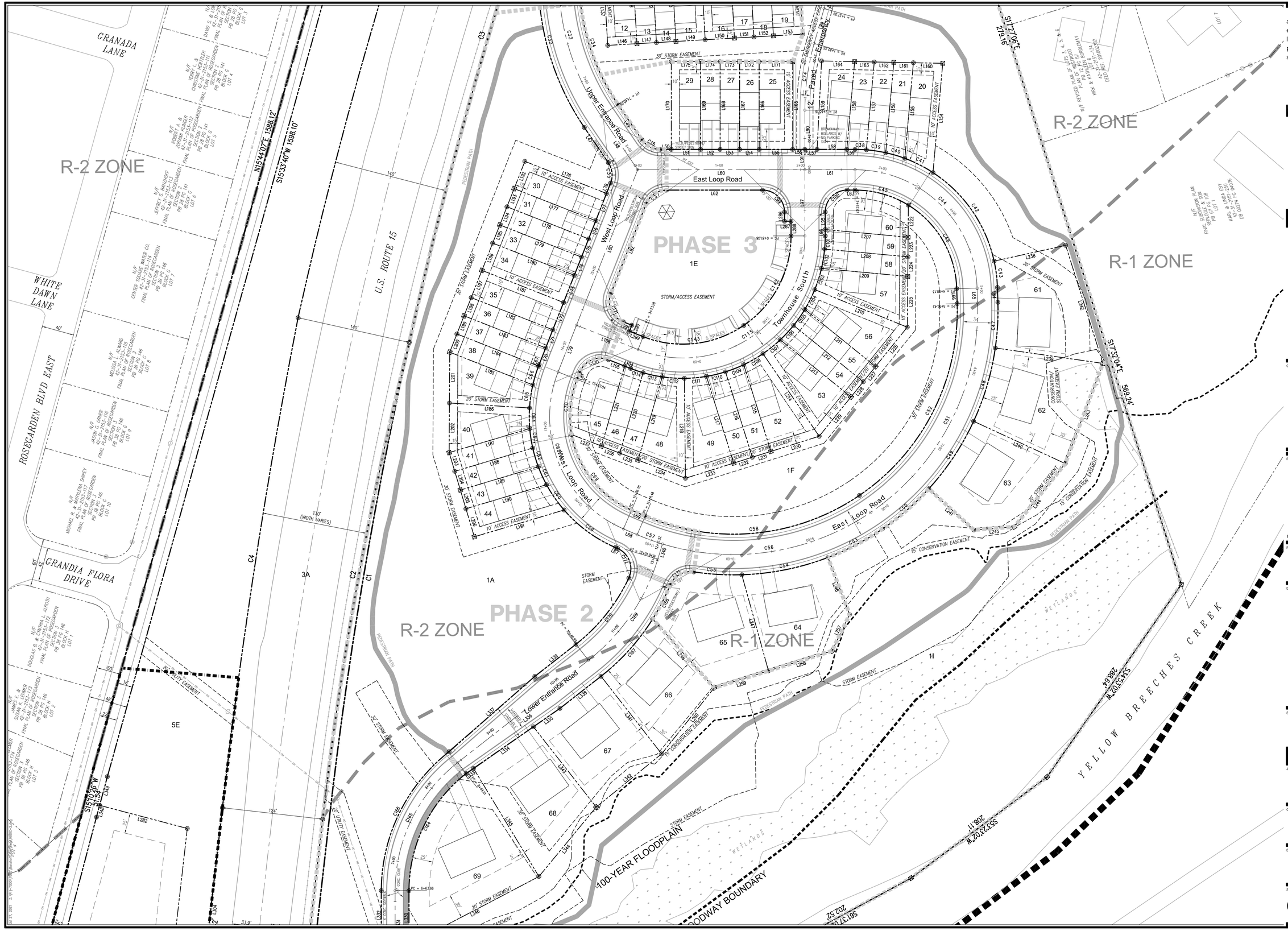

architecture
engineering
landscape architecture
planning
surveying

melham
ASSOCIATES, PC

2247 North Front Street
Harrisburg, PA 17110

tel 717 238 5000

fax 717 236 2600

www.melham.com

0 10 20 30 40 50

CLIENT

Estate of
Martha Joan Banzhoff
c/o Harry G. Banzhoff,
Executor

2308 STUMPSTOWN ROAD
MECHANICSBURG, PA 17055
(717) 691-5572

PROJECT

Banzhoff Tract

UPPER ALLEN TOWNSHIP, CUMBERLAND COUNTY, PA

PHASE

PRELIMINARY

DRAWING

PLAT AND PLAN
SHEET 2 OF 3

© 2021 MELHAM ASSOCIATES PC

SCALE

1" = 50'

JOB #

7680

CADD

7680C-2.dwg

DATE

7/27/21

SHEET

C-2.2

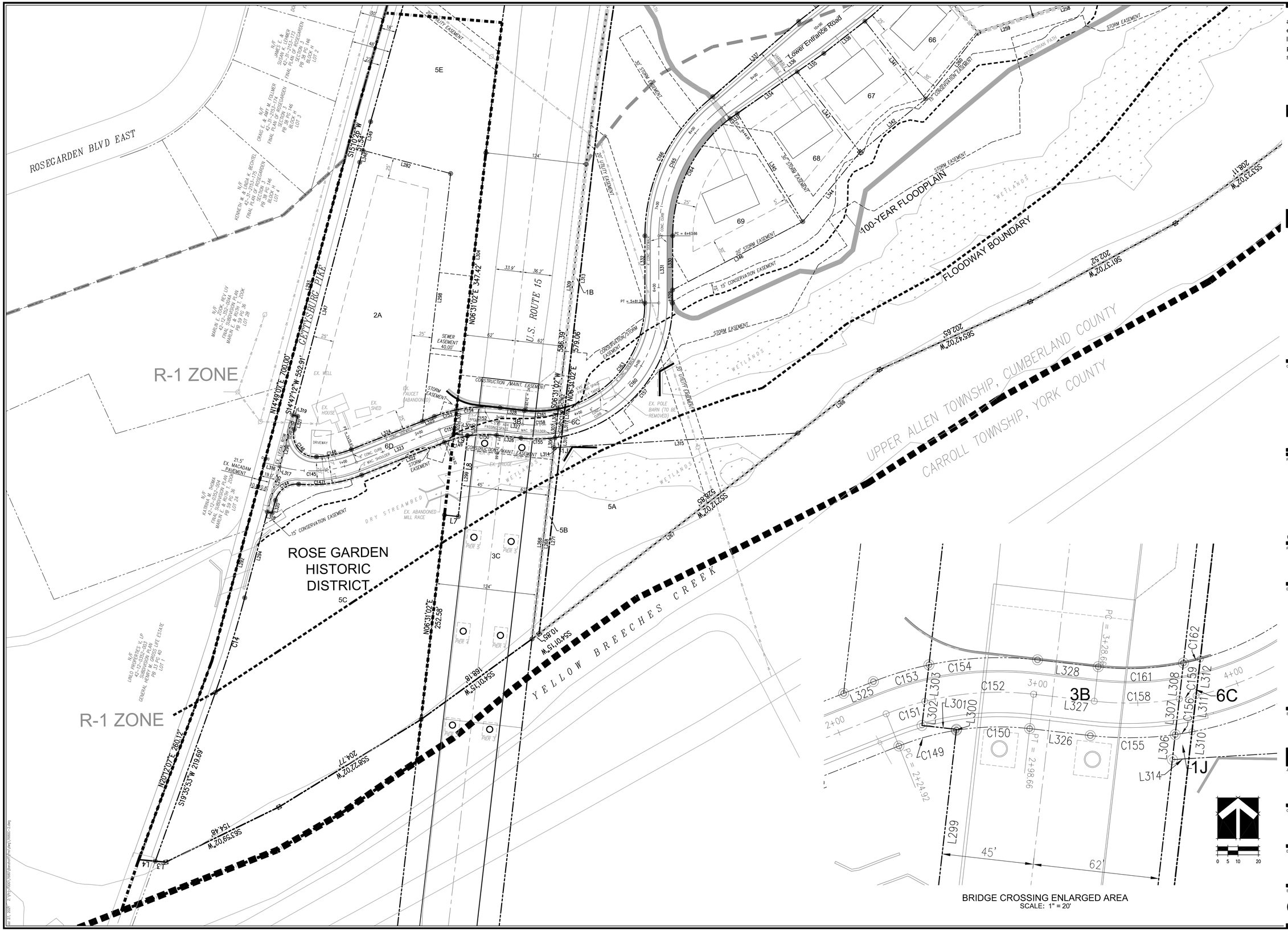

architecture
engineering
landscape architecture
planning
surveying

melham ASSOCIATES, PC

2247 North Front Street
Harrisburg, PA 17110

tel 717 238 5000

fax 717 236 2600

www.melham.com

0 10 20 30 40 50

CLIENT

Estate of
Martha Joan Banzhoff
c/o Harry G. Banzhoff,
Executor

2308 STUMPSTOWN ROAD
MECHANICSBURG, PA 17055
(717) 691-5572

PROJECT

Banzhoff Tract

UPPER ALLEN TOWNSHIP, CUMBERLAND COUNTY, PA

PHASE

PRELIMINARY

DRAWING

PLAT AND PLAN
SHEET 3 OF 3

© 2021 MELHAM ASSOCIATES PC

SCALE

1" = 50'

JOB #

7680

CADD

7680C-2.dwg

DATE

7/27/21

SHEET

C-2.3

LEGEND

- RIGHT-OF-WAY LINE
- PROPERTY LINE
- ADJOINING PROPERTY LINE
- EXISTING ROAD CENTER LINE
- BUILDING SEPARATION LINE
- EXISTING EASEMENT LINE
- 420 EXISTING CONTOUR LINE
- EXISTING EDGE OF PAVEMENT
- TOWNSHIP/BORO/COUNTY LINE
- SOIL BOUNDARY LINE
- EX. MH-10 EXISTING SANITARY SEWER/MANHOLE
- ES-1 STORM PIPE END SECTION
- EXISTING STORM SEWER
- EX. CB-30 EXISTING STORM INLET
- EXISTING WATER LINE
- WV EXISTING WATER VALVE
- FH EXISTING FIRE HYDRANT
- PWL Pole # 20/6/20889 EXISTING ELECTRIC WITH UTILITY POLE
- EXISTING CONCRETE CURB
- EXISTING TREE LINE
- EXISTING TREE
- PROPERTY CORNER
- PROPOSED CONCRETE MONUMENT
- EXISTING SLOPES > 15%
- EXISTING STRUCTURES OR FEATURES
- EXISTING FENCE LINE
- 2506 SOIL TEST LOCATION

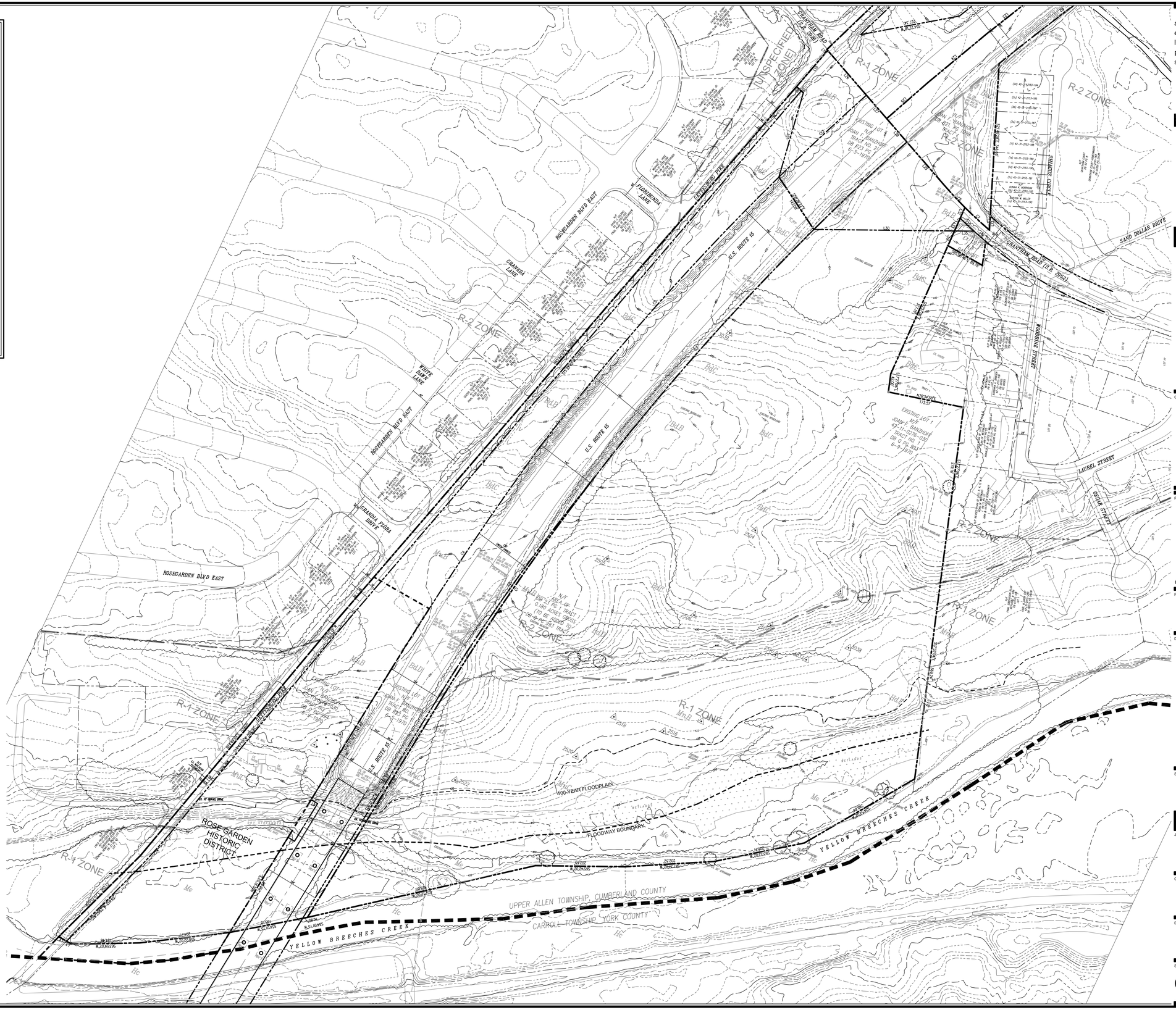

architecture
engineering
landscape architecture
planning
surveying

melham ASSOCIATES, PC

2247 North Front Street
Harrisburg, PA 17110

tel 717 238 5000

fax 717 236 2600

www.melham.com

CLIENT

Estate of
Martha Joan Banzhoff
c/o Harry G. Banzhoff,
Executor

2308 STUMPSTOWN ROAD
MECHANICSBURG, PA 17055
(717) 691-5572

PROJECT

Banzhoff Tract

UPPER ALLEN TOWNSHIP, CUMBERLAND COUNTY, PA

PHASE

PRELIMINARY

DRAWING

OVERALL EXISTING CONDITIONS

© 2021 MELHAM ASSOCIATES PC

SCALE

1" = 100'

JOB #

7680

CADD

7680C-3.dwg

DATE

7/27/21

SHEET

C-3.0

Jul 27, 2021 - 2:47pm S:\7680\Engineering\7680C-3.dwg

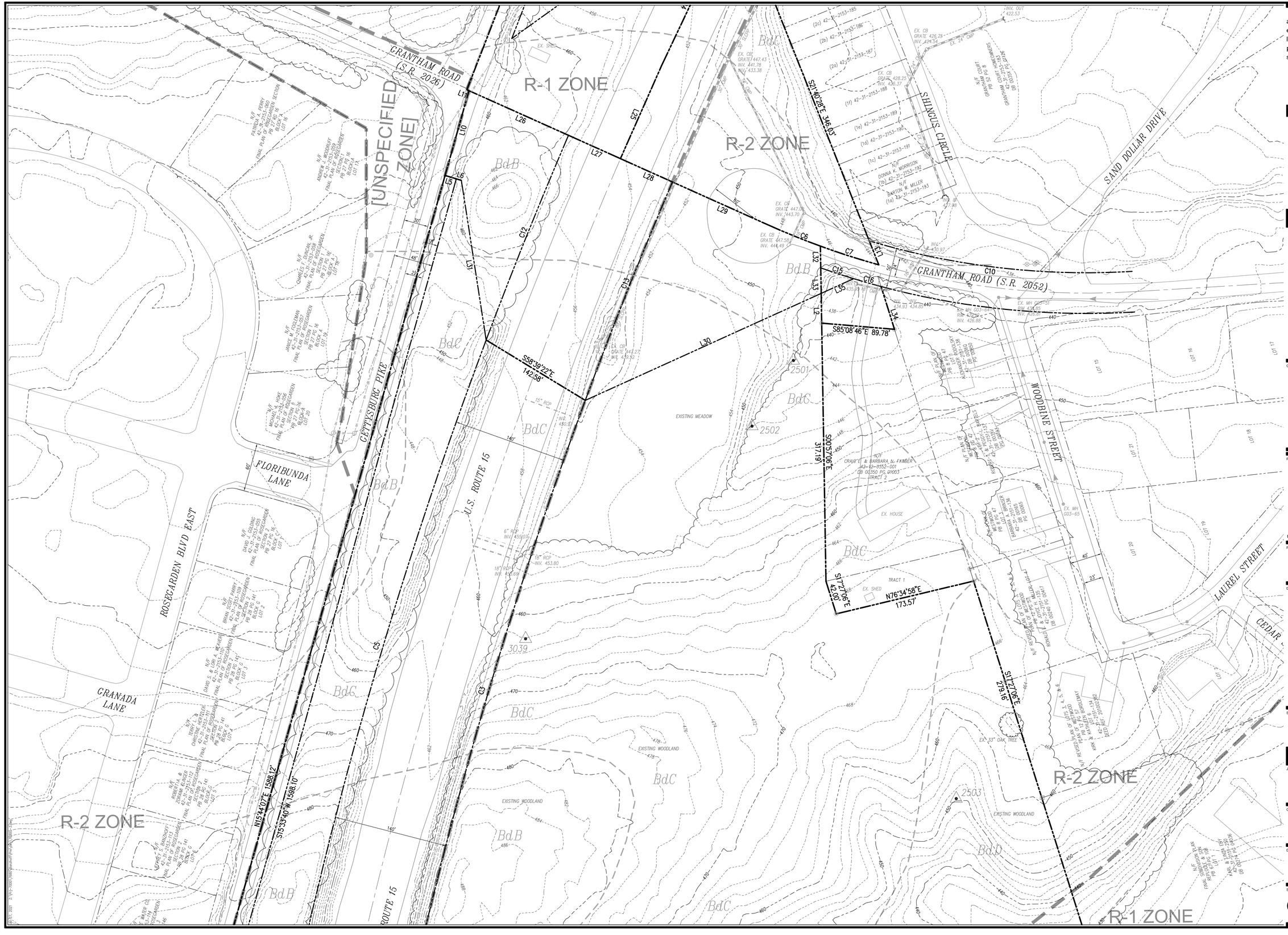

architecture
engineering
landscape architecture
planning
surveying

melham ASSOCIATES, PC

2247 North Front Street
Harrisburg, PA 17110

tel 717 238 5000

fax 717 236 2600

www.melham.com

0 10 20 30 40 50

CLIENT

Estate of
Martha Joan Banzhoff
c/o Harry G. Banzhoff,
Executor

2308 STUMPSTOWN ROAD
MECHANICSBURG, PA 17055
(717) 691-5572

PROJECT

Banzhoff Tract

UPPER ALLEN TOWNSHIP, CUMBERLAND COUNTY, PA

PHASE

PRELIMINARY

DRAWING

EXISTING CONDITIONS
PLAN
SHEET 1 OF 3

© 2021 MELHAM ASSOCIATES PC

SCALE

1" = 50'

JOB #

7680

CADD

7680C-3.dwg

DATE

7/27/21

SHEET

C-3.1

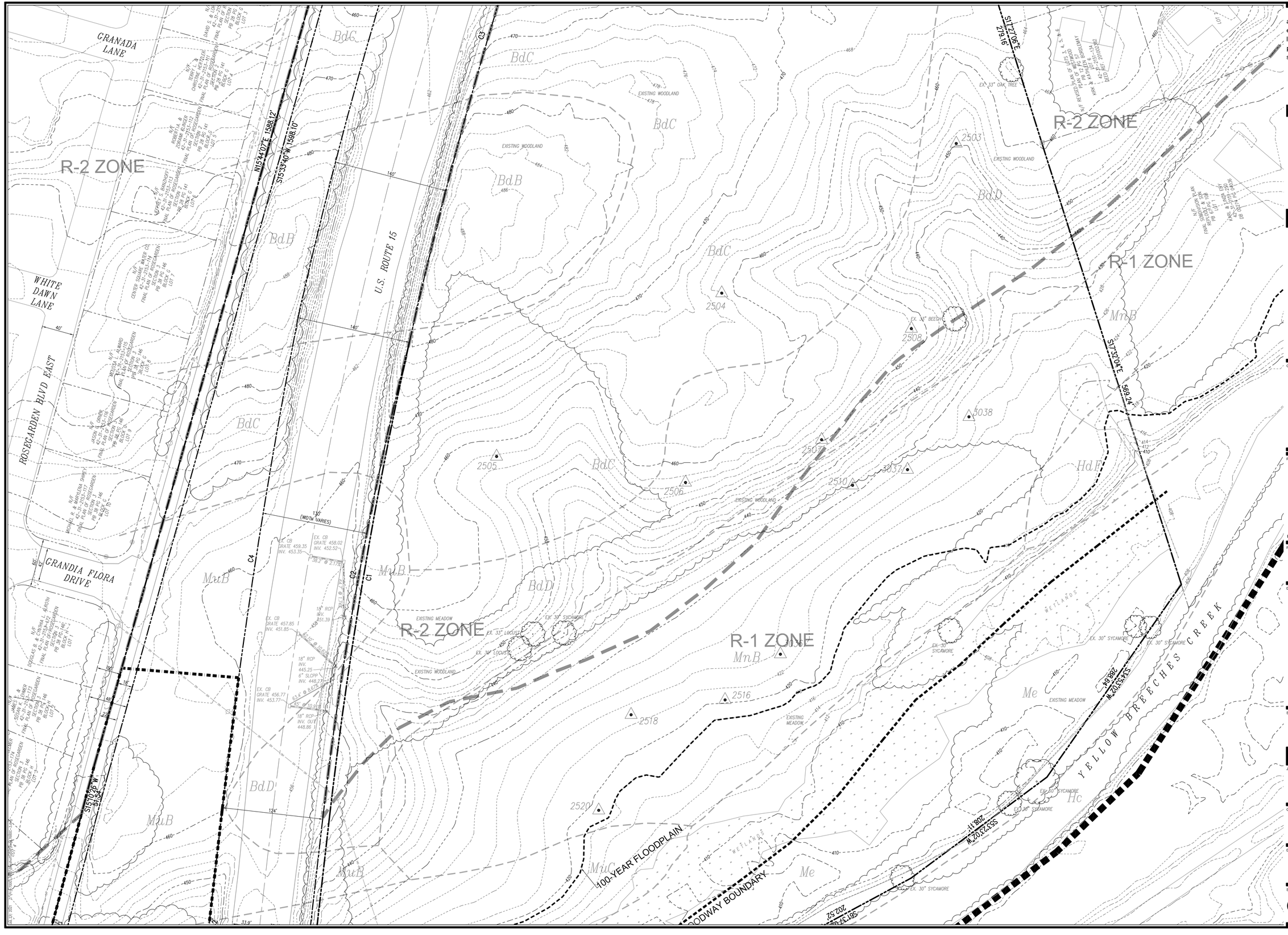

architecture
engineering
landscape architecture
planning
surveying

melham ASSOCIATES, PC

2247 North Front Street
Harrisburg, PA 17110

tel 717 238 5000

fax 717 236 2600

www.melham.com

0 10 20 30 40 50

CLIENT

Estate of
Martha Joan Banzhoff
c/o Harry G. Banzhoff,
Executor

2308 STUMPSTOWN ROAD
MECHANICSBURG, PA 17055
(717) 691-5572

PROJECT

Banzhoff Tract

UPPER ALLEN TOWNSHIP, CUMBERLAND COUNTY, PA

PHASE

PRELIMINARY

DRAWING

EXISTING CONDITIONS
PLAN
SHEET 2 OF 3

© 2021 MELHAM ASSOCIATES PC

SCALE

1" = 50'

JOB #

7680

CADD

7680C-3.dwg

DATE

7/27/21

SHEET

C-3.2



architecture
engineering
landscape architecture
planning
surveying

melham
ASSOCIATES, PC

2247 North Front Street
Harrisburg, PA 17110

tel 717 238 5000

fax 717 236 2600

www.melham.com

0 10 20 30 40 50

CLIENT

Estate of
Martha Joan Banzhoff
c/o Harry G. Banzhoff,
Executor

2308 STUMPSTOWN ROAD
MECHANICSBURG, PA 17055
(717) 691-5572

PROJECT

Banzhoff Tract

UPPER ALLEN TOWNSHIP, CUMBERLAND COUNTY, PA

PHASE

PRELIMINARY

DRAWING

EXISTING CONDITIONS
PLAN
SHEET 3 OF 3

© 2021 MELHAM ASSOCIATES PC

SCALE

1" = 50'

JOB #

7680

CADD

7680C-3.dwg

DATE

7/27/21

SHEET

C-3.3

LEGEND

- RIGHT-OF-WAY LINE
- PROPERTY LINE
- ADJOINING PROPERTY LINE
- PROPOSED PROPERTY LINE
- EXISTING ROAD CENTER LINE
- PROPOSED ROAD CENTER LINE
- BUILDING SEPARATION LINE
- EXISTING EASEMENT LINE
- PROPOSED EASEMENT LINE
- 420 EXISTING CONTOUR LINE
- 420 PROPOSED CONTOUR LINE
- EXISTING EDGE OF PAVEMENT
- PROPOSED EDGE OF PAVEMENT
- CLEAR SIGHT TRIANGLE
- TOWNSHIP/BORO/COUNTY LINE
- SOIL BOUNDARY LINE
- PHASE LINE
- EX. MH-10 EXISTING SANITARY SEWER/MANHOLE
- MH-14 PROPOSED SANITARY SEWER/MANHOLE
- (1+13) PROPOSED LATERAL – SINGLE WYE
- CO CLEANOUT
- ES-1 STORM PIPE END SECTION
- EXISTING STORM SEWER
- PROPOSED STORM SEWER
- PROPOSED UNDERDRAIN
- EX. CB-30 EXISTING STORM INLET
- CB-108 PROPOSED STORM INLET
- EXISTING WATER LINE
- PROPOSED WATER LINE
- WV EXISTING WATER VALVE
- WV PROPOSED WATER VALVE
- FH EXISTING FIRE HYDRANT
- FH PROPOSED FIRE HYDRANT
- EXISTING ELECTRIC WITH UTILITY POLE
- PROPOSED ELECTRIC WITH UTILITY POLE
- PROPOSED STREET LIGHT
- PROPOSED STREET SIGNS
- EXISTING CONCRETE CURB
- PROPOSED CONCRETE CURB
- EXISTING TREE LINE
- EXISTING TREE
- PROPOSED TREE
- PROPERTY CORNER
- PROPOSED CONCRETE MONUMENT
- EXISTING SLOPES > 15%
- EXISTING STRUCTURES OR FEATURES
- R1 R2 PROPOSED STRUCTURE
- EXISTING FENCE LINE
- PROPOSED FENCE LINE
- 12"CFS 12" COMPOST FILTER SOCK
- 18"CFS 18" COMPOST FILTER SOCK
- 32"CFS 32" COMPOST FILTER SOCK
- INFILTRATION BERM INFILTRATION BERM
- SCE STABILIZED CONSTRUCTION ENTRANCE
- IP INLET PROTECTION
- OUTLET STRUCTURE PROTECTION
- RF ROCK FILTER
- CW CONCRETE WASHOUT
- LIMIT OF CONSTRUCTION
- HDPE SMOOTH LINED CORRUGATED POLY PIPE
- CPP CORRUGATED POLY PIPE
- 2506 SOIL TEST LOCATION



architecture
engineering
landscape architecture
planning
surveying

melham ASSOCIATES, PC

2247 North Front Street
Harrisburg, PA 17110

tel 717 238 5000

fax 717 236 2600

www.melham.com

CLIENT

Estate of
Martha Joan Banzhoff
c/o Harry G. Banzhoff,
Executor

2308 STUMPSTOWN ROAD
MECHANICSBURG, PA 17055
(717) 691-5572

PROJECT

Banzhoff Tract

UPPER ALLEN TOWNSHIP, CUMBERLAND COUNTY, PA

PHASE

PRELIMINARY

DRAWING

EROSION AND SEDIMENTATION CONTROL PLAN
SHEET 1 OF 3

© 2021 MELHAM ASSOCIATES PC

SCALE

1" = 40'

JOB #

7680

CADD

7680C-4.dwg

DATE

7/27/21

SHEET

C-4.1

Jul 27, 2021 - 2:47pm - \\dfs1\data\projects\7680\cad\dwg\7680C-4.dwg



architecture
engineering
landscape architecture
planning
surveying

melham
ASSOCIATES, PC

2247 North Front Street
Harrisburg, PA 17110

tel 717 238 5000

fax 717 236 2600

www.melham.com

0 20 40

CLIENT

Estate of
Martha Joan Banzhoff
c/o Harry G. Banzhoff,
Executor

2308 STUMPSTOWN ROAD
MECHANICSBURG, PA 17055
(717) 691-5572

PROJECT

Banzhoff Tract

UPPER ALLEN TOWNSHIP, CUMBERLAND COUNTY, PA

PHASE

PRELIMINARY

DRAWING

EROSION AND SEDIMENTATION CONTROL PLAN
SHEET 2 OF 3

© 2021 MELHAM ASSOCIATES PC

SCALE

1" = 40'

JOB #

7680

CADD

7680C-4.dwg

DATE

7/27/21

SHEET

C-4.2

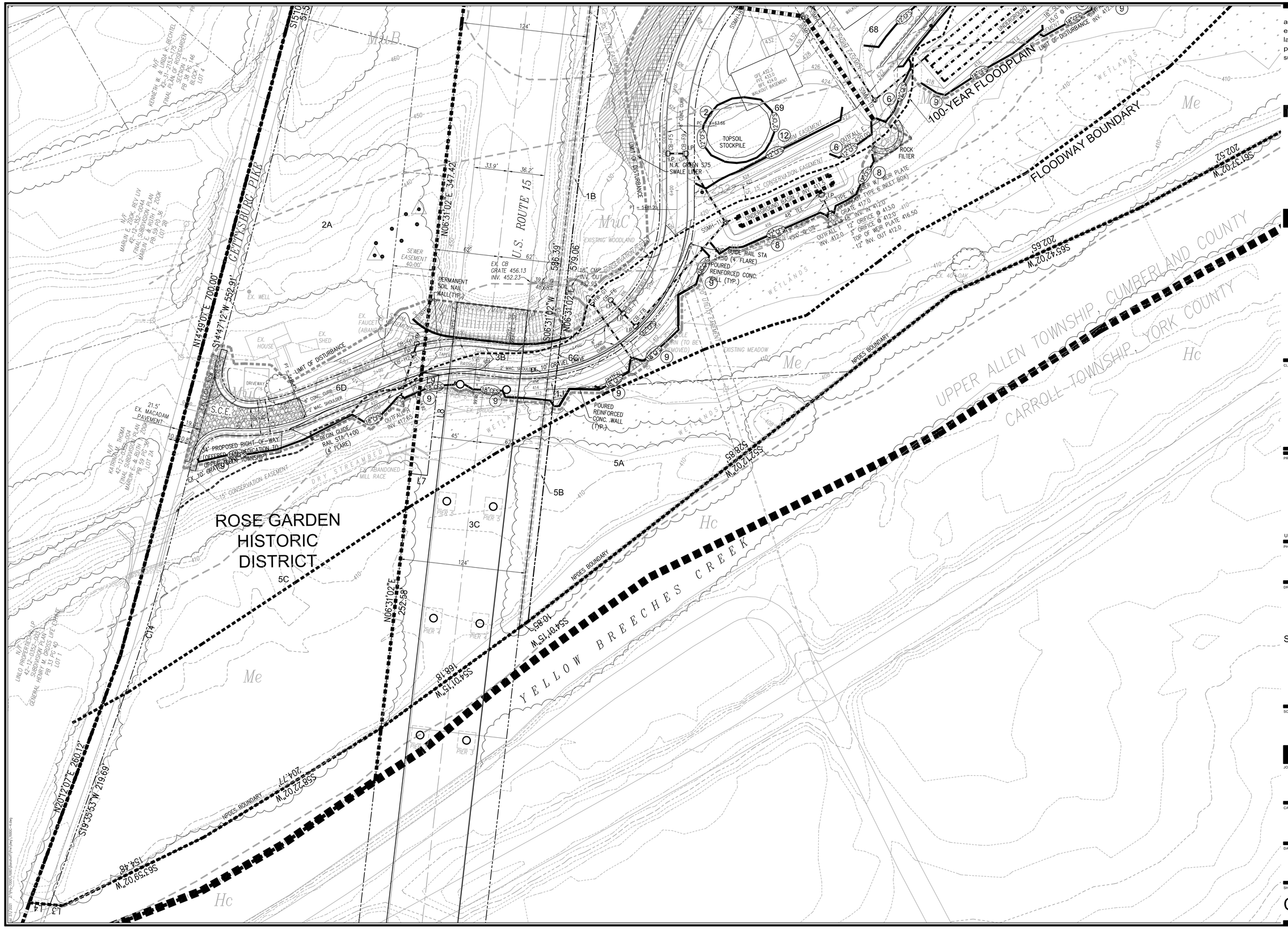

architecture
engineering
landscape architecture
planning
surveying

melham
ASSOCIATES, PC

2247 North Front Street
Harrisburg, PA 17110

tel 717 238 5000

fax 717 236 2600

www.melham.com

0 20 40

CLIENT

Estate of
Martha Joan Banzhoff
c/o Harry G. Banzhoff,
Executor

2308 STUMPSTOWN ROAD
MECHANICSBURG, PA 17055
(717) 691-5572

PROJECT

Banzhoff Tract

UPPER ALLEN TOWNSHIP, CUMBERLAND COUNTY, PA

PHASE

PRELIMINARY

DRAWING

EROSION AND SEDIMENTATION CONTROL PLAN
SHEET 3 OF 3

© 2021 MELHAM ASSOCIATES PC

SCALE

1" = 40'

JOB #

7680

CADD

7680C-4.dwg

DATE

7/27/21

SHEET

C-4.3

Stone Inlet Protection and Berm - Type C Inlet

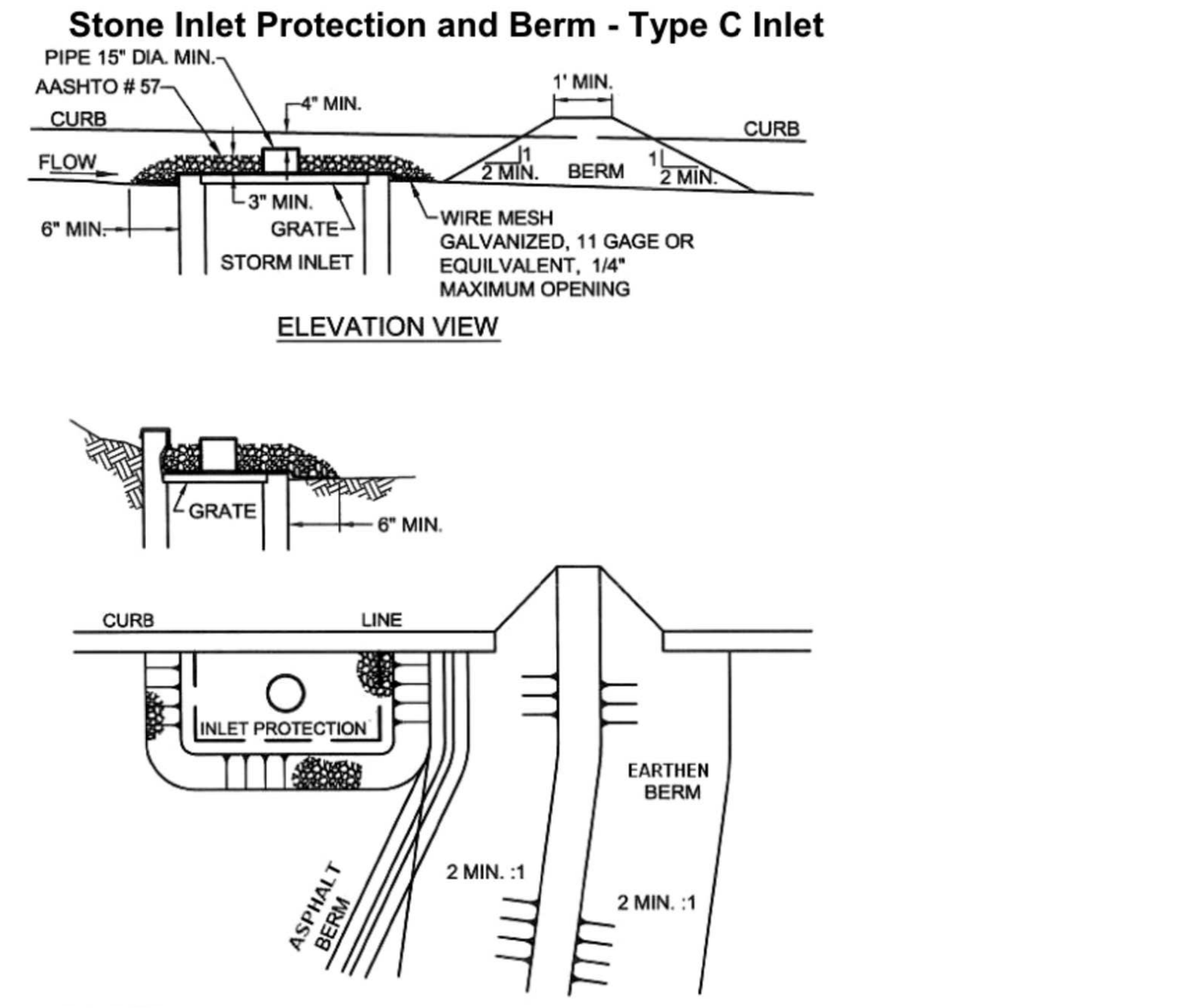

PA DEP

Inlet protection shall not be required for inlet tributary to sediment basin or trap. Berms shall be required for all installations.

Rolled earthen berm shall be provided and maintained immediately down gradient of the protected inlet until roadway is stoned. Road subbase berm shall be maintained until roadway is paved. A 6" minimum height asphalt berm shall be maintained until roadway surface receives final coat.

Stone inlet protection and berm for a Type C inlet can be used in one acre maximum drainage area with 15" overflow pipe and 4" head. A perforated plate welded to a metal riser may not be substituted for the wire mesh. A slotted plate welded to the riser may be used in conjunction with the wire mesh if calculations are provided to show sufficient capacity of the inlet to accept the peak runoff for a 2-year storm event from the tributary drainage area.

Sediment shall be removed when it reaches half the height of the stone. Damaged or clogged installations shall be repaired or replaced immediately.

For systems discharging to HQ or EV surface water, a 6" thick compost layer shall be securely anchored on outside and over top of stone. Compost shall meet the standards in Table 4.2.

DO NOT USE ON MAJOR PAVED ROADWAYS WHERE PONDING MAY CAUSE TRAFFIC HAZARDS.

STANDARD CONSTRUCTION DETAIL # 4-20
Stone Inlet Protection and Berm - Type M Inlet

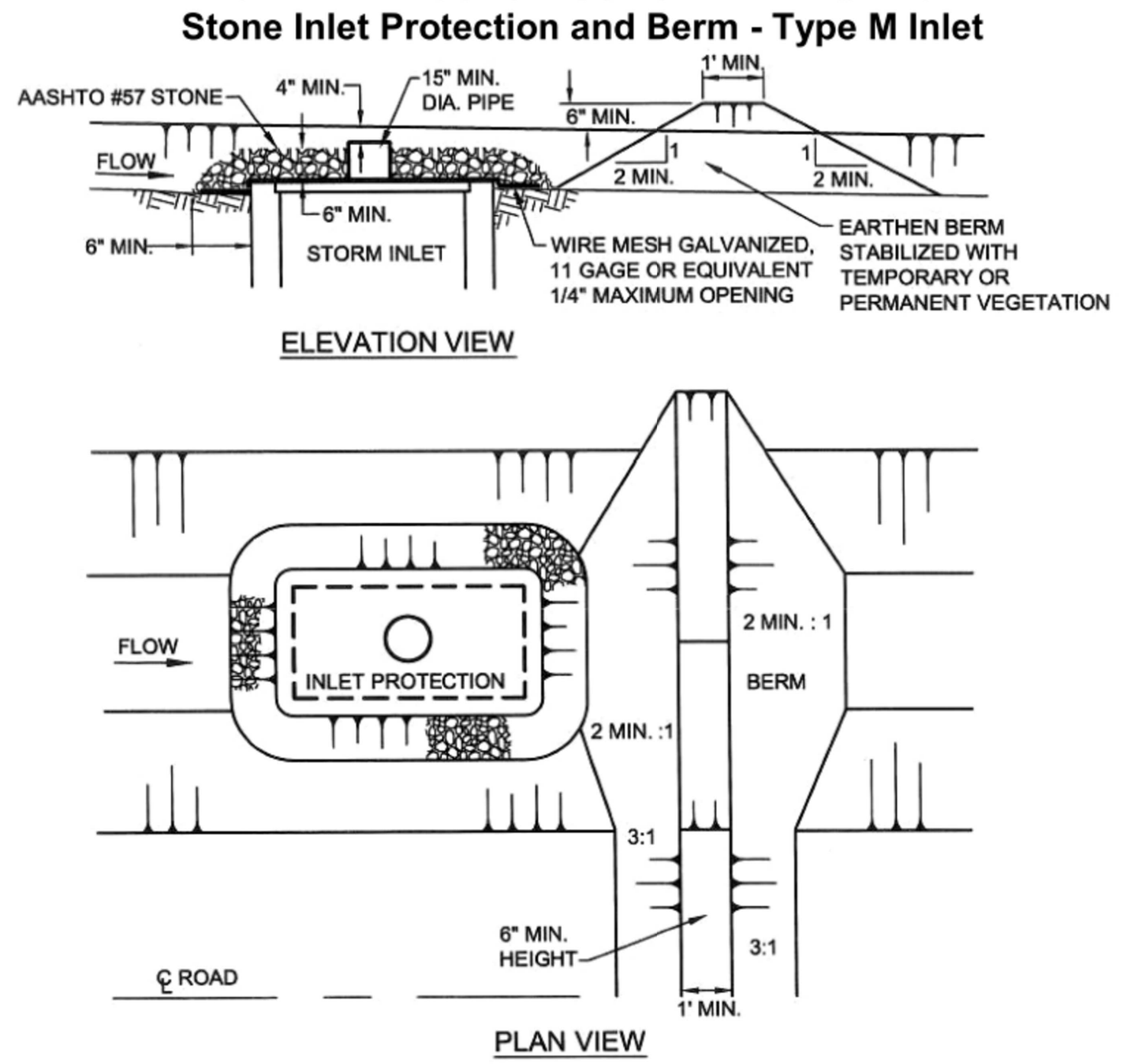

PA DEP

Inlet protection shall not be required for inlet tributary to sediment basin or trap. Berms shall be required for all installations not located at a low point.

Rolled earthen berm in roadway shall be provided and maintained immediately down gradient of the protected inlet until roadway is stoned. Road subbase berm on roadway shall be maintained until roadway is paved. Earthen berm in channel shall be maintained until permanent stabilization is completed or to remain permanently

Stone inlet protection and berm for a Type M Inlet can be used in one acre maximum drainage area with 15" overflow pipe and 4" head. A perforated plate welded to a metal riser may not be substituted for the wire mesh. A slotted plate welded to the riser may be used in conjunction with the wire mesh if calculations are provided to show sufficient capacity of the inlet to accept the peak runoff for a 2-year storm event from the tributary drainage area. Top of pipe shall be at least 6 inches below adjacent roadway if ponded water would pose a safety hazard to traffic. Earthen berm shall be rolled.

Sediment shall be removed when it reaches half the height of the stone. Damaged or clogged installations shall be repaired or replaced immediately. For systems discharging to HQ or EV surface water, a 6 inch thick compost layer shall be securely anchored on outside and over top of stone. Compost shall meet the standards in Table 4.2.

STANDARD CONSTRUCTION DETAIL # 4-12
Wood Chip Filter Berm

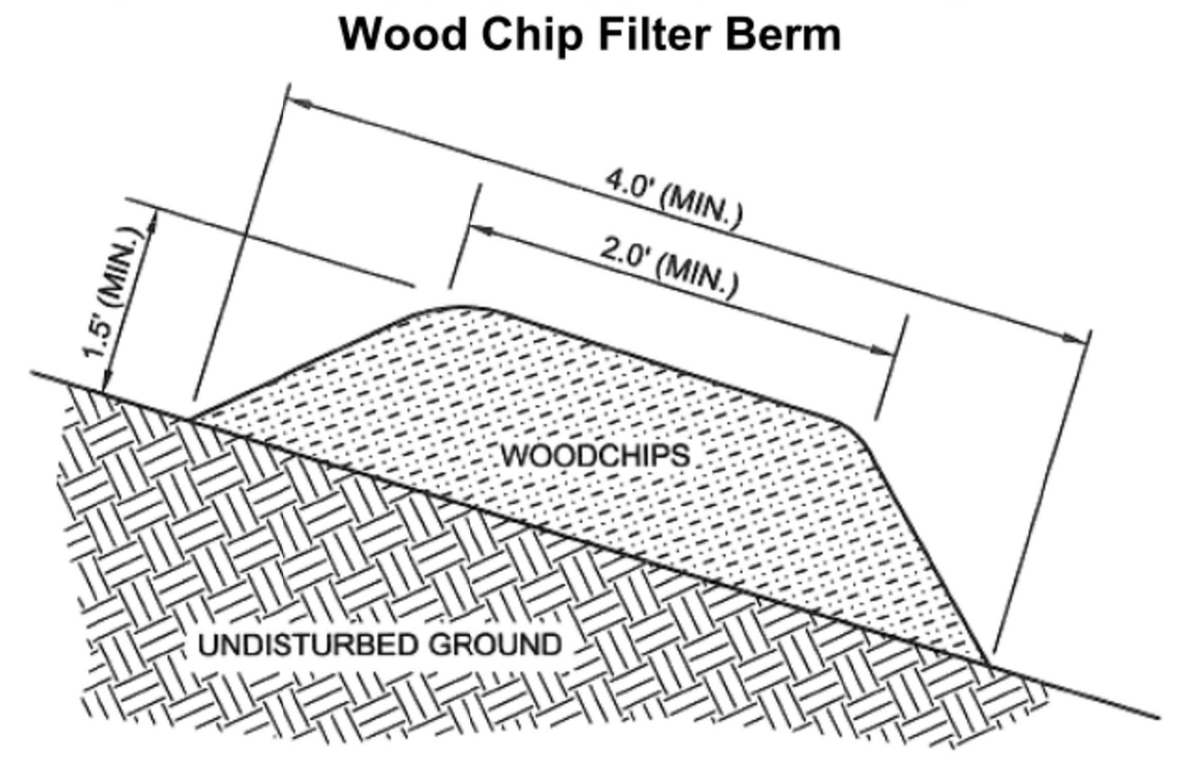

Adapted from Lebanon County Conservation district Conservation district

Prior to placement of the berm, obstructions such as tree limbs, large rocks, etc. shall be removed.

Wood chip filter berm shall be placed at existing level grade. Both ends of the berm shall be extended at least 8 feet up slope at 45 degrees to the main berm alignment (Figure 4.1). Wood chip berms shall not be located in areas of concentrated flow or used to construct sediment traps or other impoundments.

A 6" thick layer of compost shall be added to the upslope side of any wood chip filter berm located in an HQ watershed. This BMP shall not be routinely used in EV watersheds.

Berms shall be inspected weekly and after each runoff event. Sediment shall be removed when accumulations reach half the height of the berm. Damaged or deteriorated portions of the berm shall be replaced immediately upon inspection.

Berms may be leveled when the tributary area has been permanently stabilized or left in place.

STANDARD CONSTRUCTION DETAIL # 3-16
Pumped Water Filter Bag

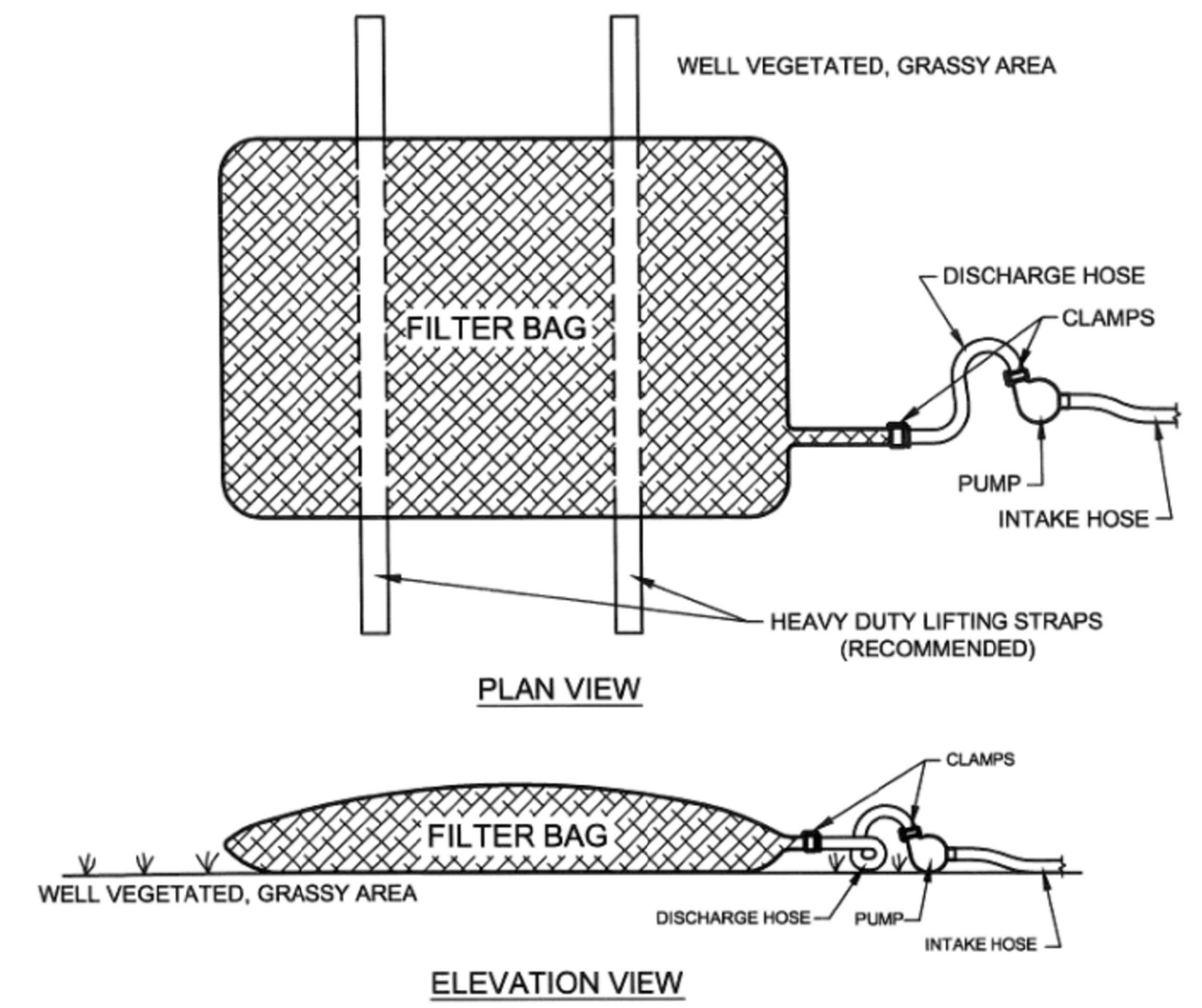

PA DEP

Low volume filter bags shall be made from non-woven geotextile material sewn with high strength, double stitched "J" type seams. They shall be capable of trapping particles larger than 150 microns. High volume filter bags shall be made from woven geotextiles that meet the following standards:

Property	Test Method	Minimum Standard
Avg. Wide Width Strength	ASTM D-4884	60 lb/in
Grab Tensile	ASTM D-4632	205 lb
Puncture	ASTM D-4833	110 lb
Mullen Burst	ASTM D-3786	350 psi
UV Resistance	ASTM D-4355	70%
AOS % Retained	ASTM D-4751	80 Sieve

A suitable means of accessing the bag with machinery required for disposal purposes shall be provided. Filter bags shall be replaced when they become ½ full of sediment. Spare bags shall be kept available for replacement of those that have failed or are filled. Bags shall be placed on straps to facilitate removal unless bags come with lifting straps already attached.

Bags shall be located in well-vegetated (grassy) area, and discharge onto stable, erosion resistant areas. Where this is not possible, a geotextile underlayment and flow path shall be provided. Bags may be placed on filter stone to increase discharge capacity. Bags shall not be placed on slopes greater than 5%. For slopes exceeding 5%, clean rock or other non-erodible and non-polluting material may be placed under the bag to reduce slope steepness.

No downslope sediment barrier is required for most installations. Compost berm or compost filter sock shall be installed below bags located in HQ or EV watersheds, within 50 feet of any receiving surface water or where grassy area is not available.

STANDARD CONSTRUCTION DETAIL #3-5
Waterbar

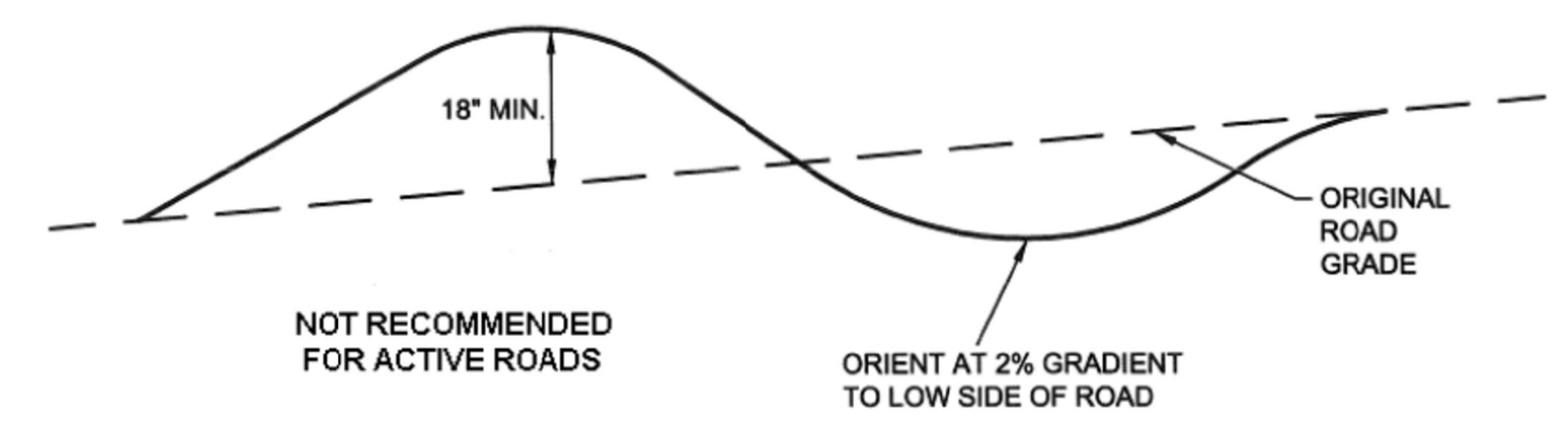

Adapted from USDA Forest Service

Waterbars shall discharge to a stable area.

Waterbars shall be inspected weekly (daily on active roads) and after each runoff event. Damaged or eroded waterbars shall be restored to original dimensions within 24 hours of inspection.

Maintenance of waterbars shall be provided until roadway, skidtrail, or right-of-way has achieved permanent stabilization.

Waterbars on retired roadways, skidtrails, and right-of-ways shall be left in place after permanent stabilization has been achieved.

TABLE 3.1 – Maximum Waterbar Spacing

PERCENT SLOPE	SPACING (FT)
<5	250
5 - 15	150
15 - 30	100
> 30	50

Adapted from USDA Forest Service

STANDARD CONSTRUCTION DETAIL # 6-1
Vegetated Channel

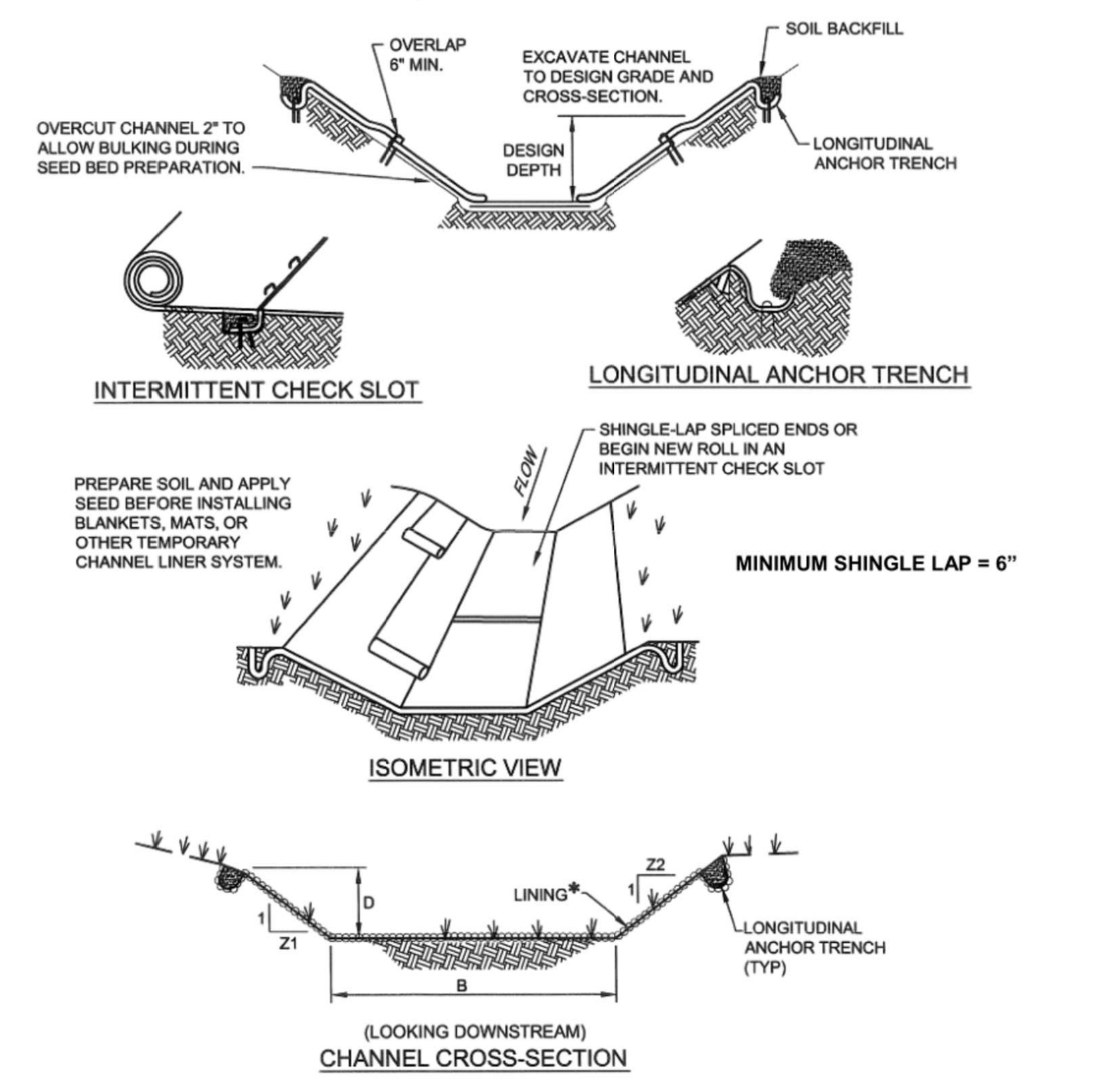

* SEE MANUFACTURER'S LINING INSTALLATION DETAIL FOR STAPLE PATTERNS, AND VEGETATIVE STABILIZATION SPECIFICATIONS FOR SOIL AMENDMENTS, SEED MIXTURES AND MULCHING INFORMATION.

Adapted from Salix Applied Earthcare - Erosion Draw 5.0

CHANNEL NO.	STATIONS	BOTTOM WIDTH B (FT)	DEPTH D (FT)	TOP WIDTH W (FT)	Z1	Z2	LINING
1	ALL	3	2	27	6	6	NAG S75
2	ALL	0	1.5	9	3	3	NAG S150
3	ALL	3	1.75	13.5	3	3	NAG S75
4	ALL	2	1.75	12.5	3	3	NAG S75
5	ALL	2	1.75	12.5	3	3	NAG S75
6	ALL	2	1.75	12.5	3	3	NAG S75
7	ALL	2	1.5	11	3	3	NAG S75
8	ALL	2	1.75	12.5	3	3	NAG S75

Anchor trenches shall be installed at beginning and end of channel in the same manner as longitudinal anchor trenches.

Channel dimensions shall be constantly maintained. Channel shall be cleaned whenever total channel depth is reduced by 25% at any location. Sediment deposits shall be removed within 24 hours of discovery or as soon as soil conditions permit access to channel without further damage. Damaged lining shall be repaired or replaced within 48 hours of discovery.

STANDARD CONSTRUCTION DETAIL # 4-6
Rock Filter Outlet

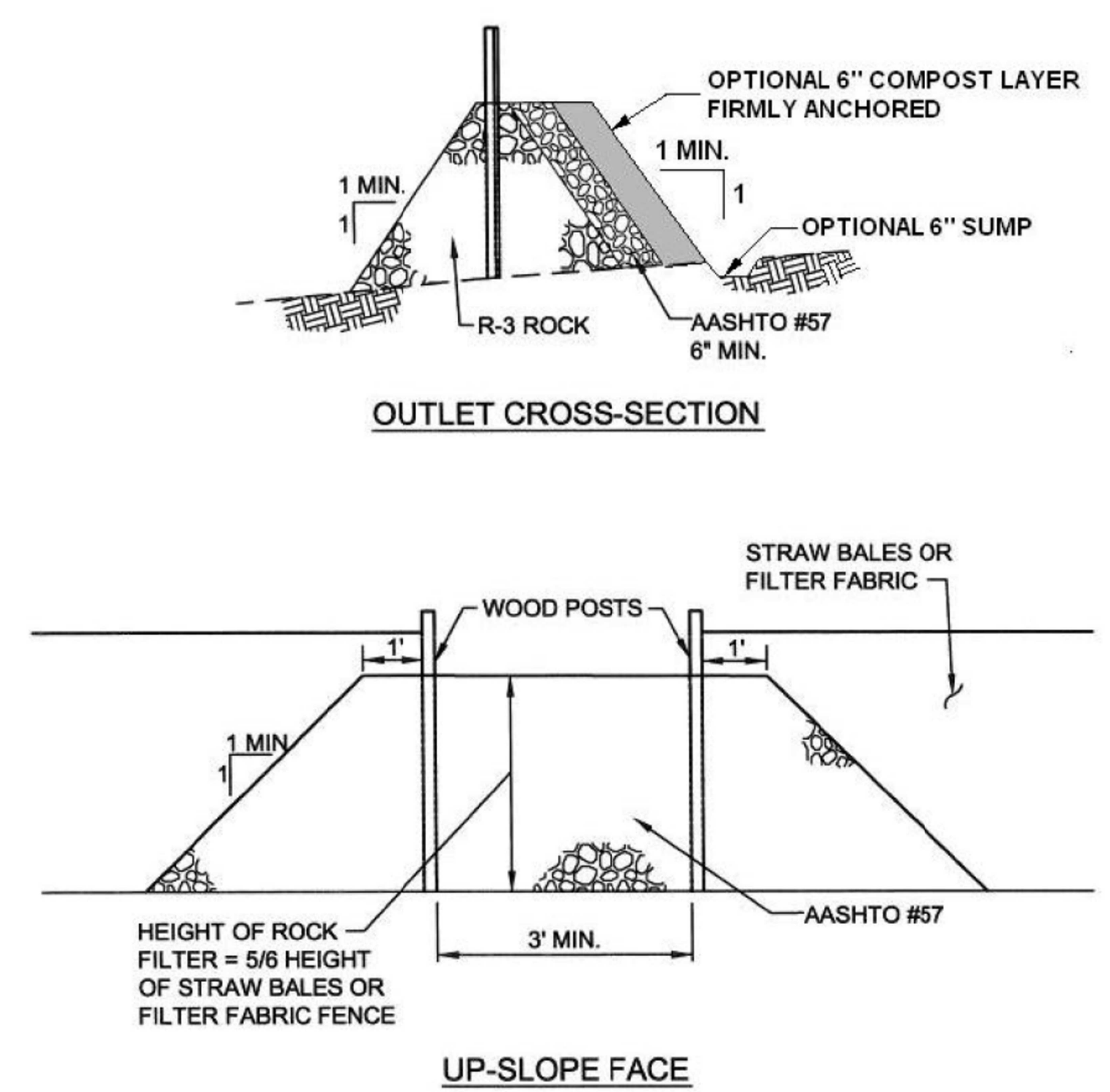

PA DEP

A rock filter outlet shall be installed where failure of a silt fence or straw bale barrier has occurred due to concentrated flow. Anchored compost layer shall be used on upslope face in HQ and EV watersheds.

Sediment shall be removed when accumulations reach 1/3 the height of the outlet.

Example Alternative Rock Construction Entrance

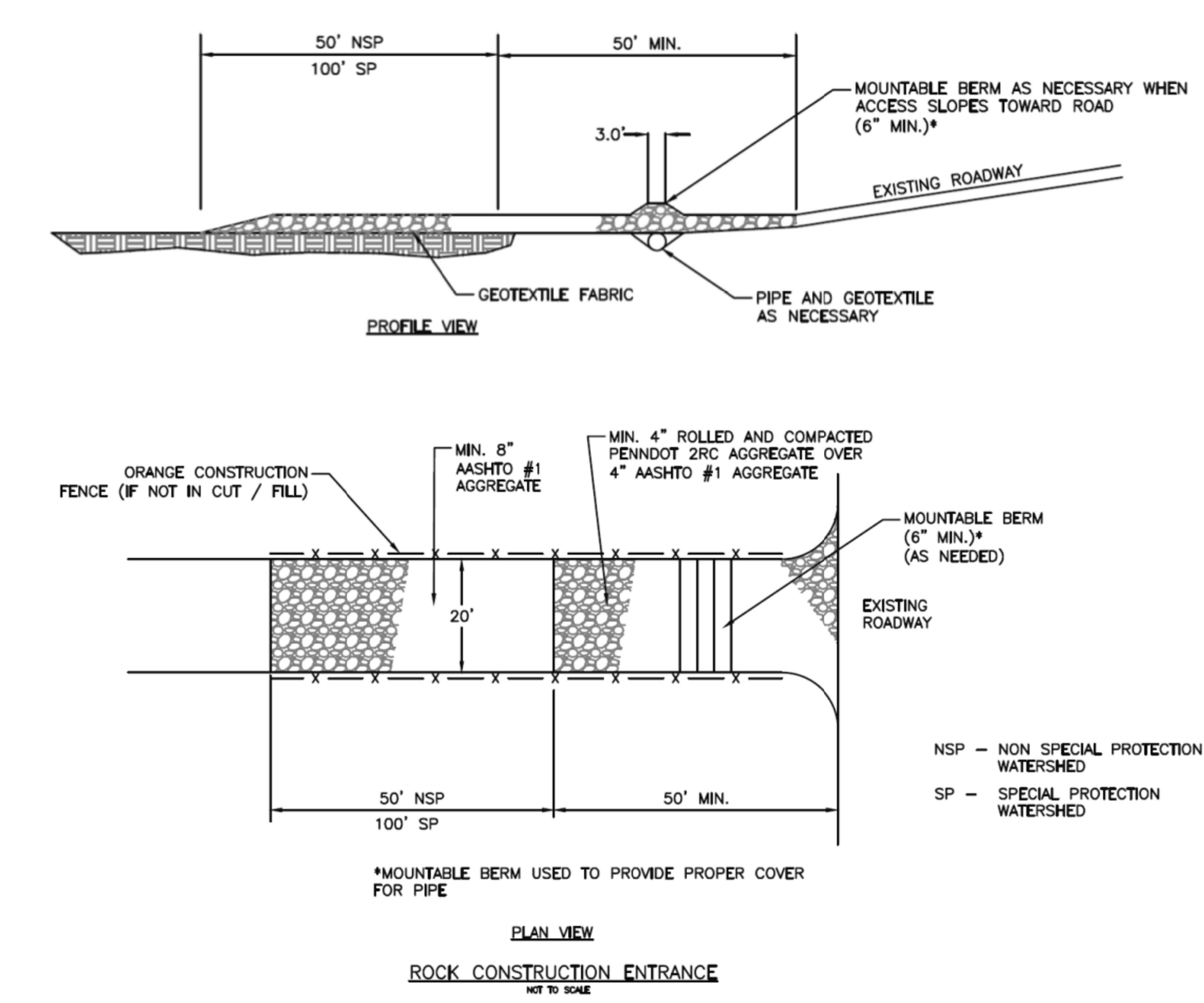

* MOUNTABLE BERM USED TO PROVIDE PROPER COVER FOR PIPE

NOTES:

REMOVE TOPSOIL PRIOR TO INSTALLATION OF ROCK CONSTRUCTION ENTRANCE. EXTEND ROCK OVER FULL WIDTH OF ENTRANCE.

RUNOFF SHALL BE DIVERTED FROM ROADWAY TO A SUITABLE SEDIMENT REMOVAL BMP PRIOR TO ENTERING ROCK CONSTRUCTION ENTRANCE.

MOUNTABLE BERM SHALL BE INSTALLED WHEREVER OPTIONAL CULVERT PIPE IS USED AND PROPER PIPE COVER AS SPECIFIED BY MANUFACTURER IS NOT OTHERWISE PROVIDED. PIPE SHALL BE SIZED APPROPRIATELY FOR SIZE OF DITCH BEING CROSSED.

MAINTENANCE: ROCK CONSTRUCTION ENTRANCE THICKNESS SHALL BE CONSTANTLY MAINTAINED TO THE SPECIFIED DIMENSIONS BY ADDING ROCK. A STOCKPILE SHALL BE MAINTAINED ON SITE FOR THIS PURPOSE. ALL SEDIMENT DEPOSITED ON PAVED ROADWAYS SHALL BE REMOVED AND RETURNED TO THE CONSTRUCTION SITE IMMEDIATELY. IF EXCESSIVE AMOUNTS OF SEDIMENT ARE BEING DEPOSITED ON ROADWAY, EXTEND LENGTH OF ROCK CONSTRUCTION ENTRANCE BY 50 FOOT INCREMENTS UNTIL CONDITION IS ALLEVIATED OR INSTALL WASH RACK. WASHING THE ROADWAY OR SWEEPING THE DEPOSITS INTO ROADWAY DITCHES, SEWERS, CULVERTS, OR OTHER DRAINAGE COURSES IS NOT ACCEPTABLE.

STANDARD CONSTRUCTION DETAIL #3-1
ROCK CONSTRUCTION ENTRANCE

NOT TO SCALE

STANDARD CONSTRUCTION DETAIL # 9-1
Riprap Apron at Pipe Outlet with Flared End Section or Endwall

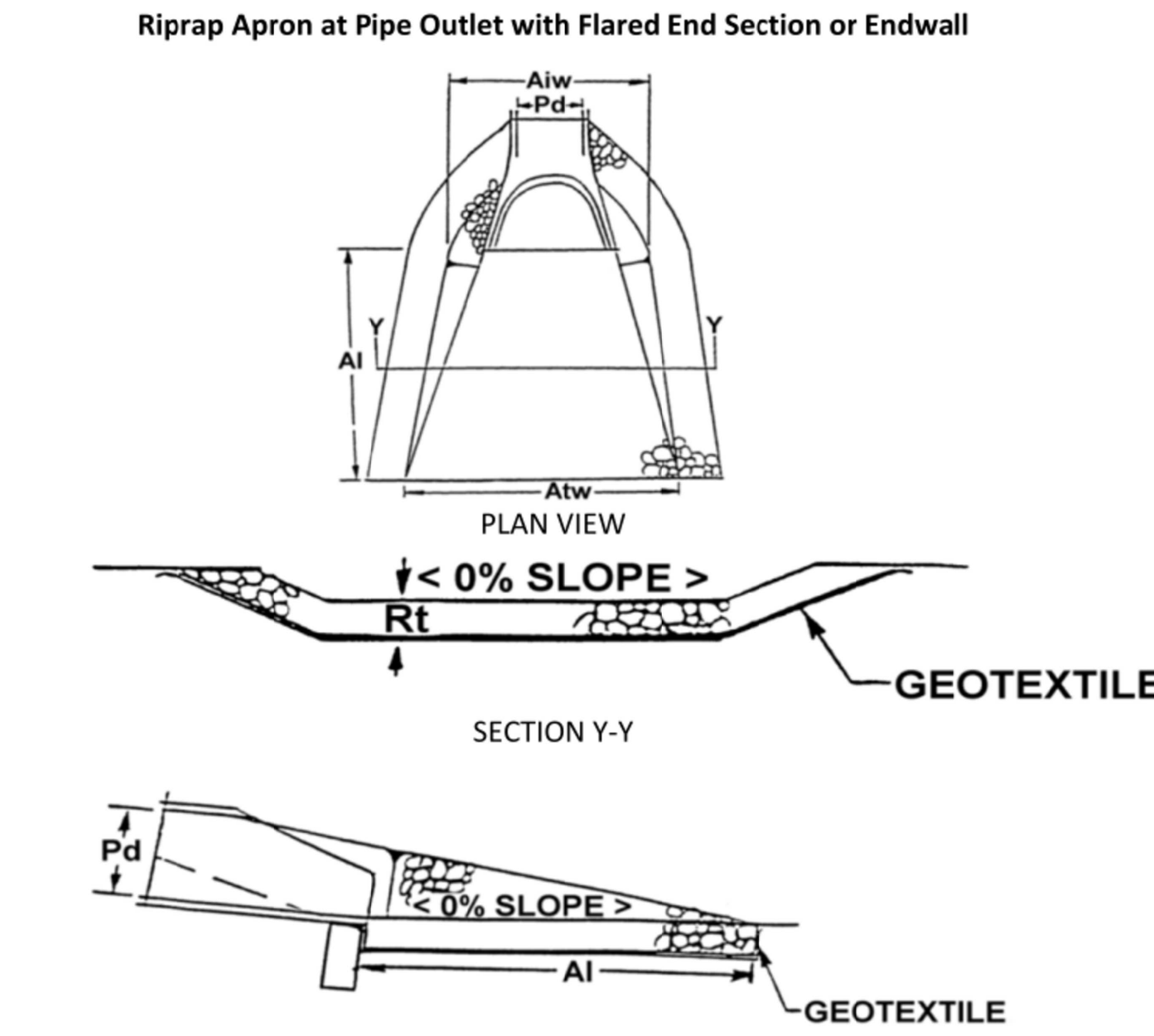

PA DEP ELEVATION VIEW

Note: This table is intentionally blank and should be filed in by the plan preparer.

Outlet No.	Pipe DIA Pd (in)	RIPRAP		APRON		
		Size (R-__)	Thick. Rt (in)	Length Al (ft)	Initial Width Aiw (ft)	Terminal Width Atw (ft)
A	18	R-3	6.5	8	4.5	7.70
B	15	R-3	6.5	6	3.75	6.15
C	15	R-3	6.5	6	3.75	6.15
D	36	R-5	11.5	28	9	29.00
F	48	R-6	13	28	12	40.00
G	18	R-3	6.5	8	4.5	12.50
H	18	R-4	9	8	4.5	12.50
I	12	R-3	6.5	10	3	13.00
J	12	R-4	9	6	3	9.00
K	15	R-4	9	16	3.75	19.75

All aprons shall be constructed to the dimension shown. Terminal widths shall be adjusted as necessary to match receiving channels.

All aprons shall be inspected at least weekly and after each runoff event. Displaced riprap within the apron shall be replaced immendiately.

architecture
engineering
landscape architecture
planning
surveying

melham
ASSOCIATES, PC

2247 North Front Street
Harrisburg, PA 17110

tel 717 238 5000

fax 717 236 2600

www.melham.com

[redacted]

CLIENT

Estate of
Martha Joan Banzhoff
c/o Harry G. Banzhoff,
Executor

2308 STUMPSTOWN ROAD
MECHANICSBURG, PA 17055
(717) 691-5572

PROJECT

Banzhoff Tract

UPPER ALLEN TOWNSHIP, CUMBERLAND COUNTY, PA

PHASE

PRELIMINARY

DRAWING

EROSION AND SEDIMENTATION CONTROL DETAILS

© 2021 MELHAM ASSOCIATES PC

SCALE

1" = 50'

[redacted]

JOB #

7680

CADD

7680C-4.dwg

DATE

7/27/21

SHEET

C-4.4

Jul 27, 2021 Z:\Prj-7000\7680\Banzhoff\Pre\dwg\7680C-4.dwg

Wherever total trap dewatering is required, one 1" diameter hole should be located at the bottom of the riser and a 2' thick layer of AASHTO #57 stone placed around the riser up to the top of the sediment storage zone. Filter cloth wrapped around the riser is not an acceptable alternative due to the potential for clogging. **A dry sediment trap riser has low sediment removal efficiency. It is not an ABACT for special protection watersheds. However, the efficiency can be raised to MODERATE by anchoring a 6" layer of compost around the outside of the AASHTO #57 stone.**

STANDARD CONSTRUCTION DETAIL #8-5
Dry Sediment Trap Temporary Riser

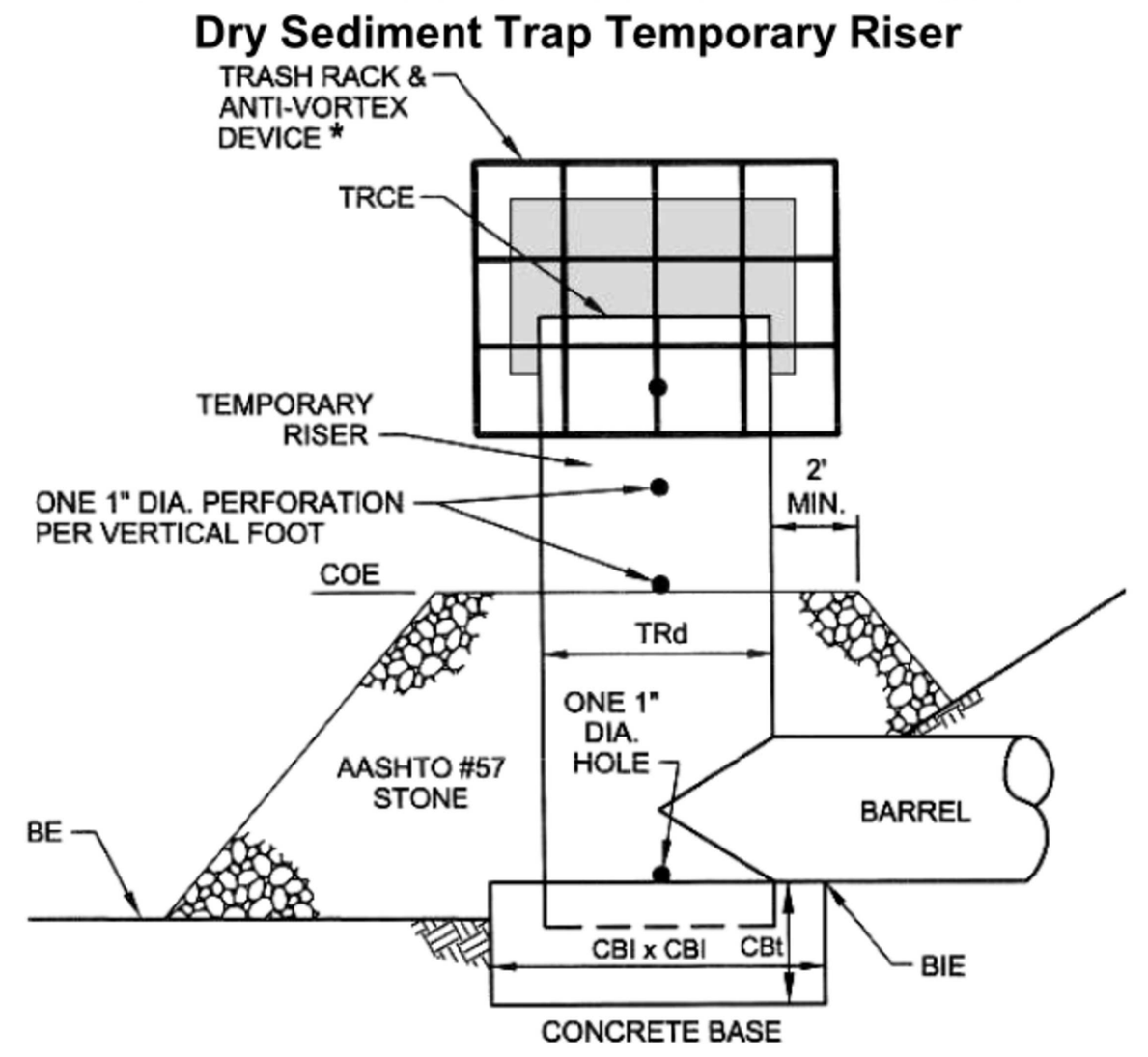

*** See Standard Construction Detail #7-5, Trash Rack and Anti-vortex Device.**

Clogged or damaged spillways shall be repaired immediately. Trash and other debris from the trap and riser shall be removed.

In special protection watersheds, anchor a 6" layer of compost shall be securely anchored on top of stone (HQ) or replace stone with suitable compost filter sock (HQ or EV).

Place a minimum of 2 #8 rebar at right angles and projecting through sides of riser to anchor it to concrete base. Rebar shall project a minimum of ¼ riser diameter beyond outside of riser.

Concrete base shall be poured in such a manner as to insure that concrete fills bottom of riser to invert of the outlet pipe to prevent riser from breaking away from the base. Minimum base width equals 2 times riser diameter.

STANDARD CONSTRUCTION DETAIL # 8-4
Dry Barrel/Riser Sediment Trap

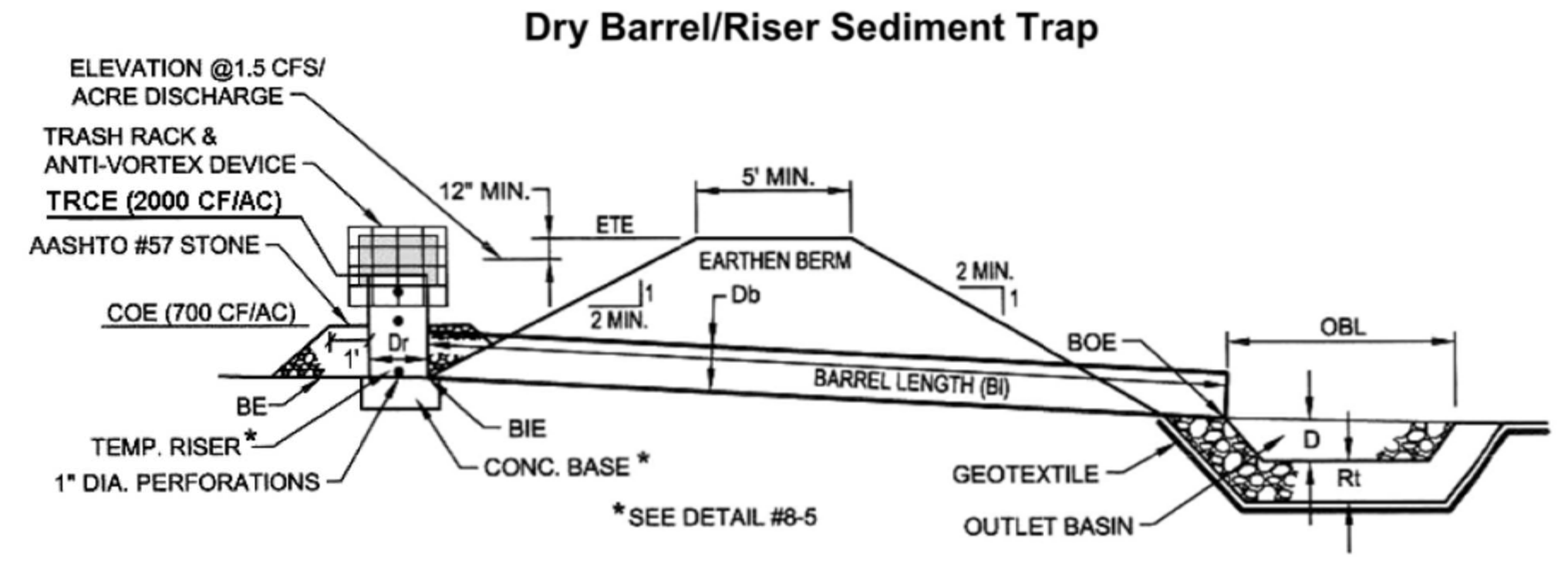

In special protection — HQ or EV — watersheds, add 6" layer of compost on top of stone or replace stone with suitable compost filter sock.

Fill material for the embankments shall be free of roots, or other woody vegetation, organic material, large stones, and other objectionable materials. The embankment shall be compacted in layered lifts of not more than 6" to 9". The maximum rock size shall be no greater than 2/3 the lift thickness.

Upon completion, the embankment shall be seeded, mulched, and blanketed or otherwise stabilized according to the specifications of the E&S plan drawings.

All sediment traps shall be inspected at least weekly and after each runoff event.

Access for sediment removal and other required maintenance activities shall be provided.
I

A clean out stake shall be placed near the center of each trap. Accumulated sediment shall be removed when it has reached the clean out elevation on the stake and the trap restored to its original dimensions. Dispose of materials removed from the trap in the manner described in the E&S plan.

Check embankments, spillways, and outlets for erosion, piping and settlement. Clogged or damaged spillways and/or embankments shall be immediately restored to the design specifications.

Displaced riprap within the outlet protection shall be replaced immediately.

STANDARD CONSTRUCTION DETAIL #4-1
COMPOST FILTER SOCK

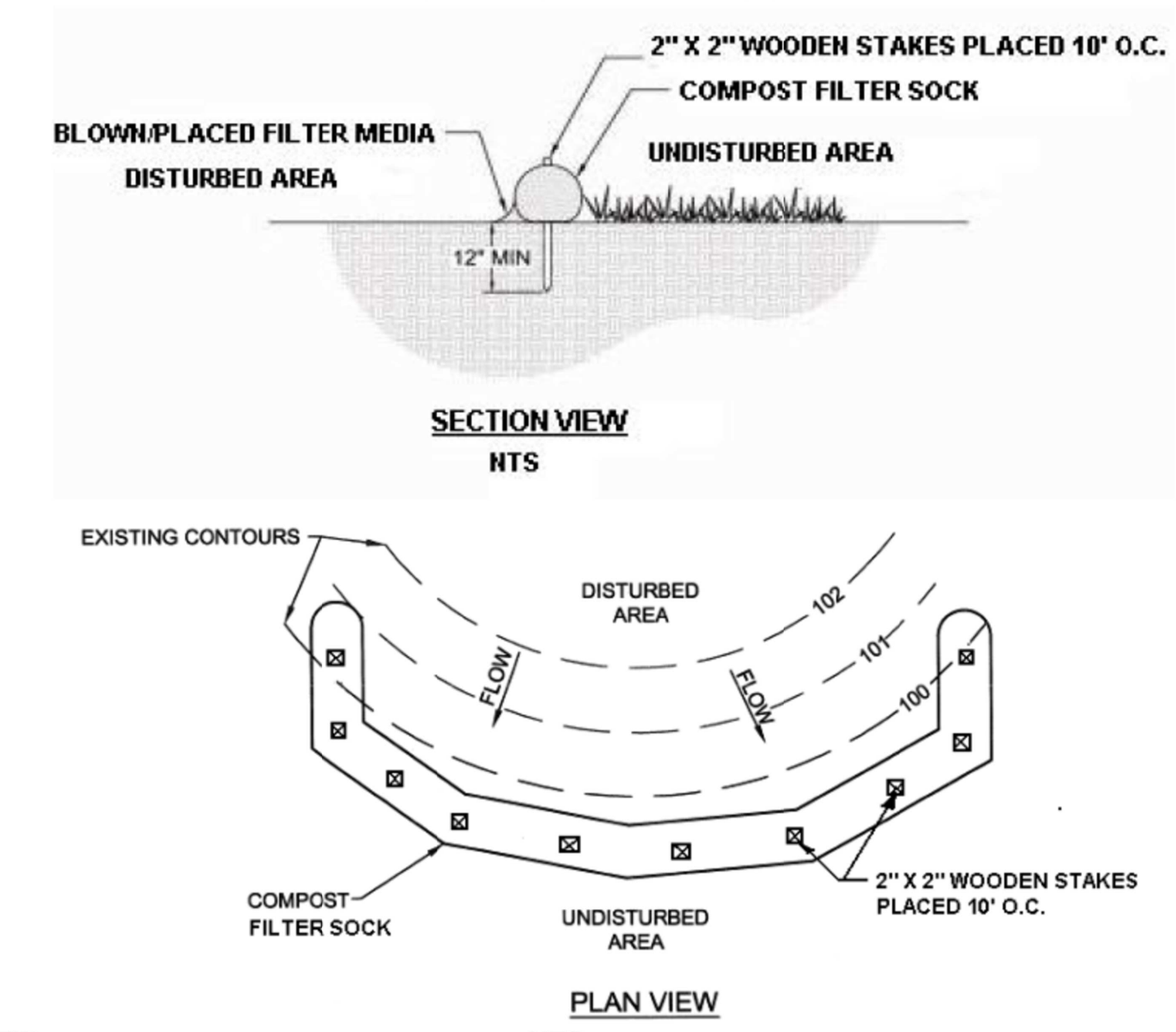

Filtrexx **NTS**

Sock fabric shall meet standards of Table 4.1. Compost shall meet the standards of Table 4.2.

Compost filter sock shall be placed at existing level grade. Both ends of the sock shall be extended at least 8 feet up slope at 45 degrees to the main sock alignment (Figure 4.1). Maximum slope length above any sock shall not exceed that shown on Figure 4.2. Stakes may be installed immediately downslope of the sock if so specified by the manufacturer.

Traffic shall not be permitted to cross filter socks.

Accumulated sediment shall be removed when it reaches half the aboveground height of the sock and disposed in the manner described elsewhere in the plan.

Socks shall be inspected weekly and after each runoff event. Damaged socks shall be repaired according to manufacturer's specifications or replaced within 24 hours of inspection.

Biodegradable filter socks shall be replaced after 6 months; photodegradable socks after 1 year. Polypropylene socks shall be replaced according to manufacturer's recommendations.

Upon stabilization of the area tributary to the sock, stakes shall be removed. The sock may be left in place and vegetated or removed. In the latter case, the mesh shall be cut open and the mulch spread as a soil supplement.

STANDARD CONSTRUCTION DETAIL #4-2
Compost Filter Berm

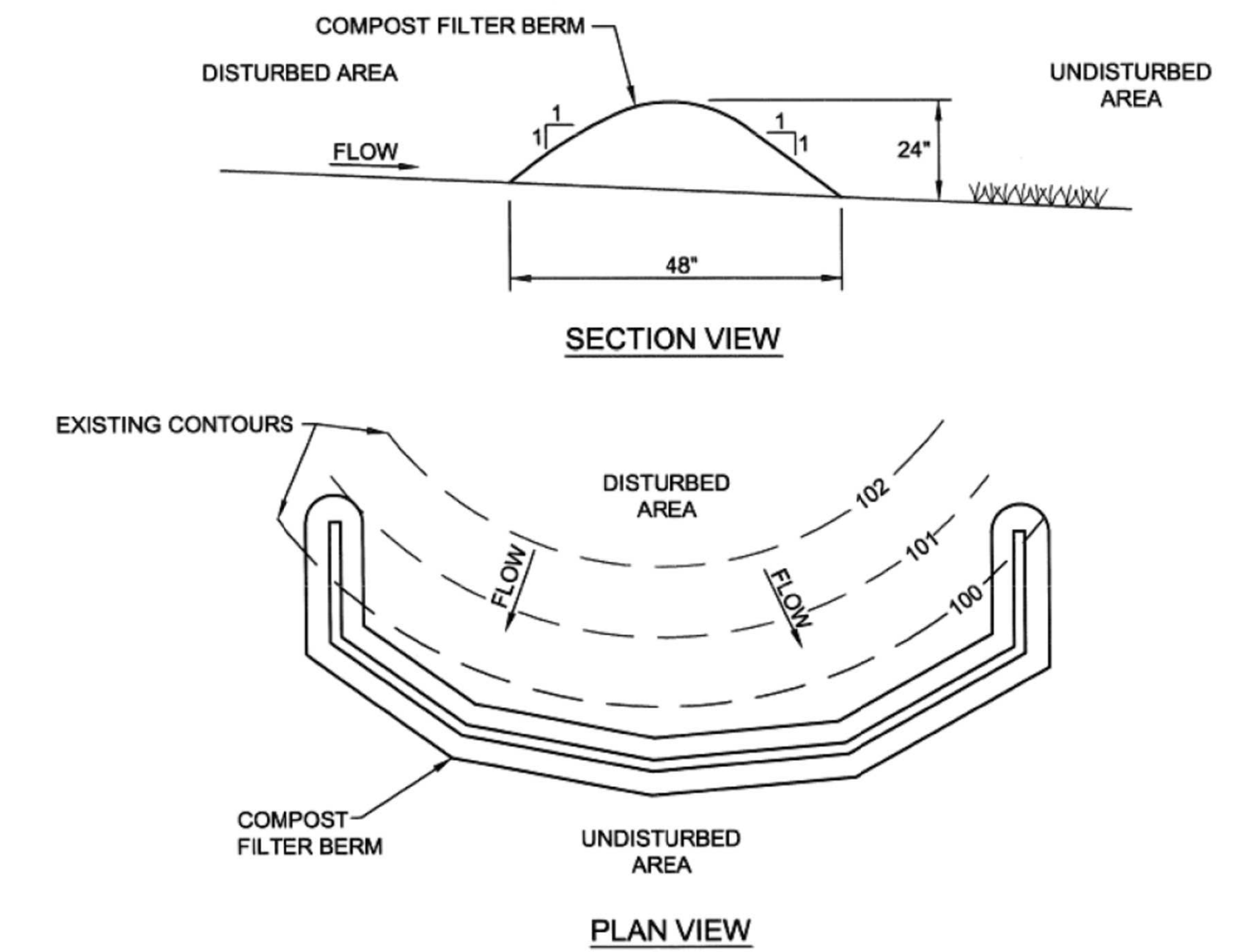

Adapted from PennDOT

Compost shall meet the standards in Table 4.2.

Compost filter berms shall be placed at existing level grade. Both ends of the berm shall be extended at least 8 feet up slope at 45 degrees to the main berm alignment (see Figure 4.1).

The maximum slope length above a compost filter berm shall not exceed that shown in Table 4.4 for the standard silt fence (18" high fence).

Tall grass shall be cut prior to installation to minimize potential for undercutting. Berm shall be netted or otherwise anchored after installation.

Sediment shall be removed when accumulations reach 1/3 the aboveground height of the berm.

Any section compost filter berm which has been undermined or topped shall be immediately replaced. Concentrated flows shall not be directed toward any compost filter berm.

The physical parameters of the compost should comply with the standards in Table 4.2. The standards contained in the PennDOT Publication 408 are an acceptable alternative.

TABLE 4.2
Compost Standards

Organic Matter Content	80% - 100% (dry weight basis)
Organic Portion	Fibrous and elongated
pH	5.5 - 8.0
Moisture Content	35% - 55%
Particle Size	98% pass through 1" screen
Soluble Salt Concentration	5.0 dS/m (mmhos/cm) Maximum

Filtrexx

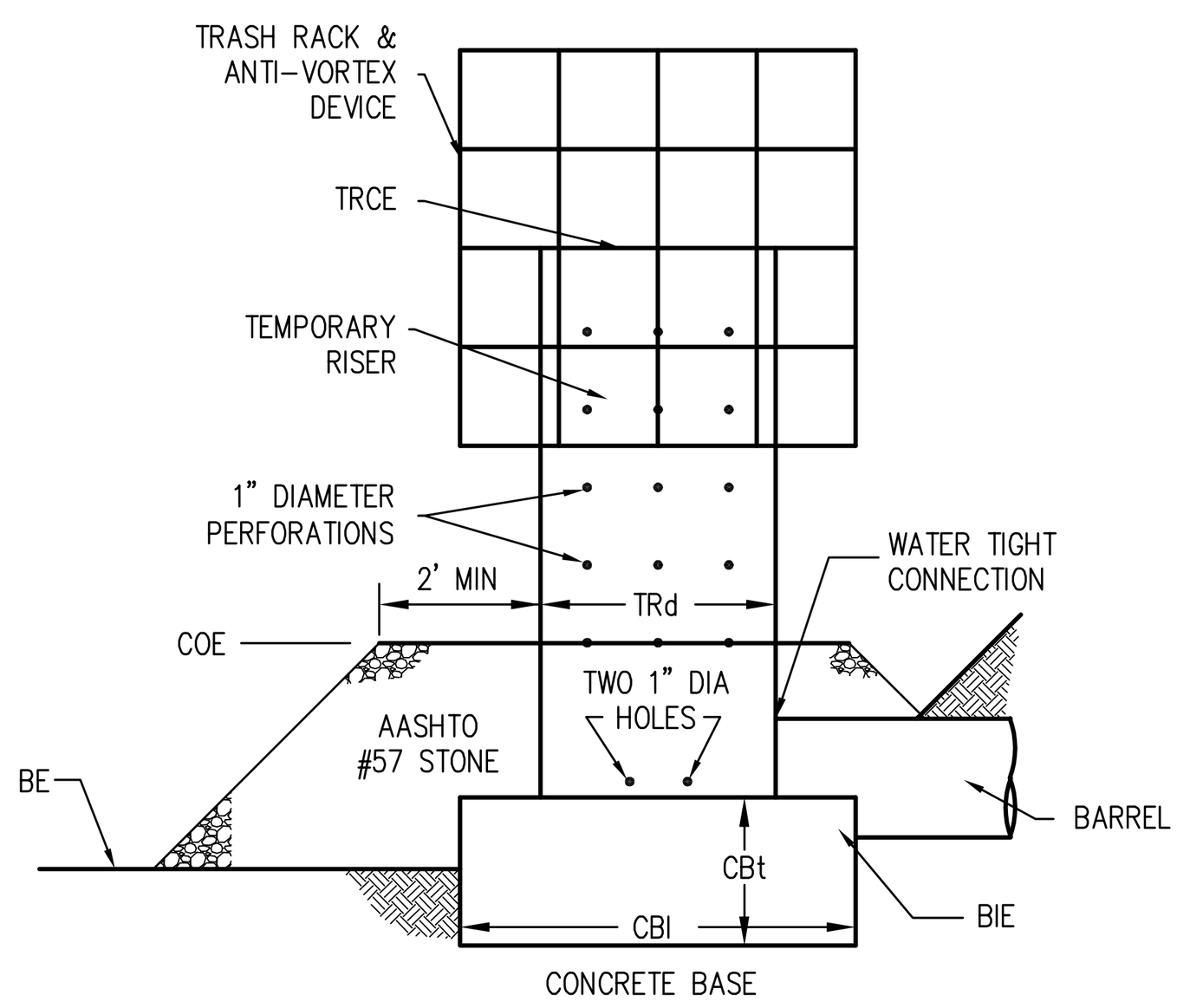

* SEE TRASH RACK & ANTI-VORTEX DEVICE DETAIL

DRY SEDIMENT BASIN
TEMPORARY RISER*
NO SCALE

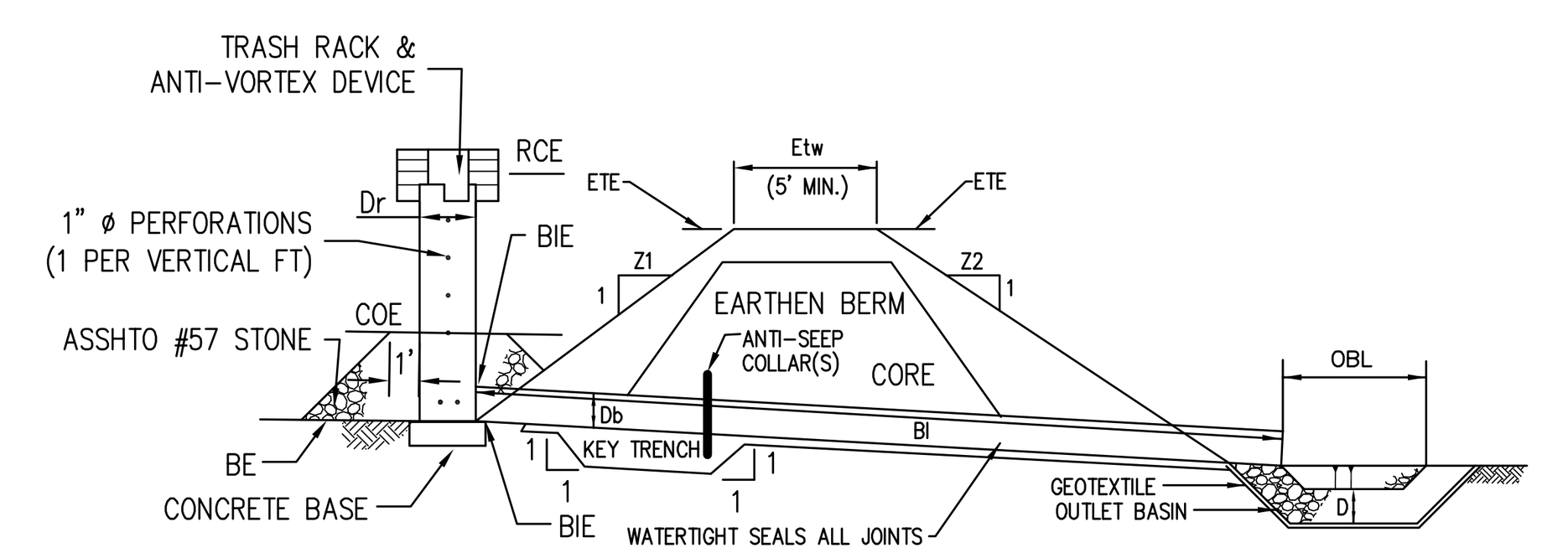

DRY BARREL/ RISER
SEDIMENT TRAPS
NO SCALE

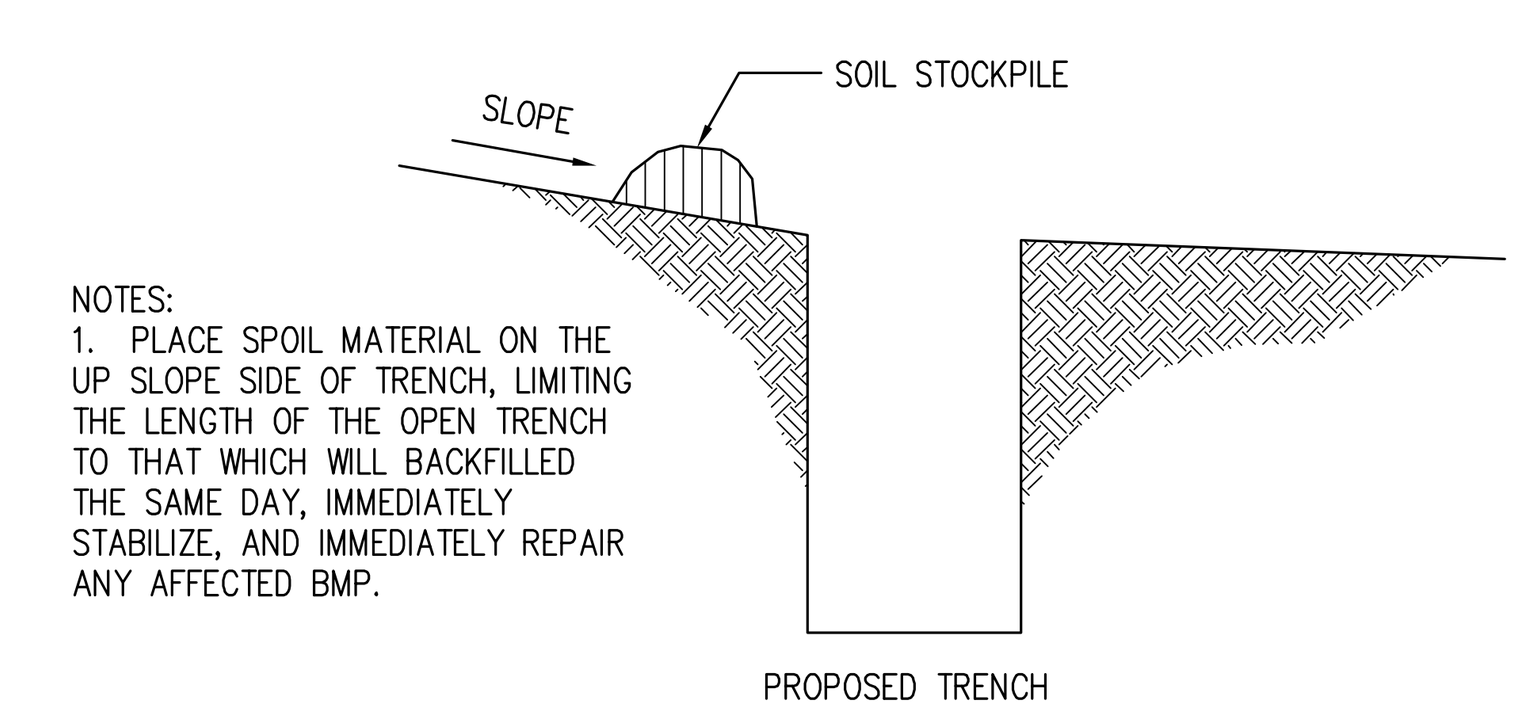

PIPELINE TRENCHING DETAIL
NO SCALE

FIGURE 3.18
Typical Compost Sock Washout Installation

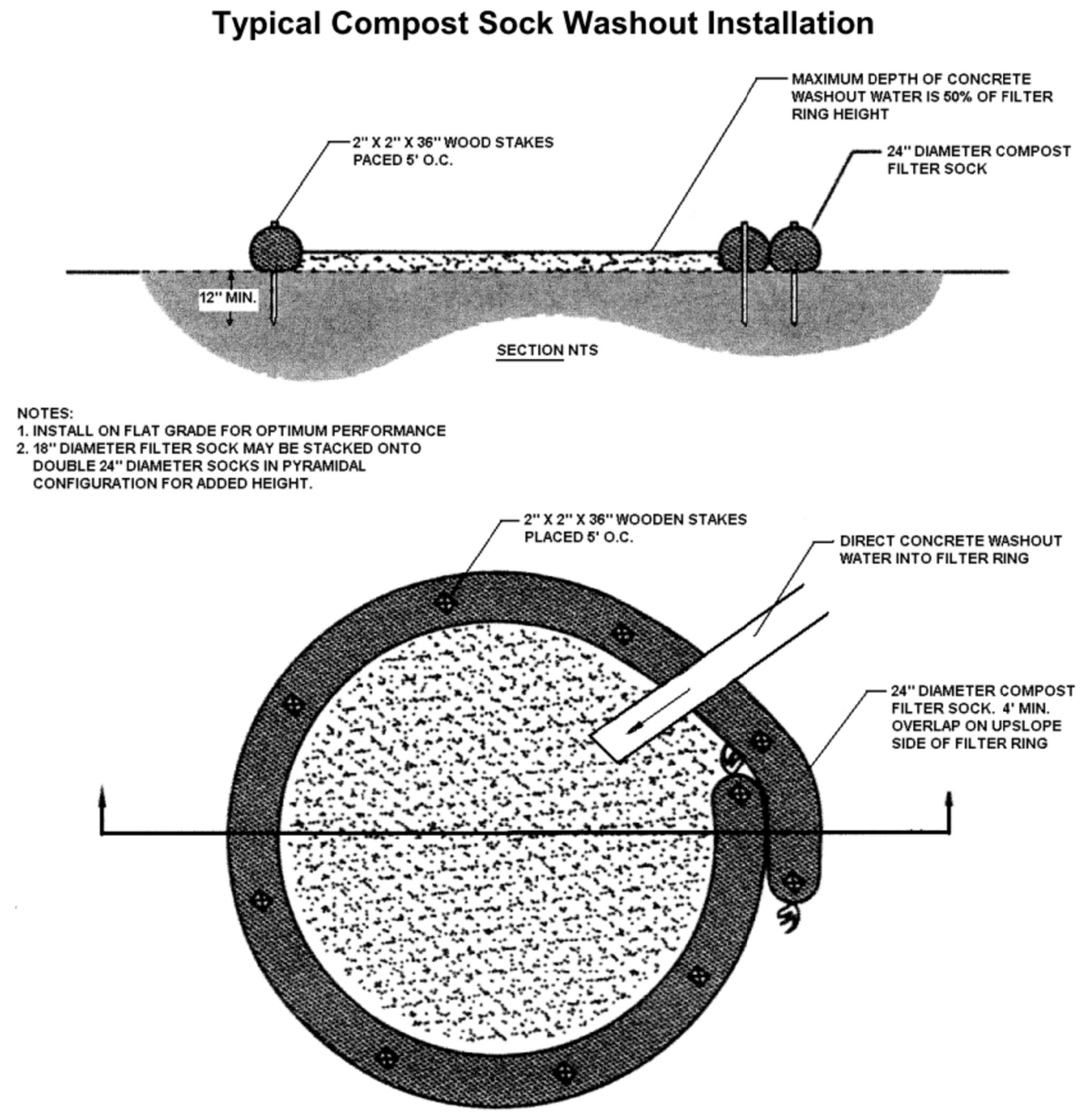

A suitable impervious geomembrane shall be placed at the location of the washout prior to installing the socks.
Adapted from Filtrexx

Map Unit Legend

Cumberland County, Pennsylvania (PA041)			
Map Unit Symbol	Map Unit Name	Acres in AOI	Percent of AOI
BdB	Bedington shaly silt loam, 3 to 8 percent slopes	8.7	15.2%
BdC	Bedington shaly silt loam, 8 to 15 percent slopes	20.8	36.5%
BdD	Bedington shaly silt loam, 15 to 25 percent slopes	4.5	8.0%
HdF	Hagerstown-Rock outcrop complex, 25 to 60 percent slopes	0.2	0.3%
Me	Melvin silt loam	9.2	16.1%
MnB	Monongahela silt loam, 3 to 8 percent slopes	5.3	9.3%
MuB	Murrill channery loam, 3 to 8 percent slopes	3.8	6.7%
MuC	Murrill channery loam, 8 to 15 percent slopes	3.5	6.1%
W	Water	0.2	0.4%
Wa	Warners silt loam	0.9	1.5%
Totals for Area of Interest		**56.9**	**100.0%**

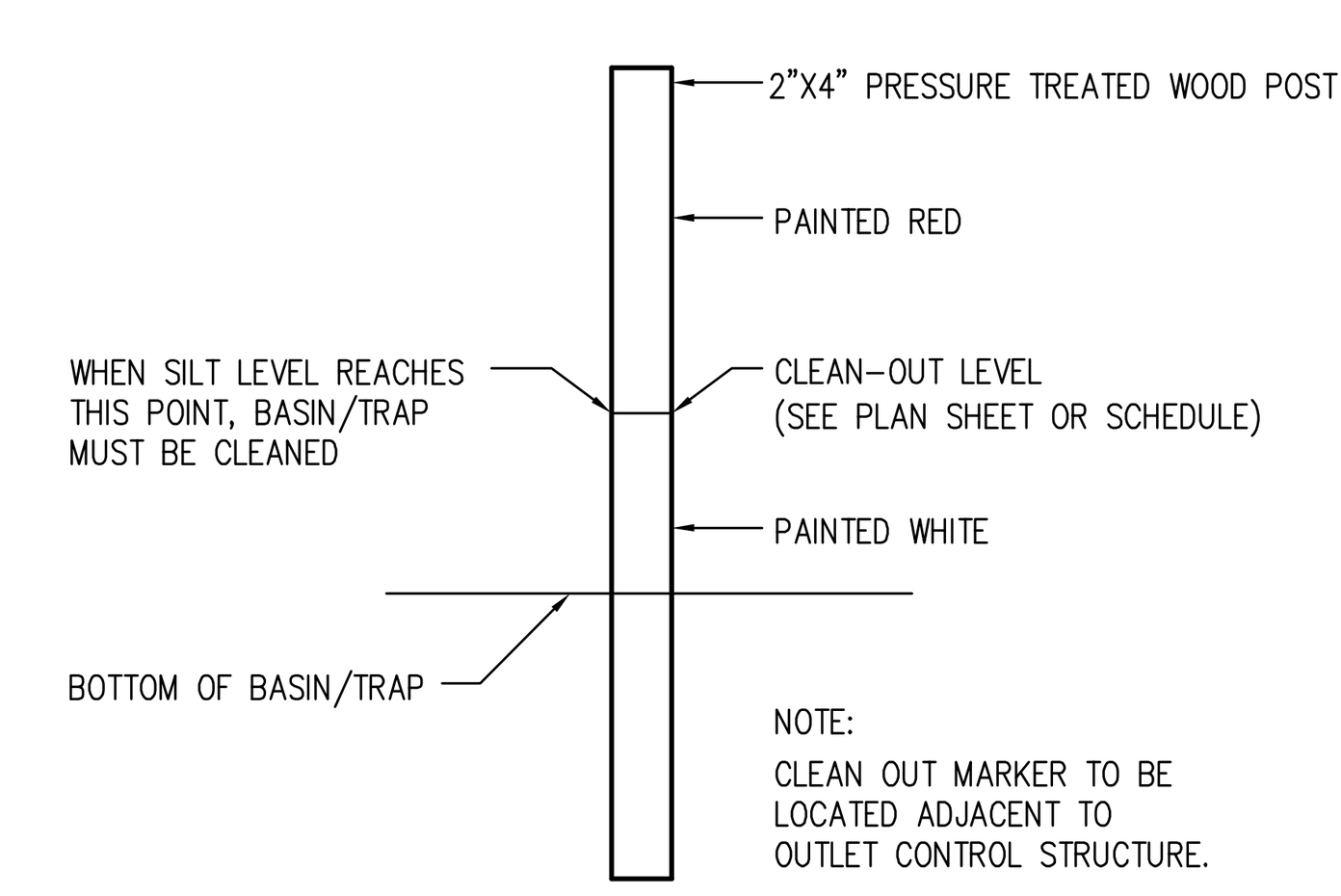

SEDIMENT CLEANOUT MARKER
NO SCALE

STANDARD E&S WORKSHEET #1
Compost Filter Socks

PROJECT NAME: Banzhoff Tract
LOCATION: Upper Allen Township, Cumberland County
PREPARED BY: GDK DATE: 2/11/2021
CHECKED BY: ECD DATE: 2/11/2021

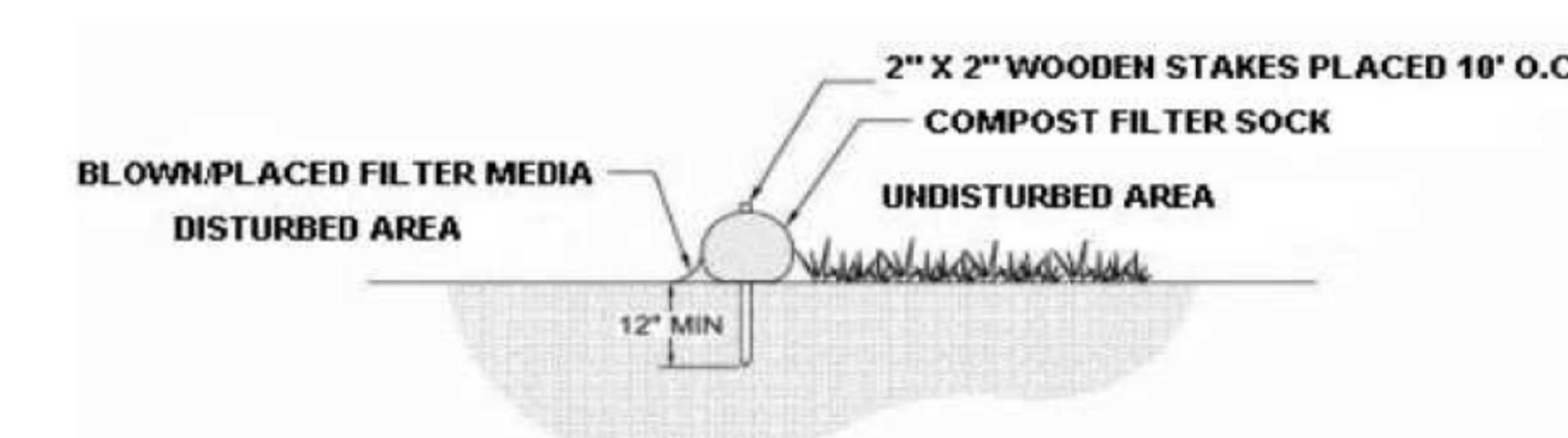

SOCK NO.	DIA (IN)	LOCATION	SLOPE PERCENT	SLOPE LENGTH ABOVE BARRIER (FT)
1	18"	West of Entrance Road	33.00%	30'
2	12"	Top Soil Stockpile @ Entrance Road	33.00%	20'
3	32"	East Perimeter	7.00%	500'
4	18"	East Perimeter	40.00%	30'
5	12"	Topsoil Stockpile @ Entrance Road & East Loop Road	33.00%	20'
6	12"	Berm Perimeter	20.00%	30'
7	32"	South Perimeter	18.00%	300'
8	32"	South Perimeter	15.00%	240'
9	18"	South Perimeter	16.00%	120'
10	12"	Rain Garden Perimeter	20.00%	20'

STANDARD WORKSHEET #1 Compost Filter Sock.xls

architecture
engineering
landscape architecture
planning
surveying

melham ASSOCIATES, PC

2247 North Front Street
Harrisburg, PA 17110

tel 717 238 5000

fax 717 236 2600
www.melham.com

CLIENT

Estate of
Martha Joan Banzhoff
c/o Harry G. Banzhoff,
Executor

2308 STUMPSTOWN ROAD
MECHANICSBURG, PA 17055
(717) 691-5572

PROJECT

Banzhoff Tract

UPPER ALLEN TOWNSHIP, CUMBERLAND COUNTY, PA

PHASE

PRELIMINARY

DRAWING

EROSION AND SEDIMENTATION CONTROL DETAILS

© 2021 MELHAM ASSOCIATES PC

SCALE

1" = 50'

JOB #

7680

CADD

7680C-4.dwg

DATE

7/27/21

SHEET

C-4.5

Jul 27, 2021 Z:\Prj-7000\7680\Banzhoff\Pre\dwg\7680C-4.dwg

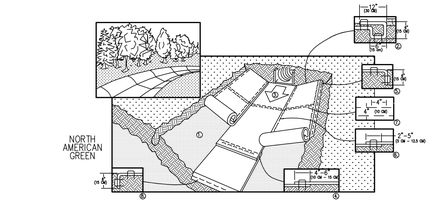

1. PREPARE SOIL BEFORE INSTALLING BLANKETS, INCLUDING ANY NECESSARY APPLICATION OF LIME, FERTILIZER, AND SEED. NOTE: WHEN USING CELL-O-SEED DO NOT SEED PREPARED AREA. CELL-O-SEED MUST BE INSTALLED WITH PAPER SIDE DOWN.
2. BEGIN AT THE TOP OF THE CHANNEL BY ANCHORING THE BLANKET IN A 6" (15 CM) DEEP X 6" (15 CM) WIDE TRENCH WITH APPROXIMATELY 12" (30 CM) OF BLANKET EXTENDED BEYOND THE UP-SLOPE PORTION OF THE TRENCH. ANCHOR THE BLANKET WITH A ROW OF STAPLES/STAKES APPROXIMATELY 12" (30 CM) APART IN THE BOTTOM OF THE TRENCH. BACKFILL AND COMPACT THE TRENCH AFTER STAPLING. APPLY SEED TO COMPACTED SOIL AND FOLD REMAINING 12" (30 CM) PORTION OF BLANKET BACK OVER SEED AND COMPACTED SOIL. SECURE BLANKET OVER COMPACTED SOIL WITH A ROW OF STAPLES/STAKES SPACED APPROXIMATELY 12" (30 CM) ACROSS THE WIDTH OF THE BLANKET.
3. ROLL CENTER BLANKET IN DIRECTION OF WATER FLOW IN BOTTOM OF CHANNEL. BLANKETS WILL UNROLL WITH APPROPRIATE SIDE AGAINST THE SOIL SURFACE. ALL BLANKETS MUST BE SECURELY FASTENED TO SOIL SURFACE BY PLACING STAPLES/STAKES IN APPROPRIATE LOCATIONS AS SHOWN IN THE STAPLE PATTERN GUIDE. WHEN USING THE DOT SYSTEM , STAPLES/STAKES SHOULD BE PLACED THROUGH EACH OF THE COLORED DOTS CORRESPONDING TO THE APPROPRIATE STAPLE PATTERN.
4. THE EDGES OF PARALLEL BLANKETS MUST BE STAPLED WITH APPROXIMATELY 2" – 5" (5 CM – 12.5 CM) OVERLAP DEPENDING ON BLANKET TYPE.
5. CONSECUTIVE BLANKETS SPLICED DOWN THE SLOPE MUST BE PLACED END OVER END (SHINGLE STYLE) WITH AN APPROXIMATE 3" (7.5 CM) OVERLAP. STAPLE THROUGH OVERLAPPED AREA, APPROXIMATELY 12" (30 CM) APART ACROSS ENTIRE

*IN LOOSE SOIL CONDITIONS, THE USE OF STAPLE OR STAKE LENGTHS GREATER THAN 6" (15 CM) MAY BE NECESSARY TO

SLOPE INSTALLATION

NO SCALE

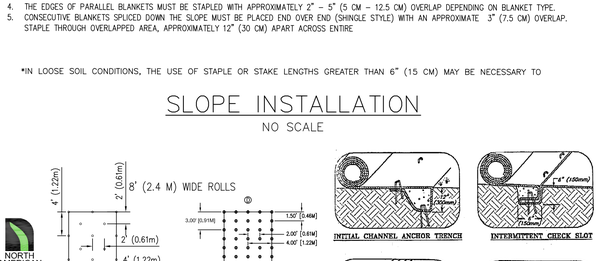

STAPLE PATTERN DETAIL

NO SCALE

INITIAL CHANNEL ANCHOR TRENCH

INTERMITTENT CHECK SLOT

LONGITUDINAL ANCHOR TRENCH

TERMINAL SLOPE AND CHANNEL ANCHOR TRENCH

FIGURE 2: Typical Anchoring/Joining Details

TABLE 1: Anchoring/Joining Methods Used for ENKAMAT

Anchoring/Joining Method	Recommended use with ENKAMAT
Pinning (¼" dia. X 12-30", J-shaped) (21 ga. x 18" w/ 1.5" dia. washers)	P
Stapling (6-12" x 12", 11 ga., U-shaped)	P
Staking (1"x 4" w 12-24 (w, bias cut)	S

Note: P= primary method used; S= secondary method used; n/a= method is *not applicable*.

EROSION & SEDIMENT CONTROL PLAN STANDARD NOTES

GENERAL NOTES

1. All earth disturbances, including clearing and grubbing as well as cuts and fills shall be done in accordance with the approved E&S plan. A copy of the approved drawings (stamped, signed and dated by the reviewing agency) must be available at the project site at all times. The reviewing agency shall be notified of any changes to the approved plan prior to implementation of those changes. The reviewing agency may require a written submittal of those changes for review and approval at its discretion.
2. At least 7 days prior to starting any earth disturbance activities, including clearing and grubbing, the owner and/or operator shall invite all contractors, the landowner, appropriate municipal officials, the E&S plan preparer, the PCSM plan preparer, the licensed professional responsible for oversight of critical stages of implementation of the PCSM plan, and a representative from the local conservation district to an on-site preconstruction meeting.
3. At least 3 days prior to starting any earth disturbance activities, or expanding into an area previously unmarked, the Pennsylvania One Call System Inc. shall be notified at 1-800-242-1776 for the location of existing underground utilities.
4. All earth disturbance activities shall proceed in accordance with the sequence provided on the plan drawings. Deviation from that sequence must be approved in writing from the local conservation district or by the Department prior to implementation.
5. Areas to be filled are to be cleared, grubbed, and stripped of topsoil to remove trees, vegetation, roots and other objectionable material.
6. Clearing, grubbing, and topsoil stripping shall be limited to those areas described in each stage of the construction sequence. General site clearing, grubbing and topsoil stripping may not commence in any stage or phase of the project until the E&S BMPs specified by the BMP sequence for that stage or phase have been installed and are functioning as described in this E&S plan.
7. At no time shall construction vehicles be allowed to enter areas outside the limit of disturbance boundaries shown on the plan maps. These areas must be clearly marked and fenced off before clearing and grubbing operations begin.
8. Topsoil required for the establishment of vegetation shall be stockpiled at the location(s) shown on the plan maps(s) in the amount necessary to complete the finish grading of all exposed areas that are to be stabilized by vegetation. Each stockpile shall be protected in the manner shown on the plan drawings. Stockpile heights shall not exceed 35 feet. Stockpile slopes shall be 2H:1V or flatter.
9. Immediately upon discovering unforeseen circumstances posing the potential for accelerated erosion and/or sediment pollution, the operator shall implement appropriate best management practices to minimize the potential for erosion and sediment pollution and notify the local conservation district and/or the regional office of the Department.
10. All building materials and wastes shall be removed from the site and recycled or disposed of in accordance with the Department's Solid Waste Management Regulations at 25 Pa. Code 260.1 et seq., 271.1, and 287.1 et. seq. No building materials or wastes or unused building materials shall be burned, buried, dumped, or discharged at the site.
11. All off-site waste and borrow areas must have an E&S plan approved by the local conservation district or the Department fully implemented prior to being activated.
12. The contractor is responsible for ensuring that any material brought on site is clean fill. Form FP-001 must be retained by the property owner for any fill material affected by a spill or release of a regulated substance but qualified as clean fill based on analytical testing.
13. All pumping of water from any work area shall be done according to the procedure described in this plan, over undisturbed vegetated areas.
14. Vehicles and equipment may neither enter directly nor exit directly from the site onto public streets.
15. Until the site is stabilized, all erosion and sediment BMPs shall be maintained properly. Maintenance shall include inspections of all erosion and sediment BMPs after each runoff event and on a weekly basis. All preventative and remedial maintenance work, including clean out, repair, replacement, regrading, reseeding, remulching and renetting must be performed immediately. If the E&S BMPs fail to operate as designed, replacement BMPs, or modifications of those installed will be required.
16. A log showing dates that E&S BMPs were inspected as well as any deficiencies found and the date they were corrected shall be maintained on the site and be made available to regulatory agency officials at the time of inspection.
17. Sediment tracked onto any public roadway or sidewalk shall be returned to the construction site by the end of each work day and disposed in the manner described in this plan. In no case shall the sediment be washed, shoveled, or swept into any roadside ditch, storm sewer, or surface water.
18. All sediment removed from BMPs shall be disposed of in the manner described on the plan drawings.
19. Areas which are to be topsoiled shall be scarified to a minimum depth of 3 to 5 inches (– 6 to 12 inches in compacted soils –) prior to placement of topsoil. Areas to be vegetated shall have a minimum 4 inches of topsoil in place prior to seeding and mulching. Fill outslopes shall have a minimum of 2 inches of topsoil.
20. All fills shall be compacted as required to reduce erosion, slippage, settlement, subsidence or other related problems. Fill intended to support buildings, structures and conduits, etc. shall be compacted in accordance with local requirements or codes.
21. All earthen fills shall be placed in compacted layers not to exceed 9 inches in thickness.
22. Fill materials shall be free of frozen particles, brush, roots, sod, or other foreign or objectionable materials that would interfere with or prevent construction of satisfactory fills.
23. Frozen materials or soft, mucky, or highly compressible materials shall not be incorporated into fills.
24. Fill shall not be placed on saturated or frozen surfaces.
25. Seeps or springs encountered during construction shall be handled in accordance with the standard and specification for subsurface drain or other approved method.
26. All graded areas shall be permanently stabilized immediately upon reaching finished grade. Cut slopes in competent bedrock and rock fills need not be vegetated. Seeded areas within 50 feet of a surface water, or as otherwise shown on the plan drawings, shall be blanketed according to the standards of this plan.
27. Immediately after earth disturbance activities cease in any area or subarea of the project, the operator shall stabilize all disturbed areas. During non-germinating months, mulch or protective blanketing shall be applied as described in the plan. Areas not at finished grade, which will be reactivated within 1 year, may be stabilized in accordance with the temporary stabilization specifications. Those areas which will not be reactivated within 1 year shall be stabilized in accordance with the permanent stabilization specifications.
28. Permanent stabilization is defined as a minimum uniform, perennial 70% vegetative cover or other permanent non-vegetative cover with a density sufficient to resist accelerated erosion. Cut and fill slopes shall be capable of resisting failure due to slumping, sliding, or other movements.
29. E&S BMPs shall remain functional as such until all areas tributary to them are permanently stabilized or until they are replaced by another BMP approved by the local conservation district or the Department.
30. Upon completion of all earth disturbance activities and permanent stabilization of all disturbed areas, the owner and/or operator shall contact the local conservation district for an inspection prior to removal/conversion of the E&S BMPs.
31. After final site stabilization has been achieved, temporary erosion and sediment BMPs must be removed or converted to permanent post construction stormwater management BMPs. Areas disturbed during removal or conversion of the BMPs shall be stabilized immediately. In order to ensure rapid revegetation of disturbed areas, such removal/conversions are to be done only during the germinating season.
32. Upon completion of all earth disturbance activities and permanent stabilization of all disturbed areas, the owner and/or operator shall contact the local conservation district to schedule a final inspection.
33. Failure to correctly install E&S BMPs, failure to prevent sediment-laden runoff from leaving the construction site, or failure to take immediate corrective action to resolve failure of E&S BMPs may result in administrative, civil, and/or criminal penalties being instituted by the Department as defined in Section 602 of the Pennsylvania Clean Streams Law. The Clean Streams Law provides for up to $10,000 per day in civil penalties, up to $10,000 in summary criminal penalties, and up to $25,000 in misdemeanor criminal penalties for each violation.
34. All channels shall be kept free of obstructions including but not limited to fill, rocks, leaves, woody debris, accumulated sediment, excess vegetation, and construction material/wastes.
35. Underground utilities cutting through any active channel shall be immediately backfilled and the channel restored to its original cross-section and protective lining. Any base flow within the channel shall be conveyed past the work area such restoration is complete.
36. Any damage that occurs in whole or in part as a result of basin or trap discharge shall be immediately repaired by the permittee in a permanent manner satisfactory to the municipality, local conservation district, and the owner of the damaged property.
37. Erosion control blanketing shall be installed on all slopes 3H:1V or steeper within 50 feet of a surface water and on all other disturbed areas specified on the plan maps and/or detail sheets.
38. Fill material for embankments shall be free of roots, or other woody vegetation, organic material, large stones, and other objectionable materials. The embankment shall be compacted in maximum 6 inch layered lifts at 95% standard proctor density.

GENERAL NOTES

1. DURING ALL PHASES OF CONSTRUCTION, EVERY REASONABLE MEANS SHALL BE TAKEN TO CONTROL SOIL EROSION AND PREVENT THE TRANSPORT OF SEDIMENT OFF SITE.
2. ALL SEDIMENT CONTROL DEVICES AND PRACTICES MUST BE INSTALLED PRIOR TO BEGINNING MAJOR GRADING, CLEARING OR CONSTRUCTION OPERATIONS. NO MAJOR OPERATIONS WILL BE CARRIED ON PRIOR TO THE COMPLETION OF SEDIMENT CONTROL DEVICES WITHOUT AUTHORIZATION OF THE LOCAL SEDIMENT CONTROL INSPECTOR.
3. STRAW BALE DIKES, SILT FENCES, ETC., WILL BE LOCATED AS CLOSELY AS POSSIBLE TO THE LOCATIONS SHOWN ON THE SEDIMENT CONTROL SITE PLAN. FIELD CHANGES AND MINOR ADJUSTMENTS ARE PERMISSIBLE AS LONG AS THE SEDIMENT CONTROL DEVICES FUNCTION AS ORIGINALLY INTENDED AND CONFORM TO SPECIFICATIONS.
4. COPY OF APPROVED SEDIMENT CONTROL PLAN SHALL BE AVAILABLE AT THE SITE AT ALL TIMES.
5. THE CONTRACTOR SHALL INSPECT ALL EROSION AND SEDIMENT CONTROL DEVICES AFTER EACH RAIN AND PERFORM NECESSARY REPAIRS AND MAINTENANCE.
6. SEDIMENT CONTROL DEVICES SHALL BE REMOVED ONLY WITH THE AUTHORIZATION OF THE LOCAL SEDIMENT CONTROL INSPECTOR.
7. REFER TO USDA-SOIL CONSERVATION SERVICE "STANDARDS AND SPECIFICATIONS FOR SOIL EROSION AND SEDIMENT CONTROL IN DEVELOPING AREAS" FOR STANDARD DETAILS AND DETAILED SPECIFICATIONS OF EACH PRACTICE SPECIFIED HEREIN.
8. WITH THE APPROVAL OF THE SEDIMENT CONTROL INSPECTOR, MINOR FIELD ADJUSTMENTS CAN AND WILL BE MADE TO INSURE THE CONTROL OF ANY SEDIMENT. CHANGES IN SEDIMENT CONTROL PRACTICES REQUIRE PRIOR APPROVAL OF THE REPRESENTING SEDIMENT CONTROL INSPECTOR.
9. ANY DISTURBED EARTH LEFT IDLE FOR PERIODS EXCEEDING 20 DAYS SHALL BE STABILIZED ACCORDING TO TEMPORARY STABILIZATION SPECIFICATIONS.
10. DUST CONTROL WILL BE PROVIDED FOR ALL DISTURBED AREAS. REFER TO USDA-SOIL CONSERVATION SERVICE "STANDARDS AND SPECIFICATIONS FOR SOIL EROSION AND SEDIMENT CONTROL IN DEVELOPING AREAS" PP 62.01 AND 62.02 FOR ACCEPTABLE METHODS AND SPECIFICATIONS FOR DUST CONTROL.

MAINTENANCE BMP'S

TEMPORARY CONTROLS:
THE CONTRACTOR WILL BE RESPONSIBLE FOR THE INSTALLATION AND MAINTENANCE OF ALL THE TEMPORARY EROSION AND SEDIMENTATION MEASURES TO BE IMPLEMENTED AS PART OF CONSTRUCTION AS FOLLOWS, BUT NOT LIMITED TO:

STABILIZATION:
1. UNTIL THE SITE HAS ACHIEVED FINAL STABILIZATION THE OWNER AND/OR CONTRACTOR SHALL PROPERLY IMPLEMENT, OPERATE AND MAINTAIN ALL THE BEST MANAGEMENT PRACTICES. MAINTENANCE SHALL INCLUDE INSPECTIONS OF ALL EROSION AND SEDIMENTATION CONTROLS AFTER EACH RUNOFF EVENT AND ON A WEEKLY BASIS. ALL PREVENTATIVE AND REMEDIAL MAINTENANCE WORK, INCLUDING CLEAN OUT, REPAIR, REPLACEMENT, REGRADING, RESEEDING, REMULCHING, AND RENETTING, MUST BE PERFORMED IMMEDIATELY.
2. STOCKPILE HEIGHTS MUST NOT EXCEED 35 FEET. STOCKPILE SLOPES MUST BE 2:1 OR FLATTER.
3. STOCKPILES MUST BE STABILIZED IMMEDIATELY.
4. AN AREA SHALL BE CONSIDERED TO HAVE ACHIEVED FINAL STABILIZATION WHEN IT HAS A MINIMUM OF 70% UNIFORM PERENNIAL VEGETATIVE COVER OR OTHER PERMANENT NON-VEGETATIVE COVER WITH A DENSITY SUFFICIENT TO RESIST ACCELERATED SURFACE EROSION AND SUBSURFACE CHARACTERISTICS SUFFICIENT TO RESIST SLIDING OR OTHER MOVEMENTS.

PUMPED WATER FILTER BAGS
1. PUMPED WATER FILTER BAGS AREA TO BE USED FOR ALL INCIDENTAL DEWATERING OPERATIONS.

EROSION CONTROL BLANKET (STEEP SLOPES & CHANNELS)
1. BLANKETED AREAS SHALL BE INSPECTED WEEKLY AND AFTER EACH RUNOFF EVENT UNTIL PERENNIAL VEGETATION IS ESTABLISHED TO A MINIMUM UNIFORM 70% COVERAGE THROUGHOUT THE BLANKETED AREA. DAMAGED OR DISPLACED BLANKETS SHALL BE RESTORED OR REPLCED WITHIN 4 CALENDAR DAYS.

COMPOST FILTER SOCKS:
1. COMPOST FILTER SOCK MUST BE INSTALLED AT GRADE LEVEL. BOTH ENDS OF EACH BARRIER MUST EXTEND AT LEAST 8 FEET UPSLOPE AT 45 DEGREES TO THE MAIN BARRIER ALIGNMENT.
2. COMPOST FILTER SOCKS SHALL BE CHECKED WEEKLY AND AFTER EACH PRECIPITATION EVENT. COMPOST FILTER SOCKS SHOULD BE REGULARLY INSPECTED TO MAKE SURE THEY HOLD THEIR SHAPE AND ARE PRODUCING ADEQUATE FLOW THROUGH. IF PONDING BECOMES EXCESSIVE, AND SEDIMENT REACHES THE TOP OF THE COMPOST FILTER SOCK, ADDITIONAL COMPOST FILTER SOCKS SHOULD BE ADDED IN THE AREAS WITHOUT DISTURBANCE OF SOIL OR COLLECTED SEDIMENT.
3. SEDIMENT MUST BE REMOVED WHEN ACCUMULATIONS REACH 1/2 THE ABOVE GROUND HEIGHT OF THE BARRIER.
4. ANY COMPOST FILTER SOCK WHICH HAS BEEN UNDERMINED OR TOPPED MUST BE IMMEDIATELY REPLACED WITH A ROCK FILTER OUTLET.
5. WHEN CONSTRUCTION IS COMPLETED ON SITE, THE COMPOST FILTER SOCKS MAY BE DISPERSED WITH A LOADER, RAKE, BULLDOZER OR OTHER DEVICE TO BE INCORPORATED IN THE SOIL OR LEFT ON TOP OF THE SOIL FOR FINAL SEEDING TO OCCUR. THE MESH NETTING MATERIAL WILL BE COLLECTED AND DISPOSED OF IN NORMAL TRASH CONTAINER OR REMOVED BY THE CONTRACTOR. IN CASES WHERE BIODEGRADABLE OR PHOTODEGRADABLE PRODUCTS ARE USED, THEY MAY BE LEFT ON SITE AT THE DIRECTION OF THE ENGINEER.

ROCK CONSTRUCTION ENTRANCE:
1. THE STRUCTURE'S THICKNESS WILL BE CONSTANTLY MAINTAINED TO THE SPECIFIED DIMENSIONS BY ADDING ROCK. A STOCKPILE OF ROCK WILL BE MAINTAINED ON THE SITE OR BE READILY ACCESSIBLE FOR THIS PURPOSE. AT THE END OF EACH CONSTRUCTION DAY, ALL SEDIMENT DEPOSITED ON PUBLIC ROADWAYS WILL BE REMOVED AND RETURNED TO THE CONSTRUCTION SITE. WASHING OF PUBLIC ROADWAYS WITH WATER IS NOT PERMITTED.

CONCRETE WASH-OUT:
1. WHEREVER COMPOST SOCK WASHOUTS ARE USED, A SUITABLE IMPERVIOUS GEOMEMBRANE SHOULD BE PLACED AT THE LOCATION OF THE WASHOUT.
2. COMPOST SOCKS SHOULD BE INSTALLED IN THE MANNER RECOMMENDED BY THE MANUFACTURER AROUND PERIMETER OF THE GEOMEMBRANE SO AS TO FORM A RING WITH THE ENDS OF THE SOCK LOCATED AT THE UPSLOPE CORNER.
3. CARE SHOULD BE TAKEN TO ENSURE CONTINUOUS CONTACT OF THE SOCK WITH THE GEOMEMBRANE AT ALL LOCATIONS.
4. WHERE NECESSARY, SOCKS MAY BE STACKED AND STAKED SO AS TO FORM A TRIANGULAR CROSS SECTION.
5. ALL CONCRETE WASHOUT FACILITIES SHOULD BE INSPECTED DAILY. DAMAGED OR LEAKING WASHOUTS SHOULD BE DEACTIVATED AND REPAIRED OR REPLACED IMMEDIATELY.
6. ACCUMULATED MATERIALS SHOULD BE REMOVED WHEN THEY REACH 75% CAPACITY.
7. PLASTIC LINERS SHOULD BE REPLACED WITH EACH CLEANING OF THE WASHOUT FACILITY

ROCK FILTER OUTLETS:
1. SEDIMENT MUST BE REMOVED WHEN ACCUMULATIONS REACH 1/3 THE HEIGHT OF THE OUTLETS.
2. THE HEIGHT OF THE ROCK FILTER SHOULD EQUAL 5/6 THE HEIGHT OF THE STRAW BALES OR FILTER FABRIC.

STORMWATER\SEDIMENTATION BASIN:
1. THE BASIN SHALL BE CHECKED DAILY AND IMMEDIATELY AFTER A STORM EVENT AND SHALL BE CLEANED AND REPAIRED AS NECESSARY.
2. SEDIMENT SHALL BE CLEANED OUT WHEN THE MARKED SEDIMENT LEVEL IS REACHED ON THE TEMPORARY SEDIMENTATION CONTROL STANDPIPE (SEE STANDPIPE MAINTENANCE SECTION).
3. LL AREAS OF THE BASIN SHALL BE VEGETATED AND SHALL BE RESEEDED AS NECESSARY.

TEMPORARY SEDIMENTATION CONTROL STANDPIPE:
1. THE STRUCTURE SHALL BE CHECKED DAILY AND IMMEDIATELY AFTER A STORM EVENT.
2. ALL SEDIMENT SHALL BE CLEANED OUT OF THE POND WHEN SEDIMENT LEVEL REACHES THE FIRST ROW OF PERFORATIONS ON THE STANDPIPE.
3. WHEN SEDIMENT IS REMOVED FROM THE POND, THE STANDPIPE FILTERING STONE SHALL ALSO BE REPLACED.

TEMPORARY SEEDING
PLANTING AND SEEDING DATES EXTEND FROM MARCH 15TH TO OCTOBER 15TH. INTERIM STABILIZATION WILL BE ACHIEVED BY MULCHING.

AREAS TO BE TEMPORARILY SEEDED WILL BE PLANTED WITH RYEGRASS, LOLIUM SPECIES, (1000) AT A RATE OF 44 LBS. PER ACRE. BEFORE TEMPORARILY SEEDING, FERTILIZE WITH BASIC FERTILIZER (5-5-5) AT A RATE OF 1000 LBS. PER ACRE AND LIME AT A RATE OF ONE (1) TON PER ACRE. TEMPORARILY SEEDED AREAS WILL BE FERTILIZED WITH BASIC FERTILIZER (20-20-20) AT A RATE OF 20 LBS. PER THOUSAND SQUARE FEET (1,000 SQ. FT.) IMMEDIATELY BEFORE SEEDING. AFTER SEEDING, THE TEMPORARILY SEEDED AREAS WILL BE MULCHED WITH WOOD CELLULOSE FIBER AT A RATE OF THREE (3) TONS PER ACRE.

PERMANENT SEEDING
PLANTING AND SEEDING DATES EXTEND FROM MARCH 15 TO JUNE 1 AND AUGUST 1 TO OCTOBER 15, UNLESS OTHERWISE DIRECTED. INTERIM STABILIZATION WILL BE ACHIEVED BY MULCHING. THE OWNER WILL BE RESPONSIBLE FOR THE MAINTENANCE OF ALL PERMANENT EROSION AND SEDIMENTATION CONTROL MEASURES AFTER CONSTRUCTION IS COMPLETED.

SEED:
1. ALL SEEDS, AS SPECIFIED WILL CONFORM TO THE PENNSYLVANIA SEED ACT OF 1965, AS AMENDED, AND REGULATIONS OF THE PENNSYLVANIA DEPARTMENT OF AGRICULTURE, BUREAU OF PLANT INDUSTRY.
2. THE PERCENTAGE OF PURE SEED PRESENT WILL REPRESENT THE FREEDOM OF SUCH AGRICULTURAL SEEDS FROM INERT MATTER AND FROM OTHER SEEDS DISTINGUISHABLE BY THEIR APPEARANCE. THE PERCENTAGE OF GERMINATION SHOWN WILL BE ACTUAL SPROUTS AND WILL NOT INCLUDE HARD SEEDS, UNLESS SPECIFICALLY PERMITTED. ALL SEEDS PROPOSED UNDER THIS ITEM WILL BE SUBJECT TO ANALYSIS TEST BY THE COMMONWEALTH OF PENNSYLVANIA, DEPARTMENT OF AGRICULTURE, BUREAU OF PLANT INDUSTRY, AND WILL MEET THESE SPECIFICATIONS. NO SEED WILL BE ACCEPTED WITH A TEST DATE OF MORE THAN SIX MONTHS PRIOR TO THE DATE OF SOWING AND WILL BE OF THE MOST RECENT CROP.
3. ALL SEEDS WILL BE FURNISHED TO THE PROJECT SITE IN MIX PREPARED BY THE SEED PROCESSOR. THE MIX SHALL HAVE A CERTIFICATION TAG THAT SHALL BE KEPT BY OWNER UNTIL STABILIZATION. SEED MIXTURES WILL BE AS FOLLOWS:

Seed mixtures will be as follows (PennDOT Formula B plus nurse crop of spring oats):

MIX	%MIX	PURITY	GERMINATION	RATE / 1000 SF
Perennial Ryegrass Mixture	20	98	90	4.00 lb.
Creeping Red Fescue	30	98	85	6.00 lb.
Kentucky Bluegrass	50	98	80	11.00 lb.
Spring Oats **		98	85	13.00 lb.

**Nurse crop added to PennDOT Formula B

STARTER FERTILIZER:
1. IMMEDIATELY BEFORE PERMANENT SEEDING, APPLY A STARTER FERTILIZER BY DISCING DOLOMITIC LIMESTONE AT A RATE OF 4 TONS PER ACRE, BASIC FERTILIZER (10-20-20) AT A RATE OF 1000 LBS PER ACRE AND 25 LBS. OF 10-6-4, 50% ORGANIC NITROGEN PER THOUSAND SQUARE FEET (1,000 SQ. FT.). AT LEAST THIRTY-FIVE PERCENT (35%) OF THE TOTAL NITROGEN WILL BE WATER INSOLUBLE (NITROGEN FROM NATURAL ORGANIC SOURCES SUCH AS UREAFORM).

MULCHING:
1. HAY OR STRAW MULCH MUST BE APPLIED AT RATES OF AT LEAST 3.0 TONS PER ACRE. MULCH CONSISTING OF NATIVE OR AGRICULTURAL GRASSES SUCH AS WHEAT OR OATS STRAW WILL BE PLACED OVER ALL LAWN AREAS WITHIN FORTY-EIGHT (48) HOURS AFTER RAKING AND SEEDING OR PLANTING HAS BEEN PERFORMED. SALT HAY OR OTHER SALINE MARSH GRASSES ARE NOT ACCEPTABLE. THE MATERIAL WILL BE APPLIED AT AN AVERAGE MINIMUM DEPTH OF TWO INCHES (2") LOOSE MEASUREMENT. CARE WILL BE TAKEN WHEN PLACING THE MULCH SO AS NOT TO DISTURB THE SEEDED SURFACES. THE MULCH WILL BE SECURED BY ONE OR SEVERAL OF THE FOLLOWING METHODS, DEPENDING ON THE SIZE OF THE AREA, STEEPNESS OF SLOPE, AVAILABILITY OF EQUIPMENT AND COSTS.
2. PEGS AND TWINE MAY BE USED TO SECURE MULCH. DRIVE EIGHT-TO-TEN-INCH (8" – 10") WOODEN PEGS TO WITHIN TWO-TO-THREE INCHES (2" – 3") OF THE SOIL SURFACE EVERY FOUR FEET (4') IN ALL DIRECTIONS BEFORE OR AFTER APPLYING MULCH. SECURE MULCH TO SOIL SURFACE BY STRETCHING TWINE BETWEEN PEGS IN A CROSS-CROSS WITHIN A SQUARE PATTERN. SECURE TWINE AROUND EACH PEG WITH TWO OR MORE ROUND TURNS.
3. EMULSIFIED ASPHALT MAY BE USED TO SECURE MULCH. EMULSION WILL CONFORM TO REQUIREMENTS OF AASHTO GRADE RS-1 OR PENNSYLVANIA DEPARTMENT OF TRANSPORTATION BULLETIN NO. 25 FOR CLASS E-1 OR E-6. EMULSION WILL BE HOMOGENEOUS AND WILL BE MISCIBLE WITH WATER. IT WILL CONTAIN NO SOLVENTS OR OTHER DILATIVE AGENTS TOXIC TO PLANT LIFE AND NOT MORE THAN 0.75 PERCENT OF SAPONIFIABLE ACIDS. APPLY UNIFORMLY AT THE RATE OF TWENTY-EIGHT (28) GALLONS PER ONE THOUSAND SQUARE YARDS (1,000 SQ. YD.).
4. THE CONTRACTOR WILL, DURING THE LIFE OF THE CONTRACT, PROPERLY CARE FOR ALL AREAS AND MULCHES, PERFORMING SUCH REMULCHING AS NECESSARY TO PROVIDE PROTECTION FOR ESTABLISHED GROWTH ON THE TREATED AREA.

PHASE 1 SEQUENCE OF CONSTRUCTION

CONSTRUCTION IS ANTICIPATED TO BEGIN FALL 2021 AND FINAL STABILIZATION TO BE ACCOMPLISHED BY FALL 2022.

All earth disturbance activities shall proceed in accordance with the following sequence. Each stage shall be completed and immediately stabilized before any following stage is initiated. Clearing, grubbing and topsoil stripping shall be limited only to those areas described in each stage of the construction sequence. General site clearing, grubbing and topsoil stripping may not commence in any stage or Phase of the project until the E&S BMPs specified by the BMPs sequence for that stage or Phase have been installed and are functioning as described in this E&S Plan. Any deviation from the following sequence must be approved in writing from the Cumberland County Conservation District.

CONSTRUCTION Phase 1:
1. The Contractor will submit written notification to Cumberland County Conservation District at least 7 days prior to the start of the construction.
2. At least 7 days before starting any earth disturbance activities, the owner and/or operator shall invite all contractors involved in those activities, the landowner, all appropriate municipal officials, the erosion and sediment control plan preparer, the licensed professional responsible for oversight of critical stages of implementation of the PCSM plan, and a representative of the Cumberland County Conservation District to an on-site pre-construction meeting.
3. At least 3 days before starting any earth disturbance activities, all contractors involved in those activities shall notify the Pennsylvania One Call System incorporated at 811 for the location of existing underground utilities.
4. Coordinate site work with HOP work in Grantham Road.
5. Field mark the Limits of Disturbance and any existing trees to be saved.
6. Install the Rock Construction Entrance to Grantham Road.
7. Install inlet filter bags and PROVIDING socks as shown on plan.
8. Clear and grub the site area encompassed by Construction Phase 1. Remove and dispose of waste materials offsite in accordance with DEP Solid Waste Management Regulations.
9. Strip and stockpile topsoil and surround it with compost filter sock.
10. Rough grade the Phase 1 area. Do not allow machinery with a ground pressure greater than four pounds per square foot to work in the detention basin.
11. Immediately install steep slope protection and prepare for mulch/seed.
12. *Construct sediment basin and install outfall structure with skimmer, pipe and rock filter with compost.
13. Upon completion of sediment basin prepare for mulch/seed. Mulch planted and disturbed areas with compost mulch to prevent erosion while temporary seeding becomes established.
14. Install stormwater conveyance piping for Phase 1. Install piping from downstream ends. Immediately install inlet filter bags and outlet protection.
15. Install swales 1 and 2. Immediately install erosion control blankets for swale protection from erosion, prepare for mulch/seed.
16. Install sanitary sewer system for Phase 1 from the connection point in Grantham Road through the Phase 1 portion of the development. Provide stub and marker for connection during Phase 2.
17. Install domestic water conveyance system from the connection point in Grantham Road through the Phase 1 portion of the development. Provide stub and marker for connection during Phase 2.
18. Install remaining utilities for Phase 1 portion of the development. Provide stubs and markers for utilities to be extended into Phase 2.
19. Final grade roads, sidewalks and residential areas.
20. Begin residential home construction.
21. Place stone sub-base for roads and curbs.
22. Install concrete curbing.
23. Place base paving.
24. Complete the wearing course paving and installation of sidewalks.
25. Install topsoil in landscape areas and prepare for mulch/seed upon completion.
26. *Install approved landscape plants, and stabilize areas of disturbance.
27. Permanently seed and mulch all disturbed areas as described in the E&S Notes.
28. *Permanently stabilize any areas disturbed that have not become stabilized.
29. Upon completion of all earth disturbance activities and permanent stabilization of all disturbed areas, the Owner and Operators shall contact the Cumberland County Conservation District for a final inspection prior to the removal of the BMP's. Cumberland County Conservation District shall approve the stabilization of the site.
30. Upon approval from the Cumberland County Conservation District for permanent stabilization, removal of all temporary BMP's
31. *Install permanent stabilization at detention facility

* Denotes a critical stage of construction that must be observed and inspected by a licensed professional (or designee).
- Sediment Basin grading.
- Installation of outlet structure, anti-seep collars and anti-vortex device at sediment basin.
- Conversion of sediment basin to detention basin facility:
  - o Sediment removal and additional 6-inches for topsoil placement.
  - o Topsoil placement
  - o Conversion of outlet structure from sediment basin to detention basin.
- Landscaping installation.
- Permanent stabilization.

Note: The following apply to all stages of construction.
1. Upon completion of an earth disturbance activity or any stage or Phase of an activity, the site shall be immediately seeded, mulched or otherwise protected from accelerated erosion and sedimentation.
2. Erosion and sediment control BMPs shall be implemented and maintained until the permanent stabilization is complete.
3. For an earth disturbance activity or any stage or Phase of an activity to be considered permanently stabilized, the disturbed area shall be covered with one of the following: (1) A minimum uniform 70% perennial vegetative cover, with a density capable of resisting accelerated erosion and sedimentation. (2) An acceptable BMP which permanently minimizes accelerated erosion and sedimentation.
4. Install all post construction BMPs in accordance with installation information provided on the PCSM plans.

PHASE 2 SEQUENCE OF CONSTRUCTION

CONSTRUCTION IS ANTICIPATED TO BEGIN FALL 2022 AND FINAL STABILIZATION TO BE ACCOMPLISHED BY FALL 2023.

All earth disturbance activities shall proceed in accordance with the following sequence. Each stage shall be completed and immediately stabilized before any following stage is initiated. Clearing, grubbing and topsoil stripping shall be limited only to those areas described in each stage of the construction sequence. General site clearing, grubbing and topsoil stripping may not commence in any stage or Phase of the project until the E&S BMPs specified by the BMPs sequence for that stage or Phase have been installed and are functioning as described in this E&S Plan. Any deviation from the following sequence must be approved in writing from the Cumberland County Conservation District.

CONSTRUCTION Phase 2:
1. The contractor will submit written notification to Cumberland County Conservation District at least seven (7) days prior to the start of construction.
2. At least 7 days before starting any earth disturbance activities, the owner and/or operator shall invite all contractors involved in those activities, the landowner, all appropriate municipal officials, the erosion and sediment control plan preparer, the licensed professional responsible for oversight of critical stages of implementation of the PCSM plan, and a representative of the Cumberland County Conservation District to an on-site pre-construction meeting.
3. At least 3 days before starting any earth disturbance activities, all contractors involved in those activities shall notify the Pennsylvania One Call System incorporated at 811 for the location of existing underground utilities.
4. Field mark the Limits of Disturbance and mark are of rain garden and detention facility and infiltration berms with orange construction fencing and prohibit heavy machinery traffic to reduce compaction in infiltration areas.
5. Field mark wetlands and trees to be protected with orange construction fencing. Prohibit equipment encroachment into protected areas.
6. Install the Rock Construction Entrance for Phase 2 on Upper Entrance Road as shown on plan.
7. Install perimeter compost filter socks as shown on plan.
8. Clear and grub the site area encompassed by Construction Phase 2 including the area for the sediment basin near the Yellow Breeches Creek. Remove and dispose of waste materials offsite in accordance with DEP Solid Waste Management Regulations.
9. Strip and stockpile topsoil and surround it with compost filter sock.
10. Rough grade

LEGEND

- RIGHT-OF-WAY LINE
- PROPERTY LINE
- ADJOINING PROPERTY LINE
- PROPOSED PROPERTY LINE
- EXISTING ROAD CENTER LINE
- PROPOSED ROAD CENTER LINE
- BUILDING SEPARATION LINE
- EXISTING EASEMENT LINE
- PROPOSED EASEMENT LINE
- EXISTING CONTOUR LINE
- PROPOSED CONTOUR LINE
- EXISTING EDGE OF PAVEMENT
- PROPOSED EDGE OF PAVEMENT
- CLEAR SIGHT TRIANGLE
- TOWNSHIP/BORO/COUNTY LINE
- SOIL BOUNDARY LINE
- PHASE LINE
- EXISTING SANITARY SEWER/MANHOLE
- PROPOSED SANITARY SEWER/MANHOLE
- PROPOSED LATERAL – SINGLE WYE
- CLEANOUT
- STORM PIPE END SECTION
- EXISTING STORM SEWER
- PROPOSED STORM SEWER
- PROPOSED UNDERDRAIN
- EXISTING STORM INLET
- PROPOSED STORM INLET
- EXISTING WATER LINE
- PROPOSED WATER LINE
- EXISTING WATER VALVE
- PROPOSED WATER VALVE
- EXISTING FIRE HYDRANT
- PROPOSED FIRE HYDRANT
- EXISTING ELECTRIC WITH UTILITY POLE
- PROPOSED ELECTRIC WITH UTILITY POLE
- PROPOSED STREET LIGHT
- PROPOSED STREET SIGNS
- EXISTING CONCRETE CURB
- PROPOSED CONCRETE CURB
- EXISTING TREE LINE
- EXISTING TREE
- PROPOSED TREE
- PROPERTY CORNER
- PROPOSED CONCRETE MONUMENT
- EXISTING SLOPES > 15%
- EXISTING STRUCTURES OR FEATURES
- PROPOSED STRUCTURE
- EXISTING FENCE LINE
- PROPOSED FENCE LINE
- LIMIT OF CONSTRUCTION
- HDPE — SMOOTH LINED CORRUGATED POLY PIPE
- CPP — CORRUGATED POLY PIPE
- SOIL TEST LOCATION

architecture
engineering
landscape architecture
planning
surveying

melham ASSOCIATES, PC

2247 North Front Street
Harrisburg, PA 17110

tel 717 238 5000

fax 717 236 2600

www.melham.com

0 10 20 30 40 50

CLIENT

Estate of
Martha Joan Banzhoff
c/o Harry G. Banzhoff,
Executor

2308 STUMPSTOWN ROAD
MECHANICSBURG, PA 17055
(717) 691-5572

PROJECT

Banzhoff Tract

UPPER ALLEN TOWNSHIP, CUMBERLAND COUNTY, PA

PHASE

PRELIMINARY

DRAWING

POST CONSTRUCTION
STORMWATER
MANAGEMENT PLAN
SHEET 1 OF 3

© 2021 MELHAM ASSOCIATES PC

SCALE

1" = 50'

JOB #

7680

CADD

7680C-5.dwg

DATE

7/27/21

SHEET

C-5.1

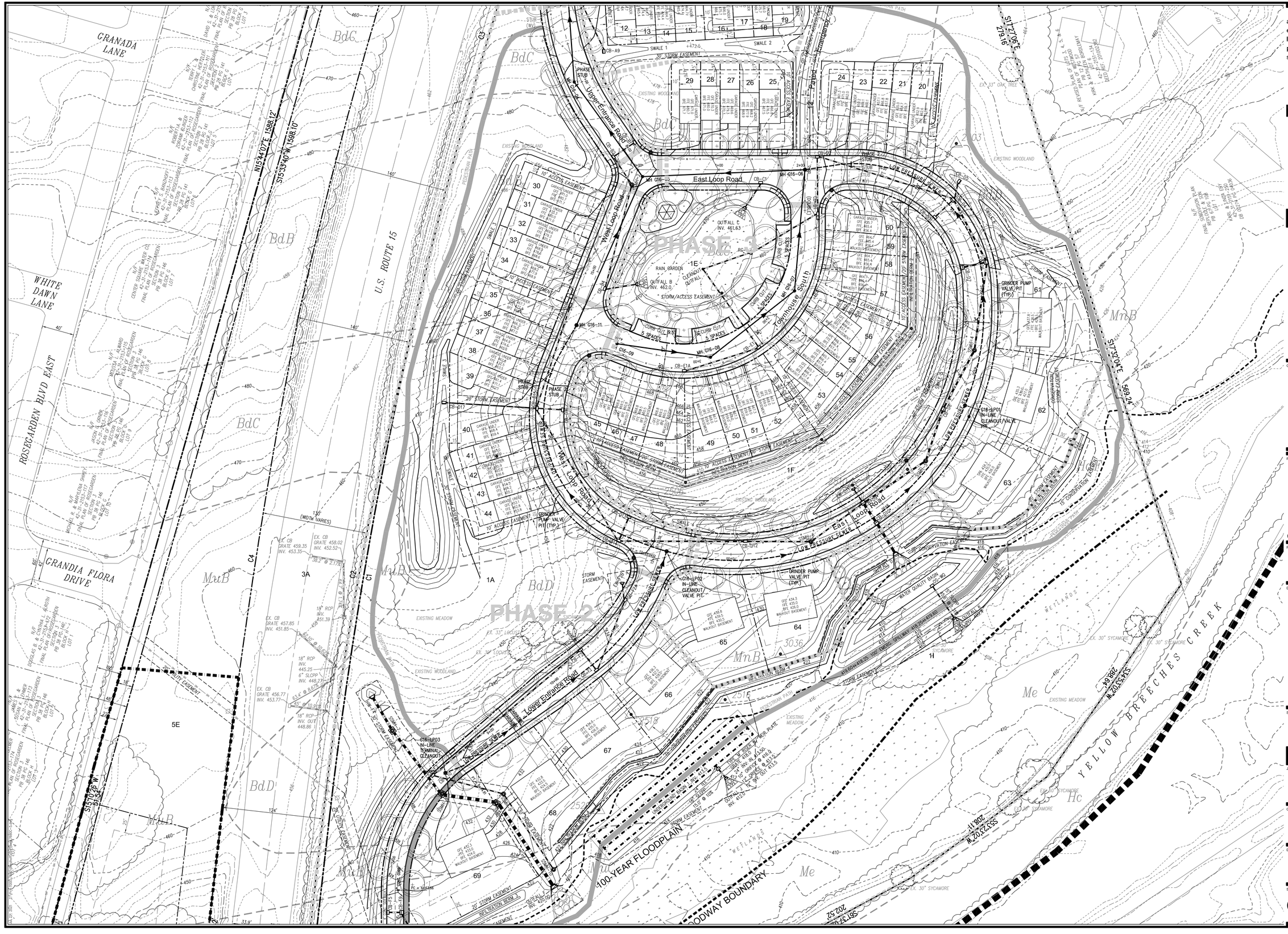
PHASE 1
PHASE 2
East Loop Road
West Loop Road
Upper Entrance Road
Lower Entrance Road
Townhouse South
East Loop Road
U.S. ROUTE 15
CRANADA LANE
WHITE DAWN LANE
ROSEGARDEN BLVD EAST
GRANDIA FLORA DRIVE
N54°40'7"E 1588.12'
S15°33'40"W 1588.10'
S17°27'06"E 279.16'
S72°32'04"E 569.24'
S15°07'26"W 95.35'
S36°37'02"W 208.11'
S54°37'02"W 288.64'
100-YEAR FLOODPLAIN
FLOODWAY BOUNDARY
YELLOW BREECHES CREEK
WETLANDS
EXISTING WOODLAND
EXISTING MEADOW
LOW PRESSURE SEWER
STORM EASEMENT
10' ACCESS EASEMENT
20' STORM EASEMENT
CONSERVATION EASEMENT
RETAINING WALL
WATER QUALITY BASIN
OUTFALL C
INV. 461.63
OUTFALL B
INV. 462.0
RAIN GARDEN
GRINDER PUMP VALVE PIT (TYP.)
G16-LP01 IN-LINE CLEANOUT/ VALVE PIT
G16-LP02 IN-LINE CLEANOUT/ VALVE PIT
G16-LP03 IN-LINE TERMINAL CLEANOUT
MH G16-03
MH G16-09
MH G16-11
CB-A9
CB-01
CB-02
CB-03
CB-04
CB-05
CB-06
CB-07
CB-08
CB-09
CB-10
CB-11
CB-12
CB-13
CB-14
CB-15
CB-16
CB-17
CB-18
CB-19
CB-20
CB-21
CB-22
CB-23
CB-24
CB-25
CB-26
CB-27
CB-28
CB-29
CB-30
CB-31
CB-32
CB-33
CB-34
CB-35
CB-36
CB-37
CB-38
CB-39
CB-40

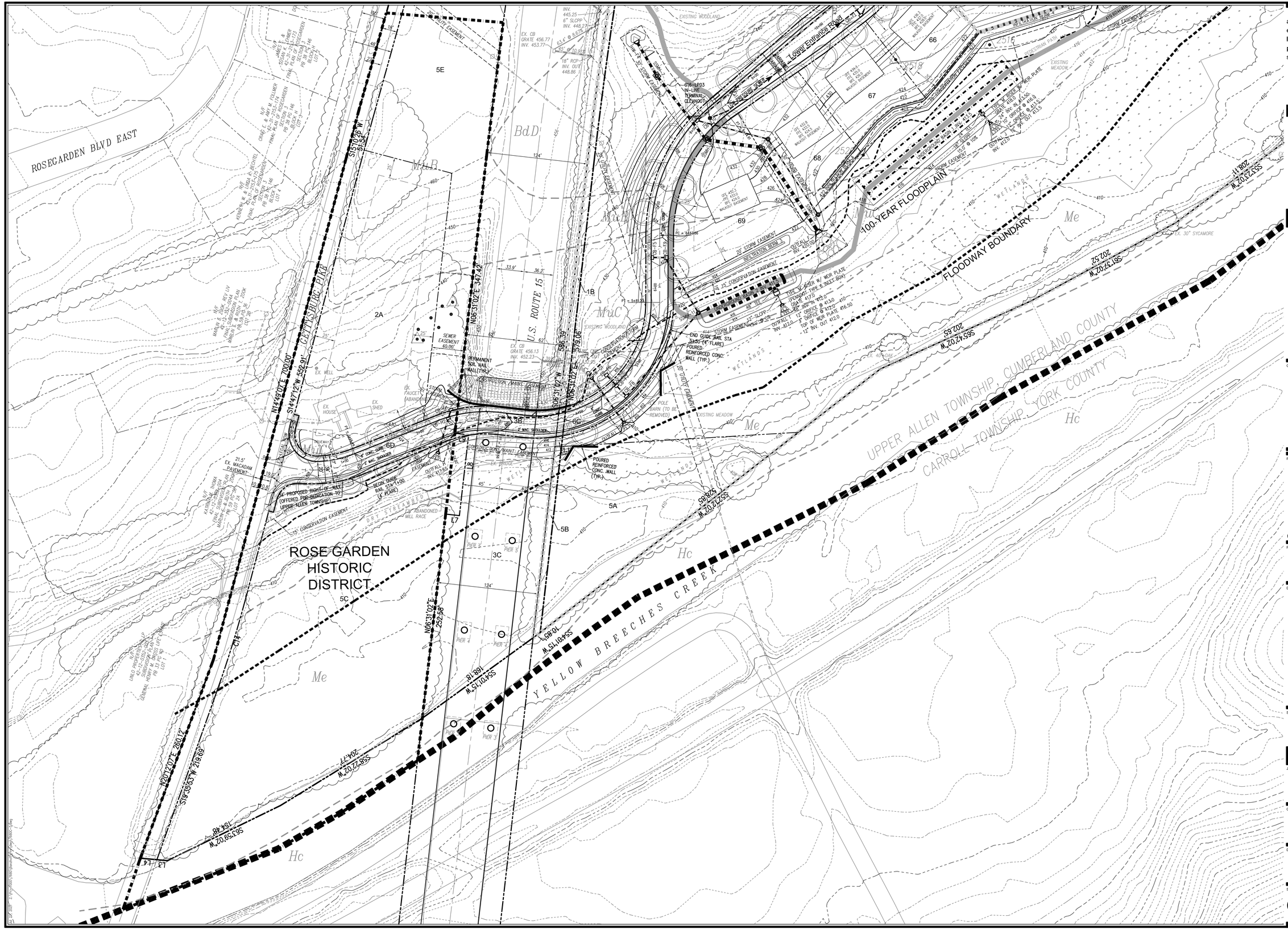
ROSEGARDEN BLVD EAST
COTTYSBURG DAM
U.S. ROUTE 15
Lower Entrance Road
100-YEAR FLOODPLAIN
FLOODWAY BOUNDARY
ROSE GARDEN HISTORIC DISTRICT
UPPER ALLEN TOWNSHIP, CUMBERLAND COUNTY
CARROLL TOWNSHIP, YORK COUNTY
YELLOW BREECHES CREEK
WETLANDS
20' STORM EASEMENT
15' CONSERVATION EASEMENT
PROPOSED RIGHT-OF-WAY (OFFERED FOR DEDICATION TO UPPER ALLEN TOWNSHIP)
PERMANENT SOIL NAIL WALL (TYP.)
POURED REINFORCED CONC. WALL (TYP.)
INFILTRATION BERM
EX. 30" SYCAMORE
EX. 24" OAK
EX. 30" OAK
EX. 36" OAK
EX. 30" MAPLE
EX. 24" MAPLE
EX. 18" MAPLE
EX. 36" MAPLE

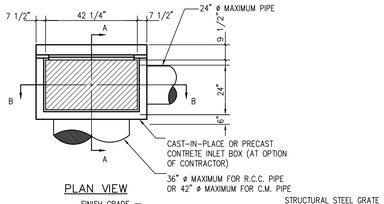

PLAN VIEW

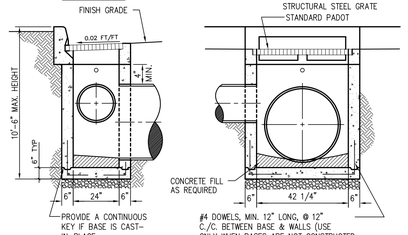

SECTION A–A

SECTION B–B

NOTES:
1. SEE SITE PLAN FOR INLET LOCATIONS, PIPE SIZES & INVERT ELEVATIONS.
2. INLETS & GRATES ARE TO BE CONSTRUCTED AS PER PADOT RC-34 SPECIFICATIONS.
3. CAST HOLES IN INLET BOXES AS REQUIRED TO MEET PLAN PIPING DESIGN.
4. INLETS THAT EXCEED THE MAXIMUM HEIGHT WILL REQUIRE A SPECIAL DESIGN.
5. INLET BOTTOM TO BE SHAPED TO CHANNEL FLOW TOWARD OUTLET PIPE.
6. PLACE INLET BOXES ON THOROUGHLY COMPACTED PA. NO. 2A AGGREGATE (6" MIN. DEPTH) TO MEET ENGINEER'S SATISIFICATION.
7. CONSTRUCT INLETS THAT EXCEED 5 FEET IN HEIGHT WITH STEPS SIMILAR TO MANHOLES.
8. USE OVERSIZED INLET BOXES WHERE REQUIRED.
9. ALL INLETS WITHIN A STREET SHALL BE DEPRESSED TWO INCHES BELOW THE GRADE OF THE GUTTER LINE.

STANDARD PADOT TYPE 'C' INLET

NO SCALE

C222A
11/15/99

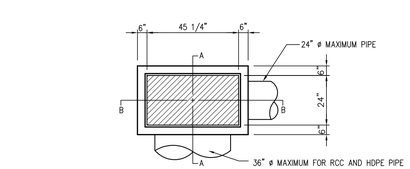

PLAN VIEW

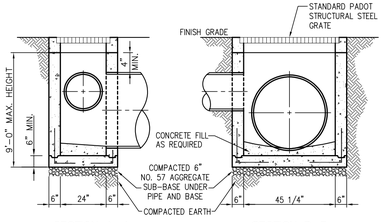

SECTION A–A

SECTION B–B

NOTES:
1. SEE SITE PLAN FOR INLET LOCATIONS, PIPE SIZES AND INVERT ELEVATIONS.
2. INLETS AND GRATES ARE TO BE CONSTRUCTED AS PER PennDOT RC-34 SPECIFICATIONS.
3. INLETS THAT EXCEED THE MAXIMUM HEIGHT WILL REQUIRE A SPECIAL DESIGN.
4. INLET BOTTOM TO BE SHAPED TO CHANNEL FLOW TOWARD OUTLET PIPE UNLESS SUMP BOTTOM IS SPECIFIED..
5. CONSTRUCT INLETS THAT EXCEED 5 FEET IN HEIGHT WITH STEPS SIMILAR TO MANHOLES, SEE STEP DETAIL.
6. USE OVERSIZED INLET BOXES WHERE REQUIRED.
7. STORM INLETS AND SYSTEM INTERIOR SHALL BE CLEAN OF ALL DEBRIS PRIOR TO PLACING STORM COLLECTION SYSTEM IN OPERATION.
8. INLET GRATES IN PAVED OR TRAFFIC AREAS SHALL HAVE BICYCLE SAFE GRATES.
9. ALL INLETS WITHIN A STREET SHALL BE DEPRESSED TWO INCHES BELOW THE GRADE OF THE GUTTER LINE.

STANDARD PRECAST PennDOT TYPE 'M' INLET

NO SCALE

C222
04/04/04

TYPICAL BEDDING & BACKFILLING POLYETHYLENE PIPE

NO SCALE

C200C
11/17/99

ANTI–SEEP COLLAR SCHEDULE				
OUTFALL LOCATION	OUTFALL PIPE DIA "D" (INCHES)	"L" (FT)	"H" (FT)	NUMBER PROVIDED
BASIN 1	15	4.83	4.83	2
WQ BASIN	15	4.41	4.41	2

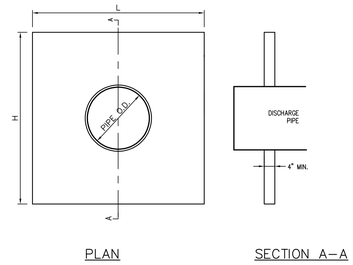

PLAN

SECTION A–A

ANTI–SEEP COLLAR

NO SCALE

C202C
1/31/05

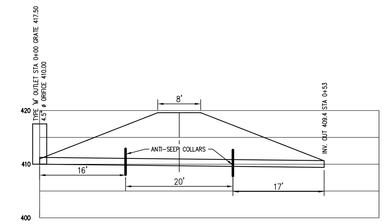

WQ BASIN

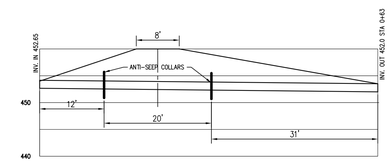

BASIN 1

ANTI–SEEP COLLAR LOCATIONS

NO SCALE

C202C
1/31/05

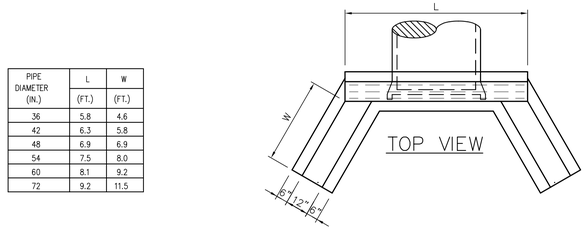

TOP VIEW

PIPE DIAMETER (IN.)	L (FT.)	W (FT.)
36	5.8	4.6
42	6.3	5.8
48	6.9	6.9
54	7.5	8.0
60	8.1	9.2
72	9.2	11.5

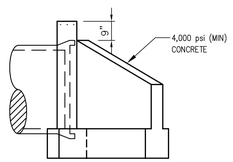

SIDE VIEW

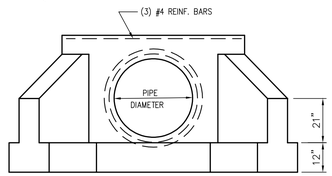

END VIEW

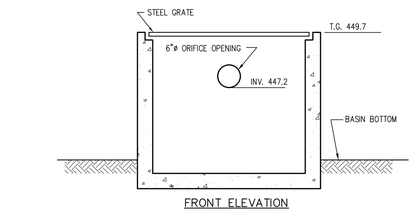

FRONT ELEVATION

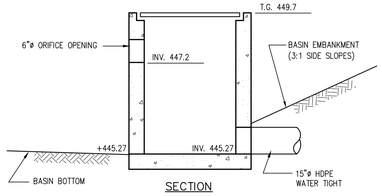

SECTION

NOTES:

1. OUTLET STRUCTURE CONSISTS OF A PADOT STANDARD INLET BOX WITH TYPE M TOP UNIT, AS MODIFIED ABOVE. CONSTRUCTION SHALL BE PER PADOT SPECIFICATION SECTION 408 AND STANDARD DRAWING RC-34.
2. SEE PLAN FOR SITE LOCATION.

BASIN 1 OUTLET CONTROL STRUCTURE

NO SCALE

C203
11/15/99

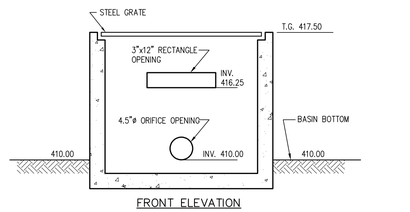

FRONT ELEVATION

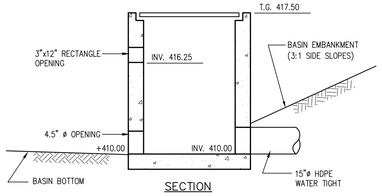

SECTION

NOTES:

1. OUTLET STRUCTURE CONSISTS OF A PADOT STANDARD INLET BOX WITH TYPE M TOP UNIT, AS MODIFIED ABOVE. CONSTRUCTION SHALL BE PER PADOT SPECIFICATION SECTION 408 AND STANDARD DRAWING RC-34.
2. SEE PLAN FOR SITE LOCATION.

WQ BASIN OUTLET CONTROL STRUCTURE

NO SCALE

C203
11/15/99

OUTLET	PIPE DIA PD (IN)	RIPRAP SIZE (R-_)	RIPRAP THICK RT (IN)	APRON LENGTH Al (FT)	APRON INITIAL WIDTH Aiw (FT)	APRON TERMINAL WIDTH Atw (FT)
A	18	R-3	9	8	4.5	7.70
B	15	R-3	9	6	3.75	6.15
C	15	R-3	9	6	3.75	6.15
D	36	R-5	27	28	9	29.00
F	48	R-6	36	28	12	40.00
G	18	R-3	9	8	4.5	12.50
H	18	R-4	18	8	4.5	12.50
I	12	R-3	9	10	3	13.00
J	12	R-3	9	6	3	9.00
K	15	R-4	18	16	3.75	19.75

NOTES:
1. GEOTEXTILE FABRIC SHALL BE PLACED UNDER RIP-RAP.
2. VIEW PLAN FOR OUTLET LOCATION(S).
3. USE NATIVE STONE WHENEVER POSSIBLE. ALL STONE SIZES MUST CONFORM TO THE RIP-RAP SPECIFICATIONS ON PAGE 31 OF THE DEP'S E&SPC PROGRAM MANUAL.

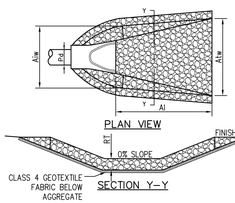

PLAN VIEW



SECTION Y–Y

RIP–RAP APRONS

NO SCALE

C219
11/15/99

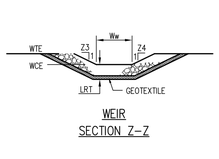

WEIR SECTION Z–Z

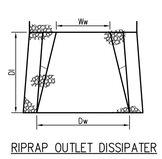

RIPRAP OUTLET DISSIPATER PLAN VIEW

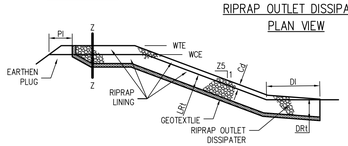

EMBANKMENT SECTION ALONG EMERGENCY SPILLWAY

BASIN	WEIR Z3 (FT)	WEIR Z4 (FT)	WEIR TOP ELEV. WTE (FT)	WEIR CREST ELEV. WCE (FT)	WEIR WIDTH Ww (FT)	LINING RIPRAP SIZE (R-_)	LINING RIPRAP THICK LRT (IN)	CHANNEL Z5 (FT)	CHANNEL DEPTH CD (FT)	DISSIPATER LENGTH DI (FT)	DISSIPATER WIDTH DW (FT)	DISSIPATER RIPRAP SIZE (R-_)	RIPRAP THICK LRT (IN)
1	2	2	452.0	450.0	30.0	4	12	NA	NA	NA	NA	NA	NA
WQ	3	3	419.60	418.25	104.0	*	*	NA	NA	NA	NA	NA	NA

DIMENSION PI SHOULD BE 5' MINIMUM

EMERGENCY SPILLWAY

NO SCALE

*LINE SPILLWAY WITH NORTH AMERICAN GREEN SC250 PERMANENT TRM

C212
9-8-97

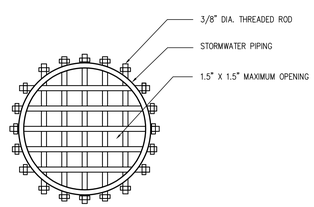

RODENT SCREEN

NO SCALE

XXX
XXX

STANDARD PADOT TYPE "D–W" ENDWALL

NO SCALE

NOTE:

INSTALL AS PER PADOT RC-31 CONSTRUCTION SPECIFICATIONS; PROVIDE 1" CHAMFER ON ALL EXPOSED EDGES.

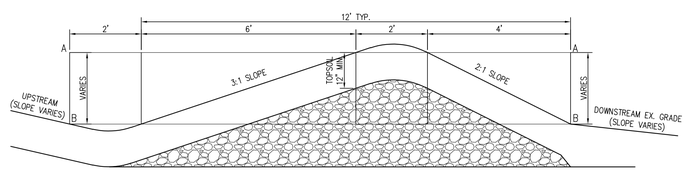

INFILTRATION BERM ELEVATIONS

BERM NUMBER	TOP ELEVATION A	BOTTOM ELEVATION B
INFILTRATION BERM 1	457.00	455.00
INFILTRATION BERM 2	455.25	453.00
INFILTRATION BERM 3	424.25	422.00
INFILTRATION BERM 4	422.50	420.00
INFILTRATION BERM 5	422.25	420.00

INFILTRATION BERMS – SECTION

SCALE: 1/2" = 1'–0"

architecture
engineering
landscape architecture
planning
surveying

melham ASSOCIATES, PC

2247 North Front Street
Harrisburg, PA 17110

tel 717 238 5000

fax 717 236 2600
www.melham.com

CLIENT

Estate of
Martha Joan Banzhoff
c/o Harry G. Banzhoff,
Executor

2308 STUMPSTOWN ROAD
MECHANICSBURG, PA 17055
(717) 691-5572

PROJECT

Banzhoff Tract

UPPER ALLEN TOWNSHIP, CUMBERLAND COUNTY, PA

PHASE

PRELIMINARY

DRAWING

POST CONSTRUCTION STORMWATER MANAGEMENT DETAILS

© 2021 MELHAM ASSOCIATES PC

SCALE

1" = 50'

JOB #

7680

CADD

7680C-5.dwg

DATE

7/27/21

SHEET

C-5.4

Jul 27, 2021 - Z:\Pr7600\7680\plandrft\Phase\dwg\7680C-5.dwg

PLANT LIST

SYMBOL	PLANT NAME	SIZE	ROOT	QUANTITY	COMMENTS
Ac *	Amelanchier canadensis Shadblow Serviceberry	36"	B&B	8	_
As *	Alnus serrulata Alder	36"	B&B	4	_
Cr *	Cornus racemosa Gray Dogwood	36"	B&B	5	_
Hv *	Hamamelis virginiana Witch Hazel	36"	B&B	6	_
Iv *	Ilex verticillata Winter Berry	24"	B&B	3	_
Lb *	Lindera benzoin Spicebush	24"	B&B	5	_
Mp *	Myrica pennsylvanica Northern Bayberry	No. 5	cont	3	_
Sp *	Symphoricarpus orbiculatus Coralberry	No. 5	cont	5	_

* PLANTS SUBSTITUTION WITH TOWNSHIP APPROVED EQUAL

PLANT LIST

UPLAND STABILIZATION AND WILDFLOWER SEED MIX*	
PLANT NAME	QUANTITY
Festuca arundinacea (Fawn)	30 lbs
Festuca ovina	25 lbs
Adropogon gerardii	5 lbs
Buchloe dactyloides	5 lbs
Elymus canadensis	5 lbs
Lotus corniculatus	5 lbs
Schizachyrium scoparius	5 lbs
Sorgastrum nutans	5 lbs
Trifolium pratense	5 lbs
Centaurea cyannis	2 lbs
Chrysanthemum leucanthemum	2 lbs
Coreopsis lanceolata	2 lbs
Echinacea purpurea	2 lbs
Rudbeckia hirta	2 lbs

* SEED MIXES PROVIDED BY AQUA-NICHE (717)957-3577. SUBSTITUTION WITH TOWNSHIP APPROVED EQUAL

GENERAL NOTES:

1. THE WETLAND SEED MIX IS DESIGNED FOR AREAS THAT HAVE ADEQUATE HYDROLOGY TO CREATE WETLAND CONDITIONS. AREAS THAT DO NOT RETAIN ADEQUATE SATURATED CONDITIONS MAY BE SEEDED WITH THE SLOPE MIX.
2. AS WITH ALL AREAS THAT EXPERIENCE INUNDATION AND SATURATION, IT IS DIFFICULT TO PREDICT HOW MUCH HYDROLOGY WILL OCCUR PRIOR TO CONSTRUCTION AND MONITORING OR THE SITE. ADJUSTMENTS TO THE COMPONENTS OF THE MIXES CAN BE MADE PRIOR TO INSTALLATION.
3. IF PERMANENT OR SEMI-PERMANENT INUNDATED CONDITIONS ARE PRESENT IT MAY BE NECESSARY TO SUPPLEMENT THE SEED MIX WITH PLANTINGS.

UPLAND STABILIZATION AND WILDFLOWER SEED MIX

1. MIXTURE SHALL BE APPLIED AT THE RATE OF 100 LBS PER ACRE AS PER ABOVE.
2. ADDITIONAL SPECIES THAT MAY BE ADDED FOR FASTER STABILIZATION OR FOR VERY STEEP SLOPES.
   ANNUAL RYE GRASS @ 50+ LBS PER ACRE
   RED TOP @ 20+ LBS PER ACRE

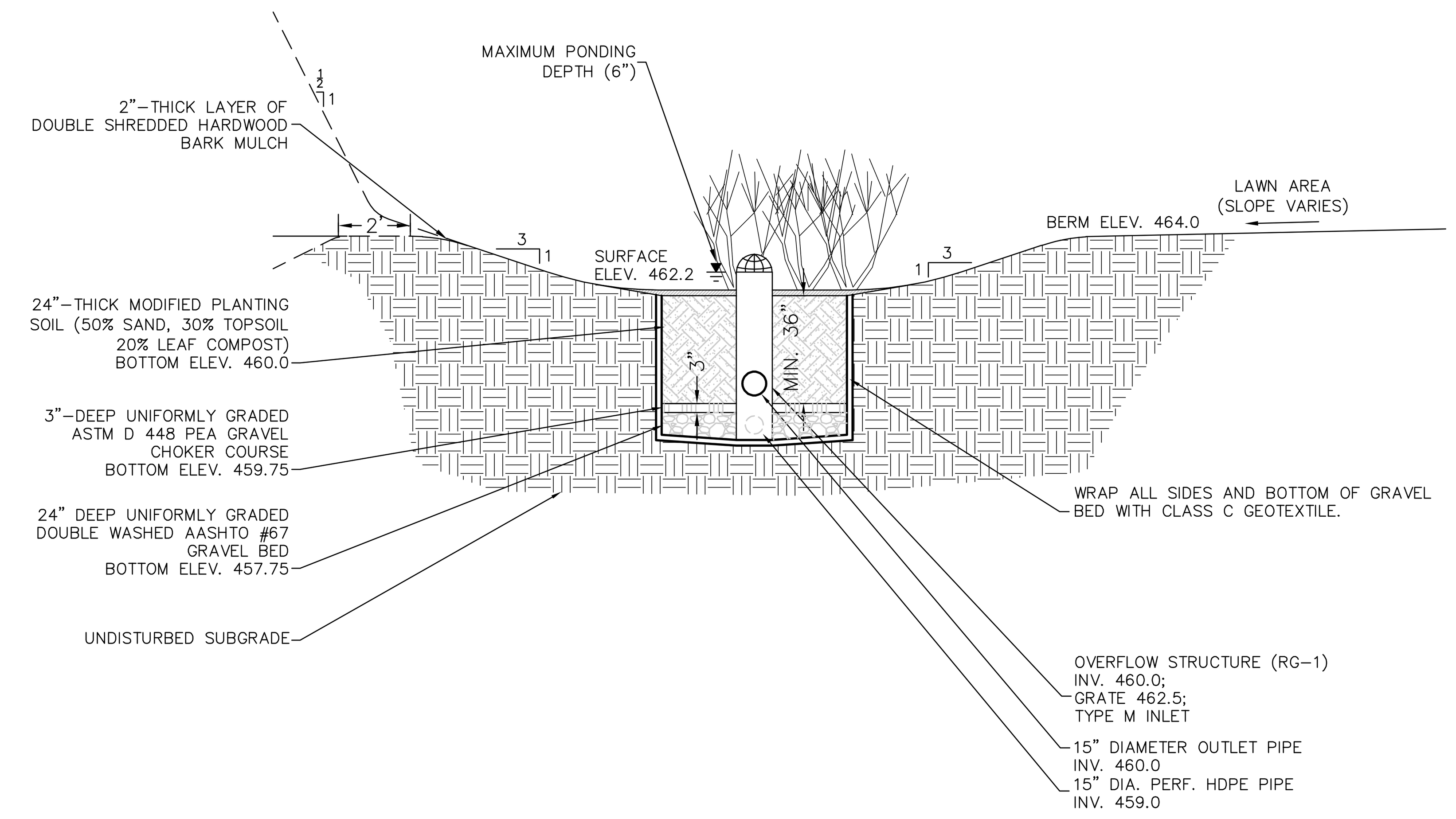

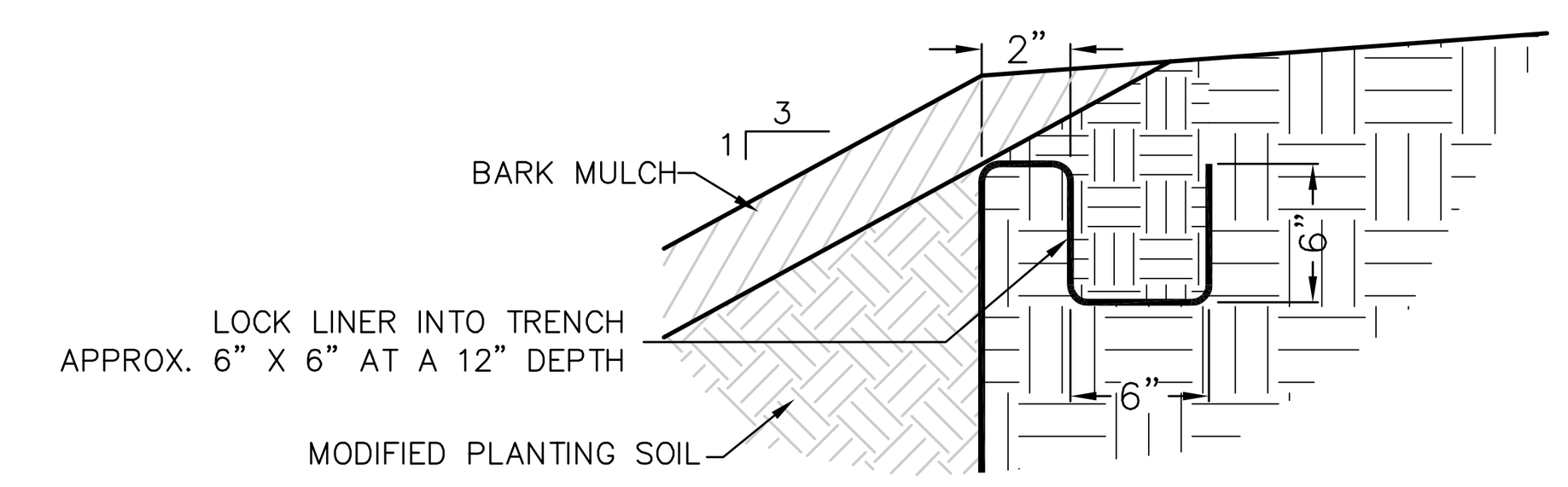

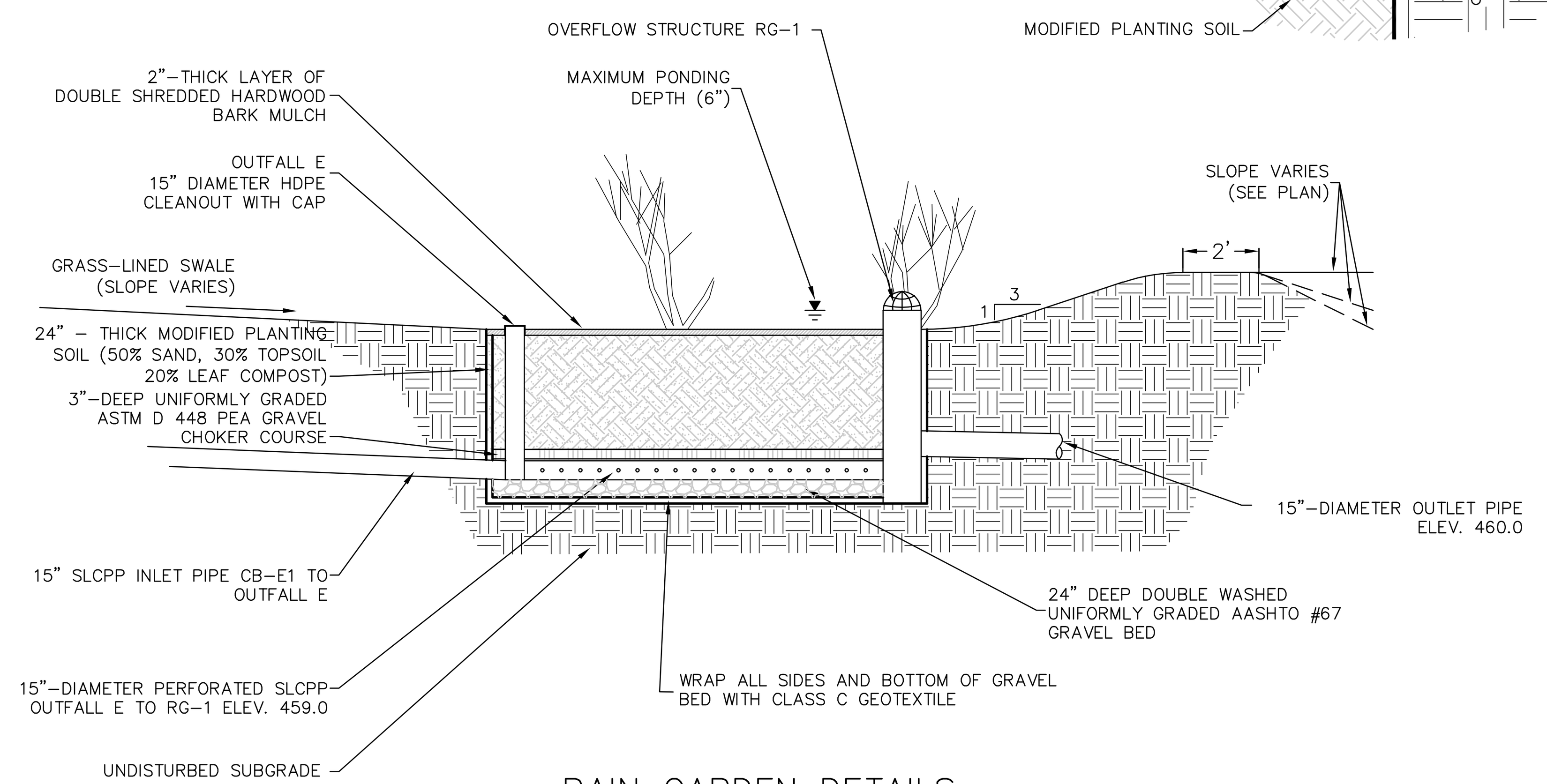

RAIN GARDEN DETAILS
NO SCALE

GENERAL NOTES

1. UPSTREAM AREAS THAT DIRECT STORM WATER TO ANY BASIN SHALL BE COMPLETELY STABILIZED BEFORE WATER FLOW IS DIRECTED TO A WATER QUALITY FILTER.
2. THE MODIFIED PLANTING SOIL MIX SHALL BE A UNIFORM MIX, FREE OF STONES, STUMPS, ROOTS OR OTHER SIMILAR OBJECTS LARGER THAN TWO INCHES (2").
3. THE MODIFIED PLANTING SOIL MIX SHALL BE FREE OF NOXIOUS WEEDS.
4. THE WATER QUALITY FILTER AREAS SHALL BE PROTECTED AT ALL TIMES. SURROUND WATER QUALITY AREA WITH 4' ORANGE CONSTRUCTION FENCING.
5. NO SITE DEBRIS, CONSTRUCTION MATERIALS OR CONSTRUCTION DEBRIS SHALL BE STORED OR DUMPED WITHIN THE FILTER AREA.
6. THE LANDSCAPE CONTRACTOR SHALL NOT PLANT SHURBS OR TREES AT THE FILTER INFLOW AREAS.
7. MULCH AROUND INDIVIDUAL PLANTS ONLY.
8. MULCH SHALL ONLY BE WELL-AGED (6 – 12 MONTHS) DOUBLE SHREDDED HARDWOOD BARK MULCH, FREE OF DELETERIOIUS MATERIALS SUCH AS TRASH, WOOD OR WOOD PRODUCTS, WEEDS, WEED SEEDS, SOIL OF ANY KIND, PLANTS, ROOTS, ETC.
9. SEE PLANTING SPECS FOR PLANT INSTALATION.
10. SEE EROSION AND SEDIMENTATION CONTROL DETAILS FOR SPECS ON INSTALLING SEEDED GRASSES AND LEGUMES.
11. A CLASS C GEOTEXTILE FABRIC SHALL BE USED FOR SEPARATION.
12. THE RAIN GARDEN SHALL BE PLANTED WITH ERNST FACW 122 WETLAND MEADOW MIX (ERNMX-122) OR EQUAL.

CONSTRUCTION NOTES

1. EXCAVATE SUBGRADE OF THE RAIN GARDEN AREA TO MEET THE INTENT OF THE DETAILS SHOWN
2. SUBGRADE SHALL BE FORMED AND SHAPED TO DEPTHS AND LINES SHOWN ON THE DETAILS CLEAN SUBGRADE OF ALL ROOTS, STICKS, DEBRIS AND STONES OVER ONE (1") INCH IN ANY DIMENSION. CONTRACTOR SHALL REMOVE/ELIMINATE ANY SHARP EDGES OR PROTRUSIONS IN EXCAVATION AREA WHICH MAY PUNCTURE MEMBRANE.
3. CIVIL ENGINEER OR GEOTECHNICAL ENGINEER SHALL INSPECT SUGRADE PRIOR TO PROCEEDING WITH FILTER INSTALLATION.
4. INSTALLATION OF MATERIALS IN RAIN GARDEN SHALL BE COMPLETED FROM THE PERIMETER OF THE BASIN. KEEP MATERIALS AND EQUIPMENT OFF LAYERS OF THE FILTER AREA.
5. PLACE REQUIRED LAYER OF STONE RESERVOIR PER NOTES AND DETAILS BELOW
6. ANY DIRT, DEBRIS OR SEDIMENT THAT ACCUMUALTES BETWEEN EACH LAYER SHALL BE REMOVED PRIOR TO INSTALLATION OF SUBSEQUENT LAYERS AT NO ADDITIONAL COST TO THE OWNER.
7. MANUFACTURED PLANTING SOIL SHALL BE THOROUGHLY MIXED ON SITE OR OFF SITE PRIOR TO BEING INSTALLED. IT SHALL NOT BE MIXED IN THE INSTALLATION AREA.
8. INSTALL MANUFACTURED PLANTING SOIL (50% TOPSOIL PER SPECIFICATIONS, 30% SAND, 20% LEAF COMPOST) IN MAXIMUM TWELVE (12") INCH LIFTS AND LIGHTLY COMPACT (TAMP WITH BACKHOE BUCKET OR BY HAND). INSTALL PLANTING SOIL TO GRADES INDICATED ON DRAWINGS.
9. PLANT RAIN GARDEN PER THE LANDSCAPE PLAN. MULCH WITH TWO (2") INCHES DOUBLE SHREDDED BARKMULCH.
10. PROTECT RAIN GARDEN FROM SEDIMENT AT ALL TIMES DURING CONSTRUCTION. SILT SOXX SHALL BE INSTALLED AND MAINTAINED BY THE CONTRACTOR WHERE WATER ENTERS THE FILTER AREA UNTIL ALL DISTURBED AREAS ARE STABILIZED.
11. WHEN THE UPSTREAM AREAS AND THE FILTER AREAS ARE FULLY STABILIZED, THE ENGINEER SHALL BE NOTIFIED AND REQUESTED TO INSPECT DRAINAGE AREA AND FILTER BASINS. WITH APPROVAL OF THE ENGINEER AND THE CONSERVATION DISTRICT, THE SEDIMENT CONTROL DEVICES MAY BE REMOVED AND THE FILTER AREA BE BROUGHT ONLINE.
12. MAINTAIN VEGETATION PER PLANTING SPECS IN PLANS.

RAIN GARDEN MAINTENANCE SCHEDULE

1. THE RAIN GARDEN SHALL BE INSPECTED TWICE PER YEAR, BETWEEN MARCH 15TH & APRIL 30TH AND AGAIN BETWEEN OCTOBER 1ST & NOVEMBER 30TH TO EVALUATE ITS HEALTH AND TO REMOVE AND REPLACE ANY DEAD, DISEASED OR UNSALVAGEABLE VEGETATION. PESTS AND DISEASES OF THE VEGETATION SHALL BE TREATED AS NECESSARY WITH LOW-TOXIC, PREVENTATIVE MEASURES. PROGRAM OF PREVENTION AND TREATMENT SHALL BE APPROVED BY THE OWNER OR HIS REPRESENTATIVE PRIOR TO IMPLEMENTATION OF THE PROGRAM.
2. DURING TIMES OF EXTENDED DROUGHT, LOOK FOR PHYSICAL FEATURES OF STRESS (UNREVIVED WILTING, YELLOW, SPOTTED OR BROWN LEAVES, LOSS OF LEAVES, ETC.). WATER IN THE EARLY MORNING AS NEEDED TO MAINTAIN ONE (1") INCH OF WATER WEEKLY. WEED REGULARLY, IF NEEDED. PRUNE EXCESS GROWTH AS REQUIRED TO MAINTAIN THE PLANTING (ANNUAL PRUNING IS A MINIMUM REQUIREMENT). FEATHER PRUNE ALL PLANTINGS; DO NOT USE HEDGE SHEARS. REMOVE PRUNING DEBRIS FROM SITE.
3. REMOVE ACCUMULATED SEDIMENT AND DEBRIS FROM THE BASIN ON A MONTHLY BASIS. THE RISER STRUCTURE SHOULD BE INSPECTED MONTHLY FOR THE FIRST YEAR AND QUARTERLY AFTERWARDS, AND AFTER EVERY STORM EVENT OF TWO (2) INCHES OR MORE. REMOVE ACCUMULATED DEBRIS FROM THE GRATE. REMOVE DEBRIS AS NECESSARY FROM THE INFLOW POINT.
4. THE SOILS AND ORGANIC MATERIAL SHALL BE TESTED ANNUALLY AND THE pH ADJUSTED PER THE TESTS TO MAINTAIN A pH REQUIRED FOR THE PLANTING.
5. AFTER EACH RAINSTORM, INSPECT SURFACE TO INSURE THAT DRAINAGE PATHS ARE CLEAR AND THAT PONDING WATER DISSIPATES OVER 4-6 HOURS. (WATER MAY POND FOR LONGER TIMES DURING THE WINTER AND EARLY SPRING.) THE RAIN GARDEN IS NOT A POND. IT SHOULD NOT PROVIDE A BREEDING GROUND FOR MOSQUITOES. IN THE EVENT THAT THE SYSTEM BECOMES COMPLETELY CLOGGED, COMPLETELY REPLACE THE SAND/PEAT MIXTURE TO THE EXTENT SHOWN ON PLANS.

Jul 27, 2021 Z:\Prj-7000\7680\Banzhoff\Pre\dwg\7680C-5.dwg

POST-CONSTRUCTION STORM WATER MANAGEMENT

OPERATION AND MAINTENANCE PROCEDURES:

RECOMMENDED TERMS OF MAINTENANCE

1. The on-site stormwater management facilities shall be constructed by the Developer / Owner, his successors and assigns, in accordance with the terms, conditions and specifications identified in this report and provided on the Post Construction Stormwater Management Plans.
2. The Developer / Owner, his successors and assigns, shall maintain the stormwater management facilities in good working conditions, acceptable to the Municipality, to ensure such facilities are performing their design function.
3. The Developer / Owner, his successors and assigns, hereby grants permission to the Municipality, his authorized agents and employees, upon presentation of proper identification, to enter upon the property at reasonable times, and to inspect the stormwater management facilities when deemed necessary. When such inspections are performed the Municipality shall provide copies of the inspection report with findings and evaluations to the Developer / Owner, his successors, and assigns.
4. The Developer / Owner, his successors and assigns, shall conduct maintenance inspections bi-annually during the period when construction or earth disturbance activities are being conducted and thence once a year thereafter, except that upon the cessation of a 2 year storm (2.5 inches of rainfall) or greater inspections will be conducted on all stormwater management infrastructure and facilities. All cost for said inspection shall be paid for by the Developer / Owner, his successors and assigns.
5. The Developer / Owner, his successors and assigns, shall convey to the municipality easements and or rights-of-way to ensure access to all stormwater management facilities for periodic inspection and emergency maintenance.
6. The Developer / Owner, his successors and assigns, shall perform maintenance in accordance with the approved stormwater management plans.
7. In the event that the Developer / Owner, his successors and assigns, fail to maintain the stormwater management facilities in adequate working condition acceptable to the Municipality, then the Municipality may enter on to the property to take any and all necessary actions to correct the problem. The Municipality will be reimbursed by the Developer / Owner, his successors and assigns, for all cost involved conducting the necessary corrective actions in such a manner allowed by PA law.
8. In the event of an emergency, the Municipality may enter the property without prior notification to inspect and if needed perform necessary corrective actions, when the health, safety or welfare of the citizen's is at jeopardy. In all other Municipal site inspections the Developer / Owner shall be notified in writing 5 days in advance of such planned visit.

MAINTENANCE PROCEDURES

1. Record Keeping:

All inspections should be completed on report forms provided by a qualified agent of the Owner and reports shall be properly dated and saved for a period of 5 years.

2. Inspection Interval:

The facilities shall be inspected every 3 months for the first year after completion of construction and every 6 months (semi-annually) thereafter, or after each 1.0 inch rainfall unless other wise noted in the following recommended maintenance requirements for each BMP.

3. Maintenance Activities and Frequency:

a) Bio-Retention Systems

- Water plants as necessary.
  Frequency: First Year and during extended periods of dry conditions
- After the first 6 months after construction and thence semi-annually thereafter, or after each 1.0-inch rainfall event the Bio-Retention System facility and related structures should be inspected for signs of failure and needed repairs.
  Frequency: Semi-annually or after each 1.0 inch rain event
- Remove Litter and debris.
  Frequency: Monthly
- Re-mulch and treat diseased trees and shrubs.
  Frequency: As Needed.

b) Infiltration Berms

- After the first 6 months after construction and thence semi-annually thereafter, or after each 1.0 inch rainfall event the infiltration berms and related structures should be inspected for signs of failure and needed repairs.
  Frequency: Semi-annually or after each 1.0 inch rain event
- If the infiltration berm shows signs of clogging after 72 hours from the last rainfall event, then appropriate sections of the infiltration area shall be excavated and repaired to the original design specifications as shown on the approved plans.
  Frequency: As Needed
- Most of the maintenance conducted on a semi-annual basis when failure of infiltration is not present should be concentrated on the removal of all debris at all pretreatment practices, such as curb inlets, field inlet sumps, rock filter strips and grass / rock swales.
  Frequency: Semi-annual
- All inspections should be completed on report forms by a qualified agent of the Owner and reports shall be dated and saved for a period of 20 years.
  Frequency: Semi-annual
- All trees, brush, and noxious weeds growing within the infiltration berm should be removed upon sighting.
  Frequency: As needed
- Clogging of the trench occurs most frequently on the surface. Grass clippings, leaves, and accumulated sediment shall be removed routinely from the berm surface.
  Frequency: Semi-annual

c) Detention Basin

- All basin structures expected to receive and/or trap debris and sediment should be inspected for clogging and excessive debris and sediment accumulation at least four (4) times per year, as well as after every storm greater than 1 inch.
  - o Structures include basin bottoms, trash racks, outlet structures, riprap or gabion structures, and inlets.
- Sediment removal should be conducted when the basin is completely dry. Sediment should be disposed of properly and once sediment is removed, disturbed areas need to be immediately stabilized and revegetated.
- Mowing and/or trimming of vegetation should be preformed as necessary to sustain the system, but all detritus should be removed from the basin.
  - o Vegetated areas should be inspected annually for erosion.
  - o Vegetated areas should be inspected annually for unwanted growth of exotic/invasive species.
  - o Vegetative cover should be maintained of 95 percent. If vegetative cover has bee reduced by 10 percent, vegetation should be reestablished.
- Grass on the stormwater basin emergency spillway shall be mowed on a regular basis to prevent brush and tree growth and to provide adequate channel flow.

Upon finding any component of the drainage structures not functioning as intended, that portion of the structure shall be immediately cleaned, repaired or replaced.

architecture
engineering
landscape architecture
planning
surveying

MELHAM ASSOCIATES, PC

2247 North Front Street
Harrisburg, PA 17110

tel 717 238 5000

fax 717 236 2600
www.melham.com

[redacted]

CLIENT

Estate of
Martha Joan Banzhoff
c/o Harry G. Banzhoff,
Executor

2308 STUMPSTOWN ROAD
MECHANICSBURG, PA 17055
(717) 691-5572

PROJECT

Banzhoff Tract

UPPER ALLEN TOWNSHIP, CUMBERLAND COUNTY, PA

PHASE

PRELIMINARY

DRAWING

POST CONSTRUCTION STORMWATER MANAGEMENT DETAILS

© 2021 MELHAM ASSOCIATES PC

SCALE

AS SHOWN

[redacted]

JOB #

7680

CADD

7680C-5.dwg

DATE

7/27/21

SHEET

C-5.5

CONFIGURATION DETAIL

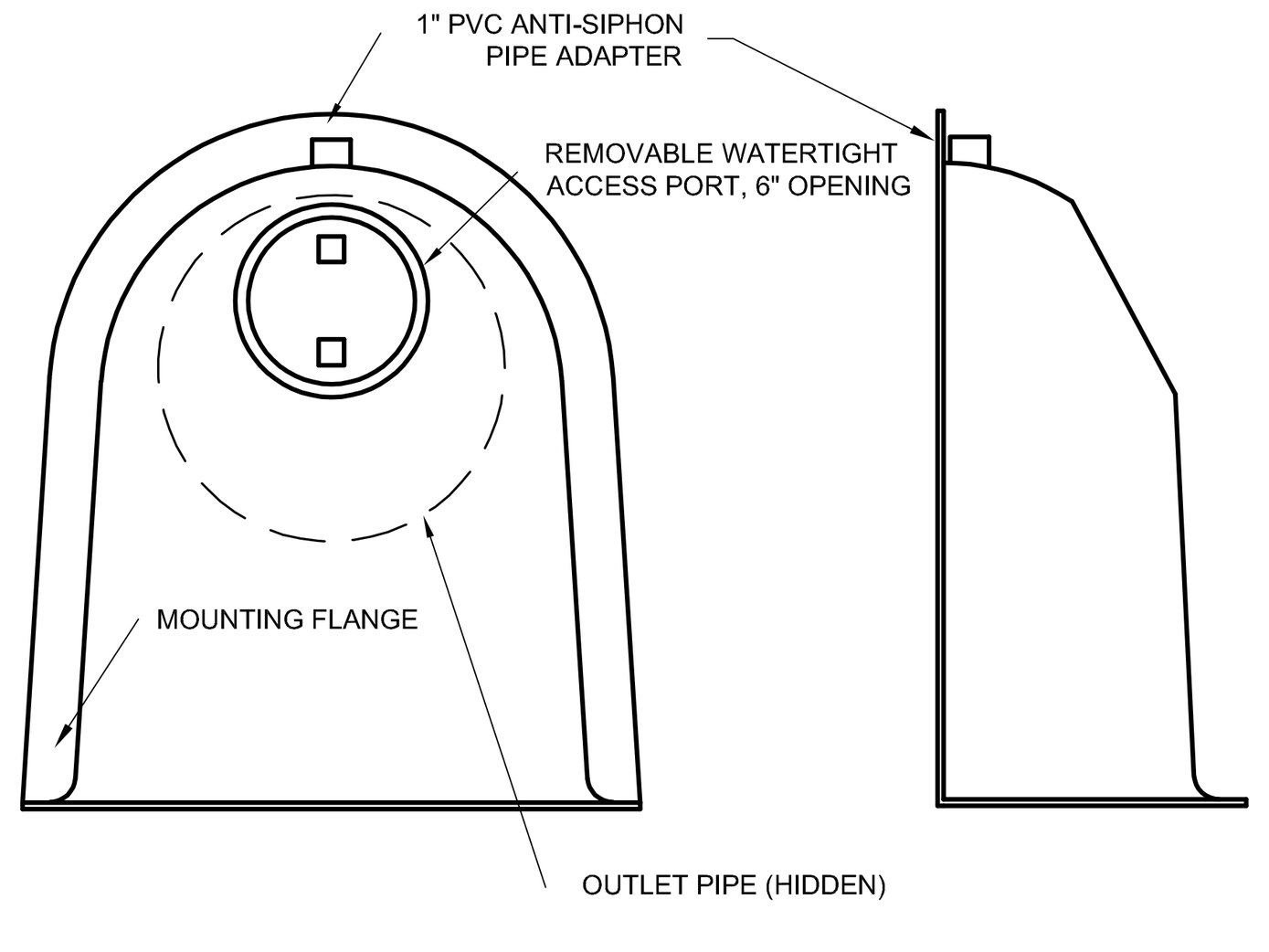

SNOUT OIL-WATER-DEBRIS SEPARATOR

TYPICAL INSTALLATION

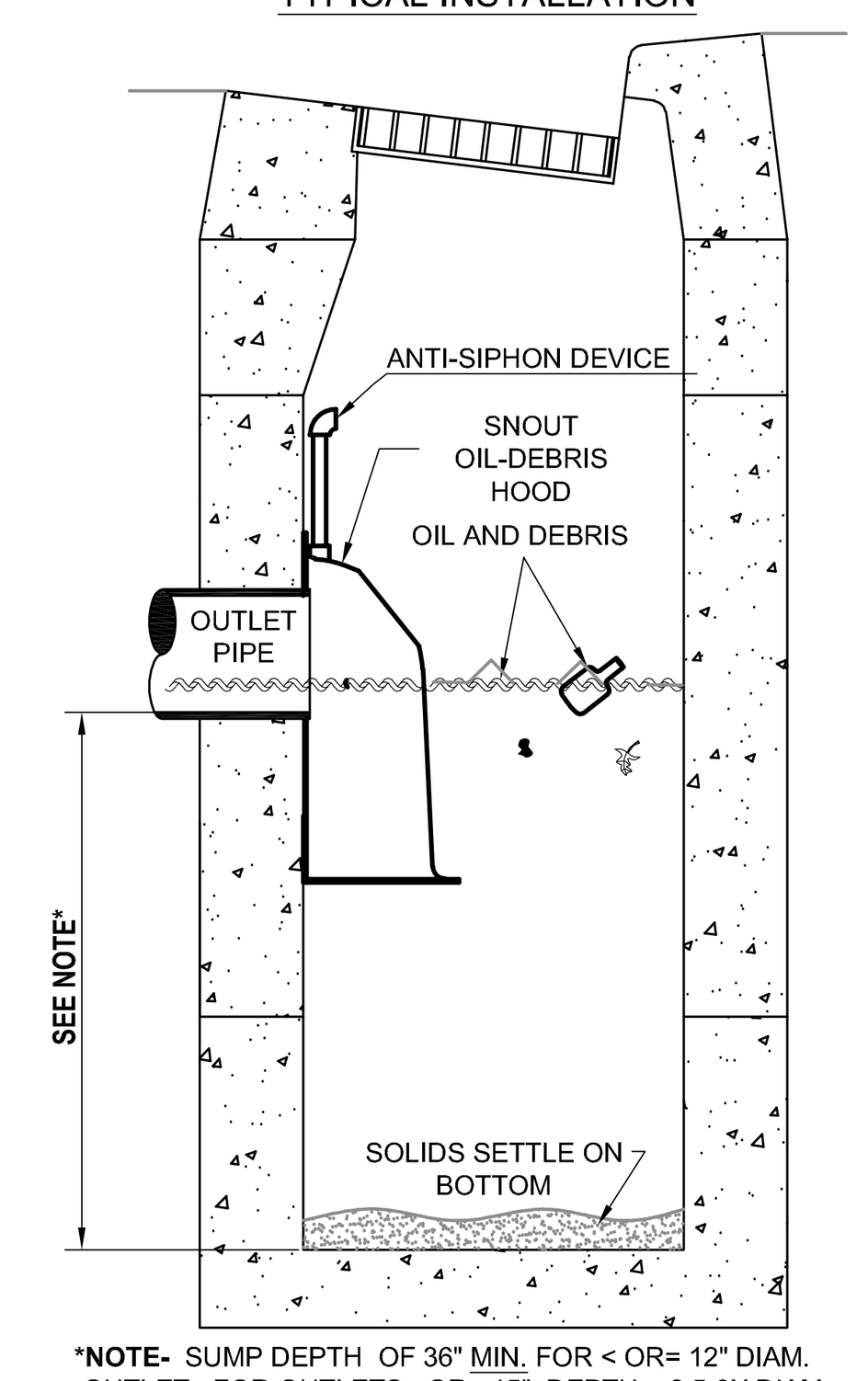

***NOTE-** SUMP DEPTH OF 36" MIN. FOR < OR= 12" DIAM. OUTLET. FOR OUTLETS >OR= 15", DEPTH = 2.5-3X DIAM.

NOTES:

1. ALL HOODS AND TRAPS FOR CATCH BASINS AND WATER QUALITY STRUCTURES SHALL BE AS MANUFACTURED BY:
   BEST MANAGEMENT PRODUCTS, INC.
   53 MT. ARCHER RD.
   LYME, CT 06371
   (860) 434-0277, (860) 434-3195 FAX
   TOLL FREE: (800) 504-8008 OR (888) 354-7585
   WEB SITE: www.bmpinc.com
   OR PRE-APPROVED EQUAL
2. ALL HOODS SHALL BE CONSTRUCTED OF A GLASS REINFORCED RESIN COMPOSITE WITH ISO GEL COAT EXTERIOR FINISH WITH A MINIMUM 0.125" LAMINATE THICKNESS.
3. ALL HOODS SHALL BE EQUIPPED WITH A WATERTIGHT ACCESS PORT, A MOUNTING FLANGE, AND AN ANTI-SIPHON VENT AS DRAWN. (SEE CONFIGURATION DETAIL)
4. THE SIZE AND POSITION OF THE HOOD SHALL BE DETERMINED BY OUTLET PIPE SIZE AS PER MANUFACTURER'S RECOMMENDATION.
5. THE BOTTOM OF THE HOOD SHALL EXTEND DOWNWARD A DISTANCE EQUAL TO 1/2 THE OUTLET PIPE DIAMETER WITH A MINIMUM DISTANCE OF 6" FOR PIPES <12" I.D.
6. THE ANTI-SIPHON VENT SHALL EXTEND ABOVE HOOD BY MINIMUM OF 3" AND A MAXIMUM OF 24" ACCORDING TO STRUCTURE CONFIGURATION.
7. THE SURFACE OF THE STRUCTURE WHERE THE HOOD IS MOUNTED SHALL BE FINISHED SMOOTH AND FREE OF LOOSE MATERIAL.
8. THE HOOD SHALL BE SECURELY ATTACHED TO STRUCTURE WALL WITH 3/8' STAINLESS STEEL BOLTS AND OIL-RESISTANT GASKET AS SUPPLIED BY MANUFACTURER. (SEE INSTALLATION DETAIL)
9. INSTALLATION INSTRUCTIONS SHALL BE FURNISHED WITH MANUFACTURER SUPPLIED INSTALLATION KIT.
   INSTALLATION KIT SHALL INCLUDE:
   A. INSTALLATION INSTRUCTIONS
   B. PVC ANTI-SIPHON VENT PIPE AND ADAPTER
   C. OIL-RESISTANT CRUSHED CELL FOAM GASKET WITH PSA BACKING
   D. 3/8" STAINLESS STEEL BOLTS
   E. ANCHOR SHIELDS

US Patent # 6126817

INSTALLATION DETAIL

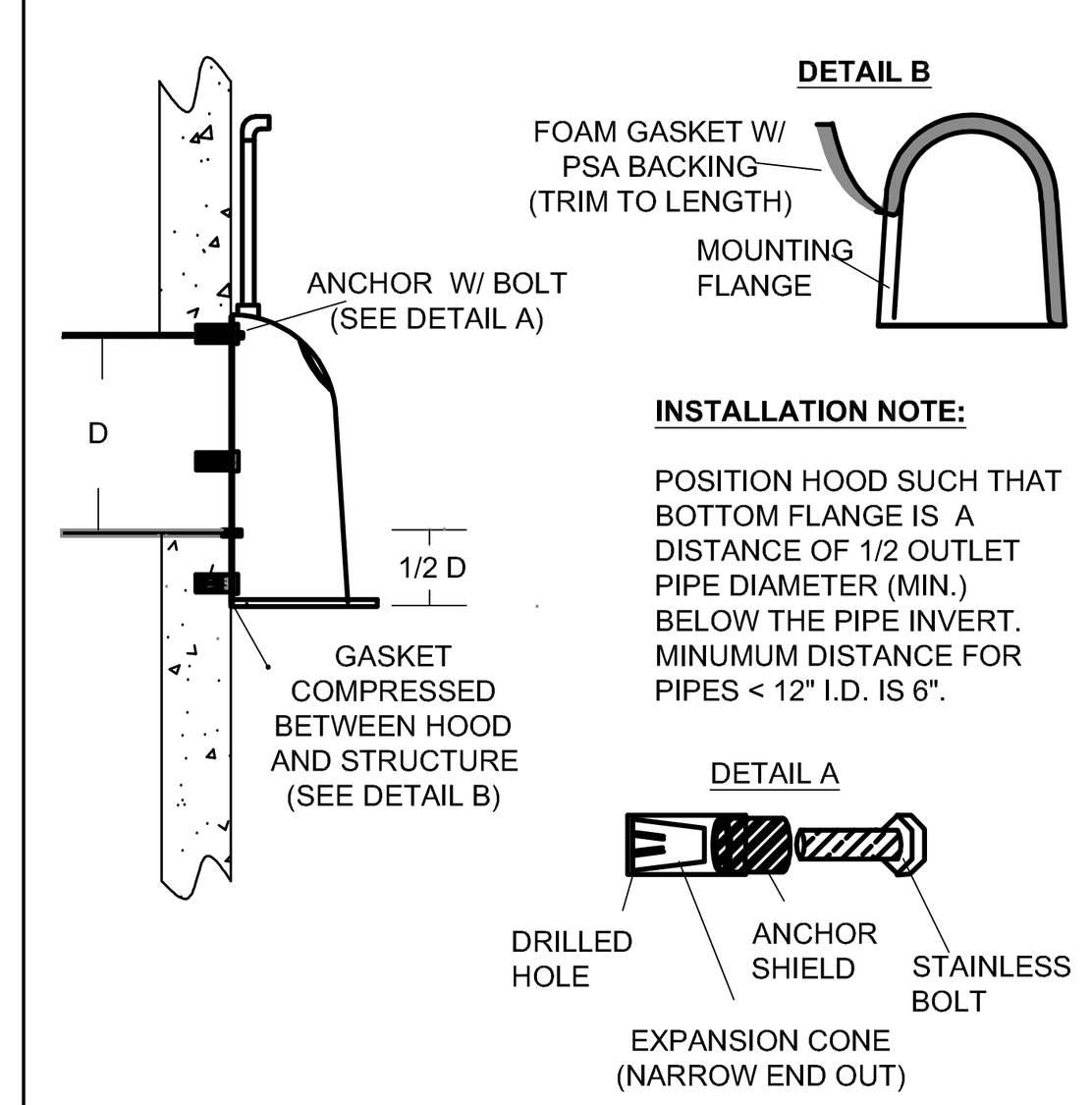

INSTALLATION NOTE:

POSITION HOOD SUCH THAT BOTTOM FLANGE IS A DISTANCE OF 1/2 OUTLET PIPE DIAMETER (MIN.) BELOW THE PIPE INVERT. MINUMUM DISTANCE FOR PIPES < 12" I.D. IS 6".

HOOD SPECIFICATION FOR CATCH BASINS AND WATER QUALITY STRUCTURES

DESCRIPTION	DATE	SCALE
OIL- DEBRIS HOOD SPECIFICATION AND INSTALLATION (TYPICAL)	09/08/00	NONE
	DRAWING NUMBER SP-SN	

SSMH–10 SNOUT

USE 24R SNOUT
MAX INSIDE PIPE ø = 18"
SUMP DEPTH = 48"

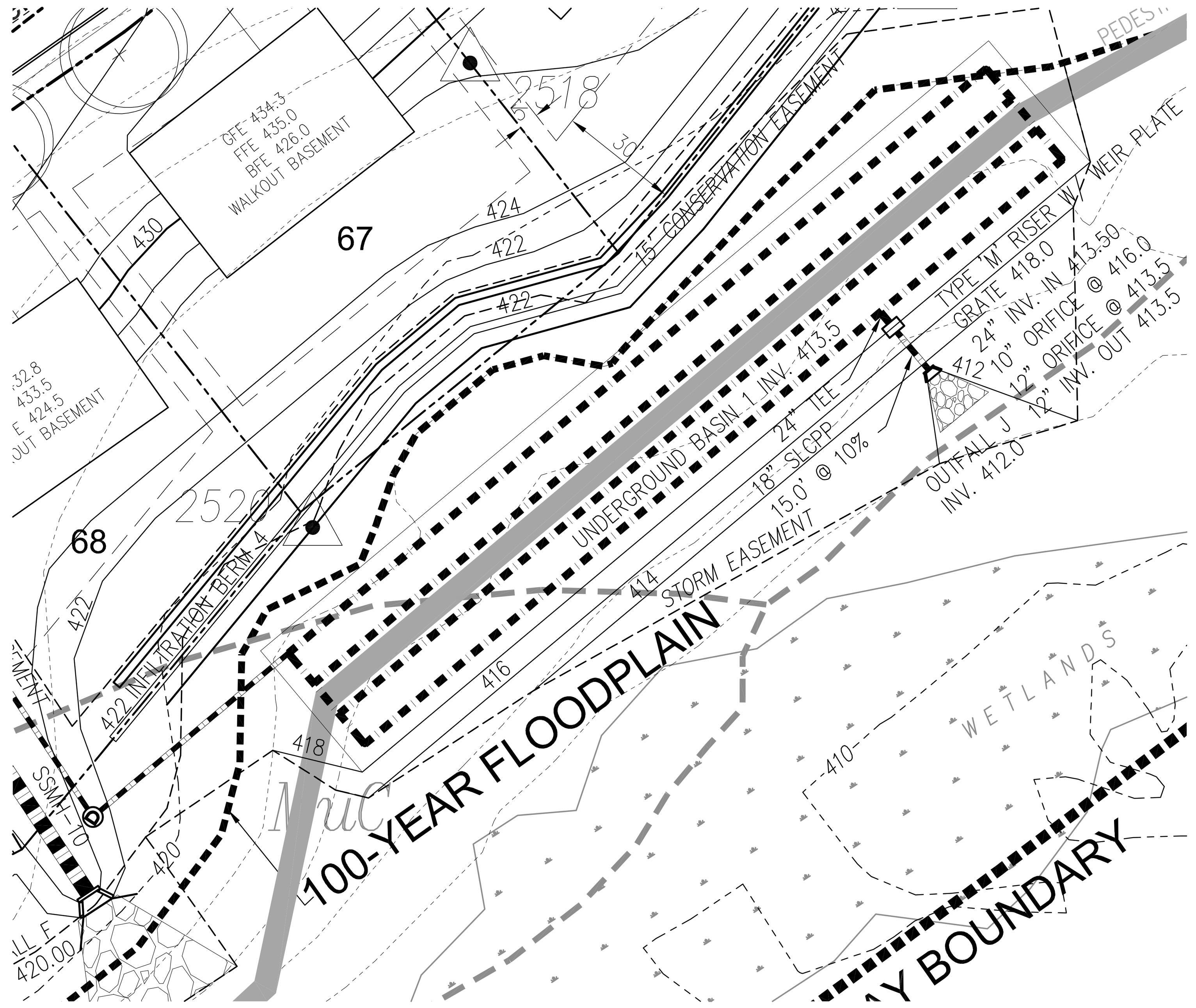

UNDERGROUND BASIN 1
SCALE: 1" = 30'

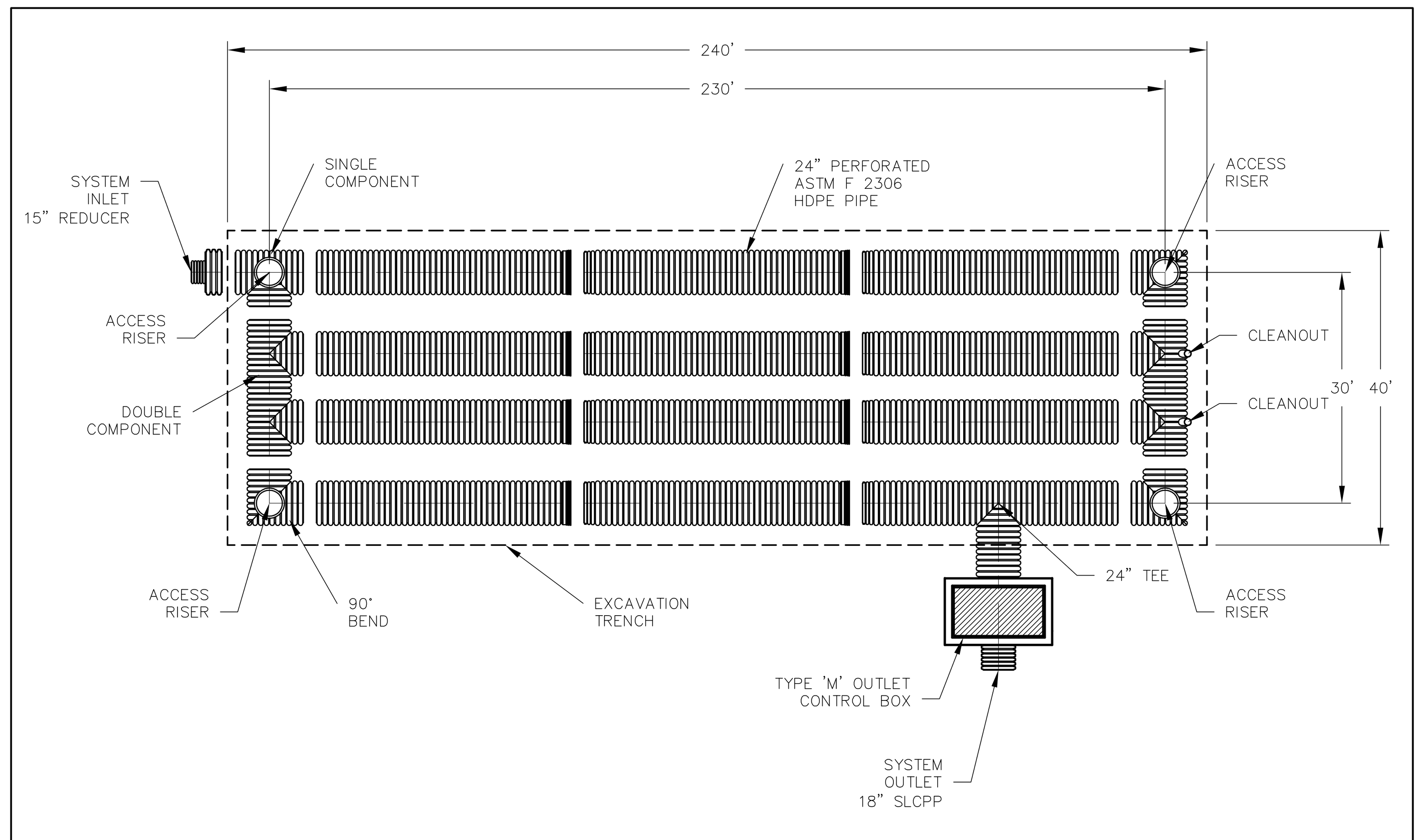

NOTES:

1. FOR INSTALLATION RECOMMENDATIONS, SEE STD–702 "TYPICAL RET/DET CROSS–SECTION DETAIL" AND STD–703 "TYPICAL RET/DET/CLEANOUT DETAIL"

©2007 ADS, INC.

REV.	DESCRIPTION	BY	MM/DD/YY	CHK'D
1	ADDED ASTM F 2306 LEADER	TJR	08/20/07	

NOTE: ALL DIMENSIONS ARE ± 1/2 FOOT.

ADVANCED DRAINAGE SYSTEMS, INC. ("ADS") HAS PREPARED THIS DETAIL BASED ON INFORMATION PROVIDED TO ADS. THIS DRAWING IS INTENDED TO DEPICT THE COMPONENTS AS REQUESTED. ADS HAS NOT PERFORMED ANY ENGINEERING OR DESIGN SERVICES FOR THIS PROJECT, NOR HAS ADS INDEPENDENTLY VERIFIED THE INFORMATION SUPPLIED. THE INSTALLATION DETAILS PROVIDED HEREIN ARE GENERAL RECOMMENDATIONS AND ARE NOT SPECIFIC FOR THIS PROJECT. THE DESIGN ENGINEER SHALL REVIEW THESE DETAILS PRIOR TO CONSTRUCTION. IT IS THE DESIGN ENGINEERS RESPONSIBILITY TO ENSURE THE DETAILS PROVIDED HEREIN MEETS OR EXCEEDS THE APPLICABLE NATIONAL, STATE, OR LOCAL REQUIREMENTS AND TO ENSURE THAT THE DETAILS PROVIDED HEREIN ARE ACCEPTABLE FOR THIS PROJECT.

DIA. DET/RET SYSTEM
TYPICAL SUBSURFACE DET.\RET. SYSTEM LAYOUT DETAIL
DRAWING NUMBER: STD–701
ADS 4640 TRUEMAN BLVD HILLIARD, OHIO 43026
ADVANCED DRAINAGE SYSTEMS, INC.
DRAWN BY: TJR
DATE: 03/14/07
SCALE: NTS
SHEET OF

SYSTEM F UNDERGROUND BASIN 1
NOT TO SCALE

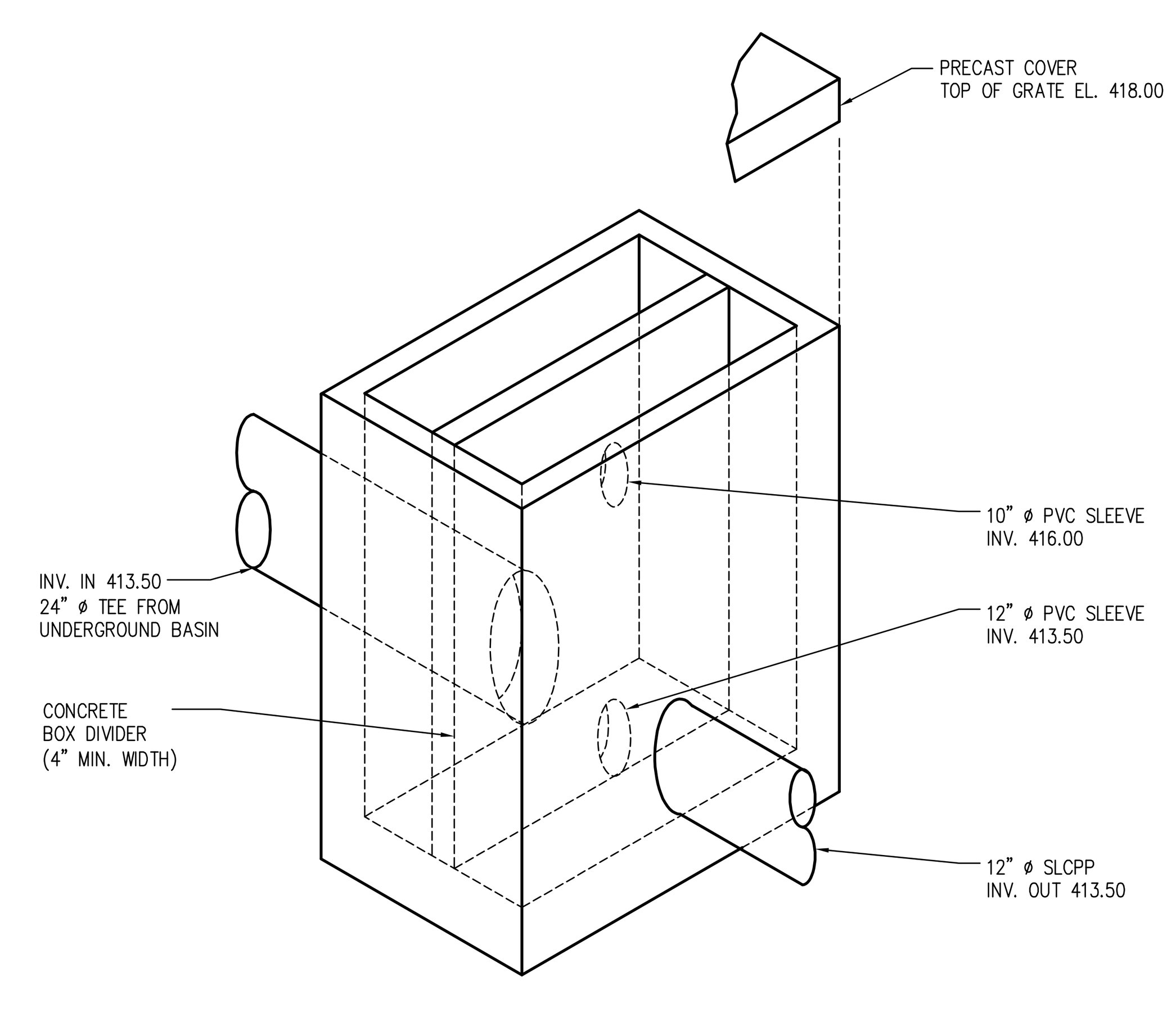

TYPE 'M' INLET WITH CONCRETE BOX DIVIDER DETAIL
UNDERGROUND BASIN 1 OUTLET STRUCTURE
NO SCALE

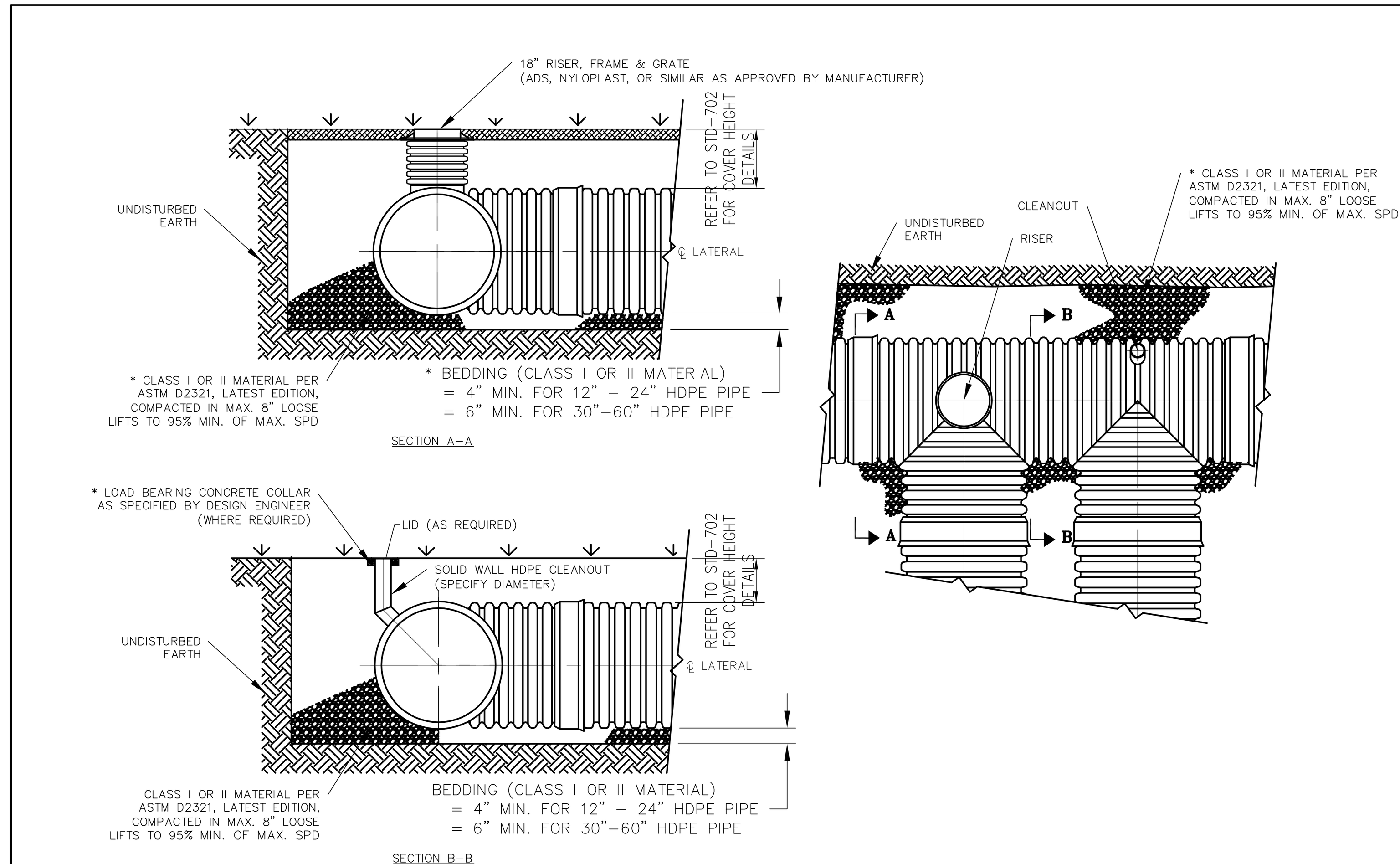

* CLASS I BACKFILL REQUIRED AROUND 60" DIAMETER FITTINGS

* LOAD BEARING CONCRETE COLLAR SHALL BE CONSTRUCTED IN TRAFFIC AREAS SUCH THAT THE LIVE LOAD IS TRANSMITTED TO THE SURROUNDING SOIL AND NOT DIRECTLY TO THE RISER.

©2007 ADS, INC.

REV.	DESCRIPTION	BY	MM/DD/YY	CHK'D
2	ADDED 60" FITTINGS NOTE	TJR	07/25/08	CKS

NOTE: ALL DIMENSIONS ARE ± 1/2 FOOT.

ADVANCED DRAINAGE SYSTEMS, INC. ("ADS") HAS PREPARED THIS DETAIL BASED ON INFORMATION PROVIDED TO ADS. THIS DRAWING IS INTENDED TO DEPICT THE COMPONENTS AS REQUESTED. ADS HAS NOT PERFORMED ANY ENGINEERING OR DESIGN SERVICES FOR THIS PROJECT, NOR HAS ADS INDEPENDENTLY VERIFIED THE INFORMATION SUPPLIED. THE INSTALLATION DETAILS PROVIDED HEREIN ARE GENERAL RECOMMENDATIONS AND ARE NOT SPECIFIC FOR THIS PROJECT. THE DESIGN ENGINEER SHALL REVIEW THESE DETAILS PRIOR TO CONSTRUCTION. IT IS THE DESIGN ENGINEERS RESPONSIBILITY TO ENSURE THE DETAILS PROVIDED HEREIN MEETS OR EXCEEDS THE APPLICABLE NATIONAL, STATE, OR LOCAL REQUIREMENTS AND TO ENSURE THAT THE DETAILS PROVIDED HEREIN ARE ACCEPTABLE FOR THIS PROJECT.

DIA. DET/RET SYSTEM
TYPICAL RET/DET RISER/CLEAN-OUT DETAIL
DRAWING NUMBER: STD–703
ADS 4640 TRUEMAN BLVD HILLIARD, OHIO 43026
ADVANCED DRAINAGE SYSTEMS, INC.
DRAWN BY: CRM
DATE: 10/23/06
SCALE: NTS
SHEET OF

SYSTEM F UNDERGROUND BASIN 1
NOT TO SCALE

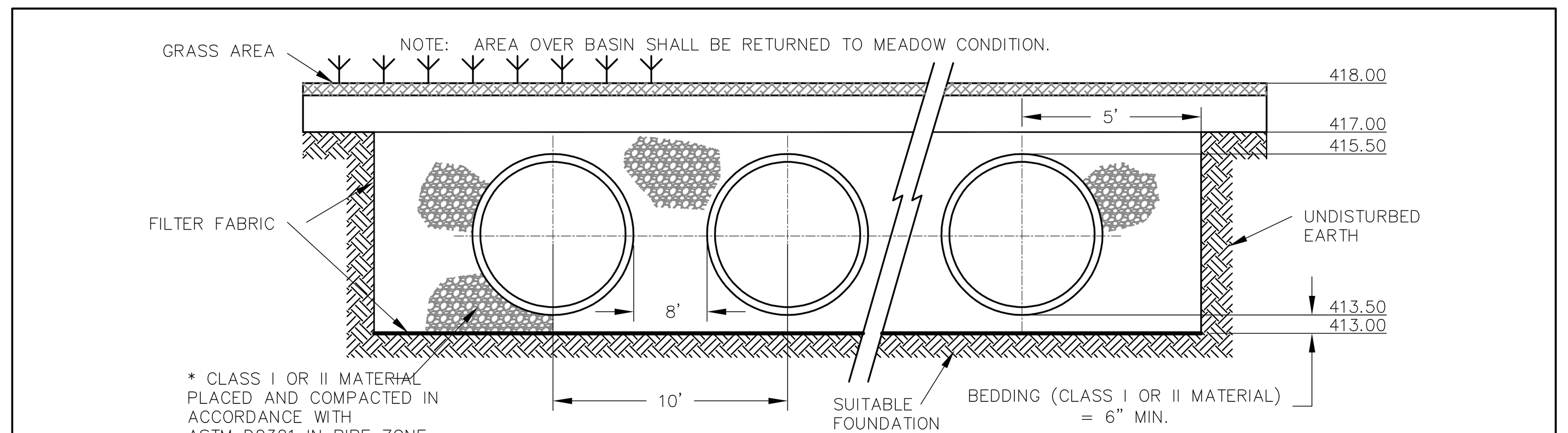

NOTES:

1. ALL REFERENCES TO CLASS I OR II MATERIAL ARE PER ASTM D2321 "STANDARD PRACTICE FOR UNDERGROUND INSTALLATION OF THERMOPLASTIC PIPE FOR SEWERS AND OTHER GRAVITY FLOW APPLICATIONS", LATEST EDITION.
2. ALL RETENTION AND DETENTION SYSTEMS SHALL BE INSTALLED IN ACCORDANCE WITH ASTM D2321, LATEST EDITION AND THE MANUFACTURER'S PUBLISHED INSTALLATION GUIDELINES.
3. MEASURES SHOULD BE TAKEN TO PREVENT THE MIGRATION OF NATIVE FINES INTO THE BACKFILL MATERIAL, WHEN REQUIRED. SEE ASTM D2321.
4. FILTER FABRIC: A GEOTEXTILE FABRIC MAY BE USED AS SPECIFIED BY THE ENGINEER TO PREVENT THE MIGRATION OF FINES FROM THE NATIVE SOIL INTO THE SELECT BACKFILL MATERIAL.
5. FOUNDATION: WHERE THE TRENCH BOTTOM IS UNSTABLE, THE CONTRACTOR SHALL EXCAVATE TO A DEPTH REQUIRED BY THE ENGINEER AND REPLACE WITH SUITABLE MATERIAL AS SPECIFIED BY THE ENGINEER. AS AN ALTERNATIVE AND AT THE DISCRETION OF THE DESIGN ENGINEER, THE TRENCH BOTTOM MAY BE STABILIZED USING A GEOTEXTILE MATERIAL.
6. BEDDING: SUITABLE MATERIAL SHALL BE CLASS I OR II. THE CONTRACTOR SHALL PROVIDE DOCUMENTATION FOR MATERIAL SPECIFICATION TO ENGINEER. UNLESS OTHERWISE NOTED BY THE ENGINEER, MINIMUM BEDDING THICKNESS SHALL BE 4" (100mm) FOR 4"–24" (100mm–600mm); 6" (150mm) FOR 30"–60" (750mm–900mm).
7. INITIAL BACKFILL: SUITABLE MATERIAL SHALL BE CLASS I OR II IN THE PIPE ZONE EXTENDING NOT LESS THAN 6" ABOVE CROWN OF PIPE. THE CONTRACTOR SHALL PROVIDE DOCUMENTATION FOR MATERIAL SPECIFICATION TO ENGINEER. MATERIAL SHALL BE INSTALLED AS REQUIRED IN ASTM D2321, LATEST EDITION.
8. MINIMUM COVER: MINIMUM COVER OVER ALL RETNETION/DETENTION SYSTEMS IN NON–TRAFFIC APPLICATIONS (GRASS OR LANDSCAPE AREAS) IS 12" FROM TOP OF PIPE TO GROUND SURFACE. ADDITIONAL COVER MAY BE REQUIRED TO PREVENT FLOATATION. FOR TRAFFIC APPLICATIONS, MINIMUM COVER IS 12" UP TO 36" DIAMETER PIPE AND 24" OF COVER FOR 42" – 60" DIAMETER PIPE, MEASURED FROM TOP OF PIPE TO BOTTOM OF FLEXIBLE PAVEMENT OR TO TOP OF RIGID PAVEMENT.

©2007 ADS, INC.

REV.	DESCRIPTION	BY	MM/DD/YY	CHK'D
3	REVISED 18" SPACING	TJR	01/05/09	CKS

NOTE: ALL DIMENSIONS ARE ± 1/2 FOOT.

ADVANCED DRAINAGE SYSTEMS, INC. ("ADS") HAS PREPARED THIS DETAIL BASED ON INFORMATION PROVIDED TO ADS. THIS DRAWING IS INTENDED TO DEPICT THE COMPONENTS AS REQUESTED. ADS HAS NOT PERFORMED ANY ENGINEERING OR DESIGN SERVICES FOR THIS PROJECT, NOR HAS ADS INDEPENDENTLY VERIFIED THE INFORMATION SUPPLIED. THE INSTALLATION DETAILS PROVIDED HEREIN ARE GENERAL RECOMMENDATIONS AND ARE NOT SPECIFIC FOR THIS PROJECT. THE DESIGN ENGINEER SHALL REVIEW THESE DETAILS PRIOR TO CONSTRUCTION. IT IS THE DESIGN ENGINEERS RESPONSIBILITY TO ENSURE THE DETAILS PROVIDED HEREIN MEETS OR EXCEEDS THE APPLICABLE NATIONAL, STATE, OR LOCAL REQUIREMENTS AND TO ENSURE THAT THE DETAILS PROVIDED HEREIN ARE ACCEPTABLE FOR THIS PROJECT.

DIA. DET/RET SYSTEM
TYPICAL RET/DET CROSS SECTION DETAIL
DRAWING NUMBER: STD–702
ADS 4640 TRUEMAN BLVD HILLIARD, OHIO 43026
ADVANCED DRAINAGE SYSTEMS, INC.
DRAWN BY: AWM
DATE: 07.25.06
SCALE: NTS
SHEET OF

SYSTEM F UNDERGROUND BASIN 1
NOT TO SCALE

architecture
engineering
landscape architecture
planning
surveying

melham ASSOCIATES, PC

2247 North Front Street
Harrisburg, PA 17110

tel 717 238 5000

fax 717 236 2600

www.melham.com

CLIENT

Estate of
Martha Joan Banzhoff
c/o Harry G. Banzhoff,
Executor

2308 STUMPSTOWN ROAD
MECHANICSBURG, PA 17055
(717) 691-5572

PROJECT

Banzhoff Tract

UPPER ALLEN TOWNSHIP, CUMBERLAND COUNTY, PA

PHASE

PRELIMINARY

DRAWING

POST CONSTRUCTION STORMWATER MANAGEMENT DETAILS

© 2021 MELHAM ASSOCIATES PC

SCALE

AS SHOWN

JOB #

7680

CADD

7680C-5.dwg

DATE

7/27/21

SHEET

C-5.6

Jul 27, 2021 Z:\Prj-7000\7680\Banzhoff\Pre\dwg\7680C-5.dwg

CONFIGURATION DETAIL

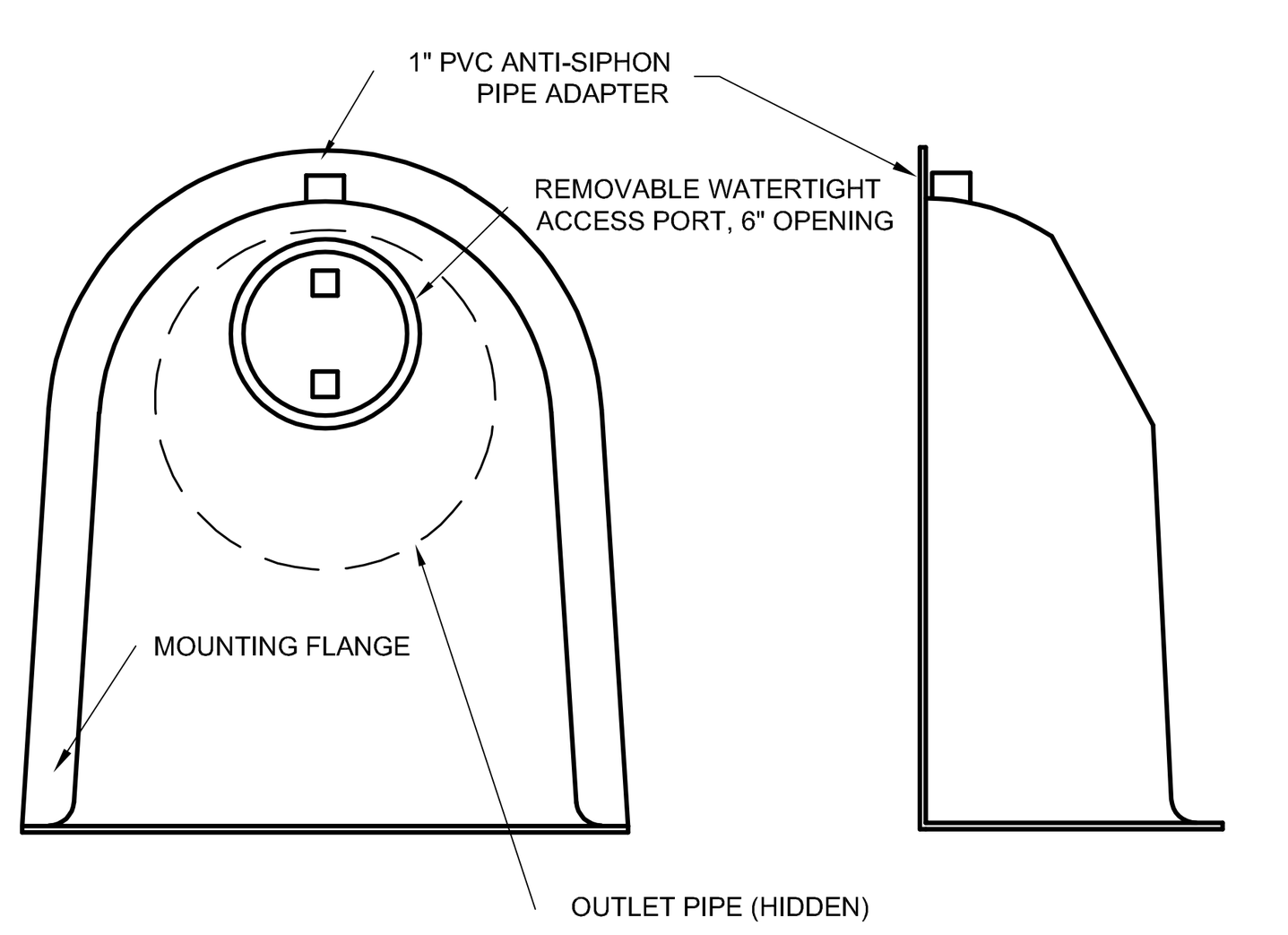

SNOUT OIL-WATER-DEBRIS SEPARATOR

TYPICAL INSTALLATION

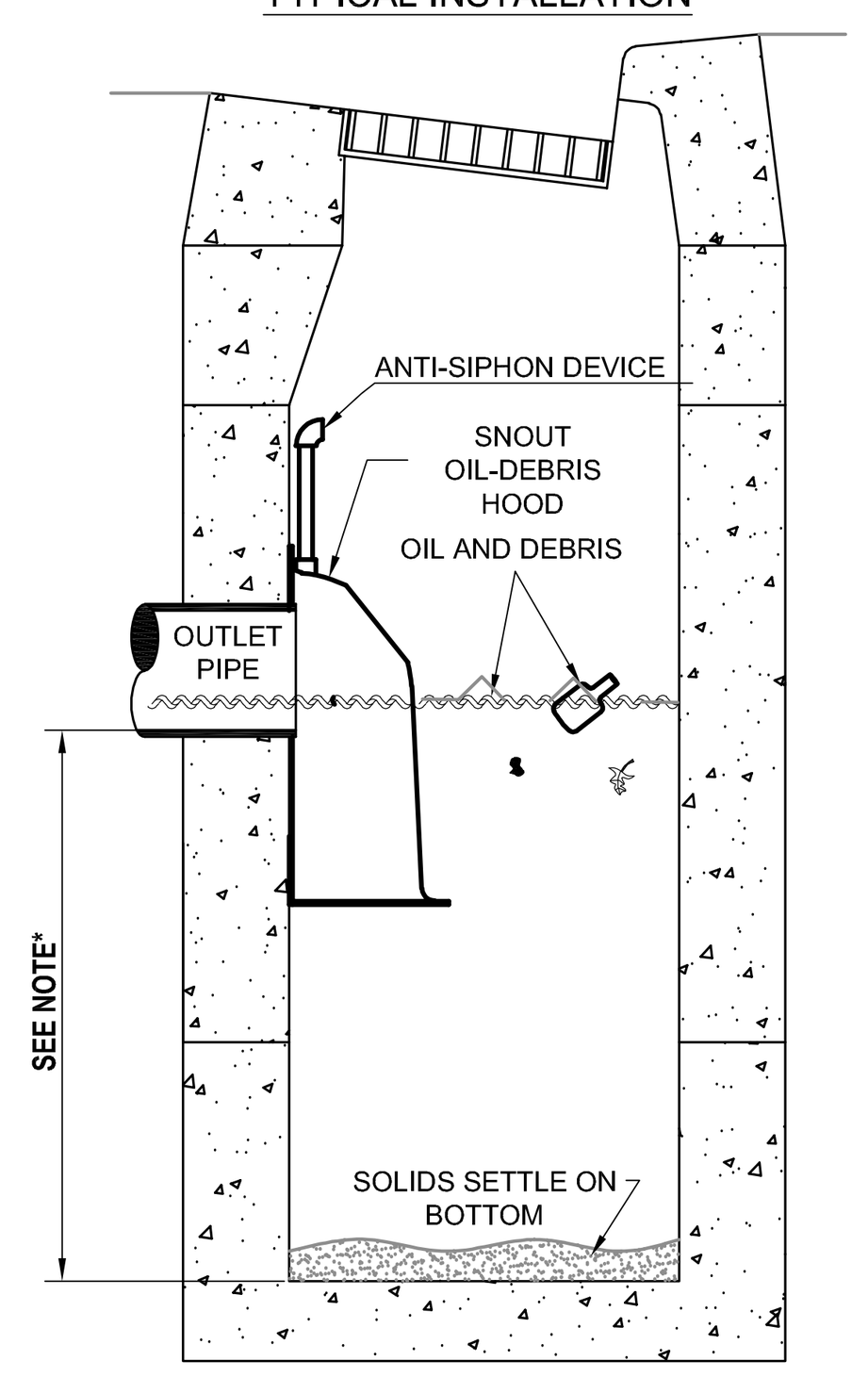

***NOTE-** SUMP DEPTH OF 36" MIN. FOR < OR= 12" DIAM. OUTLET. FOR OUTLETS >OR= 15", DEPTH = 2.5-3X DIAM.

NOTES:

1. ALL HOODS AND TRAPS FOR CATCH BASINS AND WATER QUALITY STRUCTURES SHALL BE AS MANUFACTURED BY:
   BEST MANAGEMENT PRODUCTS, INC.
   53 MT. ARCHER RD.
   LYME, CT 06371
   (860) 434-0277, (860) 434-3195 FAX
   TOLL FREE: (800) 504-8008 OR (888) 354-7585
   WEB SITE: www.bmpinc.com
   OR PRE-APPROVED EQUAL
2. ALL HOODS SHALL BE CONSTRUCTED OF A GLASS REINFORCED RESIN COMPOSITE WITH ISO GEL COAT EXTERIOR FINISH WITH A MINIMUM 0.125" LAMINATE THICKNESS.
3. ALL HOODS SHALL BE EQUIPPED WITH A WATERTIGHT ACCESS PORT, A MOUNTING FLANGE, AND AN ANTI-SIPHON VENT AS DRAWN. (SEE CONFIGURATION DETAIL)
4. THE SIZE AND POSITION OF THE HOOD SHALL BE DETERMINED BY OUTLET PIPE SIZE AS PER MANUFACTURER'S RECOMMENDATION.
5. THE BOTTOM OF THE HOOD SHALL EXTEND DOWNWARD A DISTANCE EQUAL TO 1/2 THE OUTLET PIPE DIAMETER WITH A MINIMUM DISTANCE OF 6" FOR PIPES <12" I.D.
6. THE ANTI-SIPHON VENT SHALL EXTEND ABOVE HOOD BY MINIMUM OF 3" AND A MAXIMUM OF 24" ACCORDING TO STRUCTURE CONFIGURATION.
7. THE SURFACE OF THE STRUCTURE WHERE THE HOOD IS MOUNTED SHALL BE FINISHED SMOOTH AND FREE OF LOOSE MATERIAL.
8. THE HOOD SHALL BE SECURELY ATTACHED TO STRUCTURE WALL WITH 3/8' STAINLESS STEEL BOLTS AND OIL-RESISTANT GASKET AS SUPPLIED BY MANUFACTURER. (SEE INSTALLATION DETAIL)
9. INSTALLATION INSTRUCTIONS SHALL BE FURNISHED WITH MANUFACTURER SUPPLIED INSTALLATION KIT.
   INSTALLATION KIT SHALL INCLUDE:
   A. INSTALLATION INSTRUCTIONS
   B. PVC ANTI-SIPHON VENT PIPE AND ADAPTER
   C. OIL-RESISTANT CRUSHED CELL FOAM GASKET WITH PSA BACKING
   D. 3/8" STAINLESS STEEL BOLTS
   E. ANCHOR SHIELDS

US Patent # 6126817

INSTALLATION DETAIL

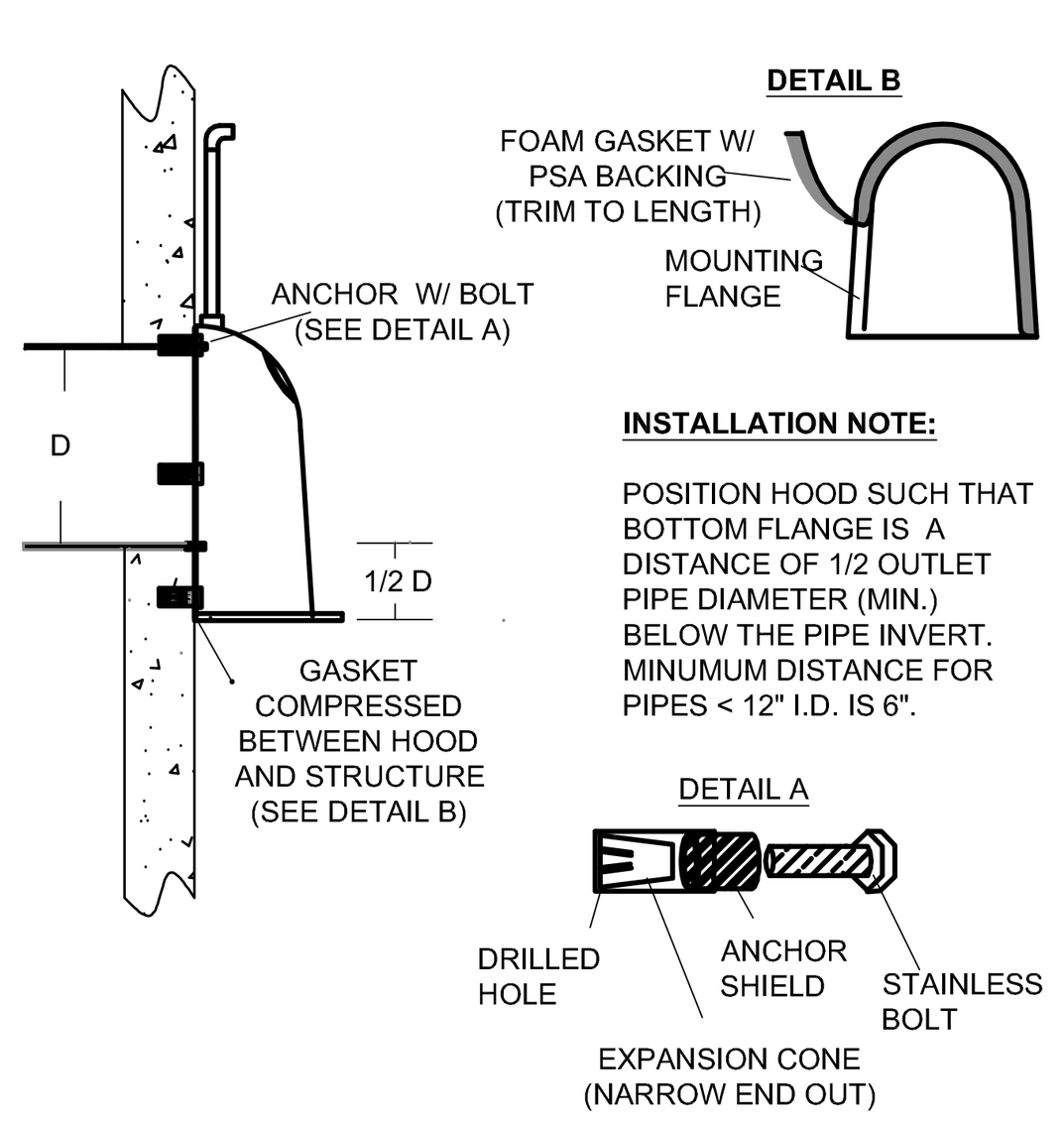

HOOD SPECIFICATION FOR CATCH BASINS AND WATER QUALITY STRUCTURES

DESCRIPTION	DATE	SCALE
OIL- DEBRIS HOOD SPECIFICATION AND INSTALLATION (TYPICAL)	09/08/00	NONE
	DRAWING NUMBER SP-SN	

SSMH–11 SNOUT

USE 24R SNOUT
MAX INSIDE PIPE ø = 18"
SUMP DEPTH = 48"

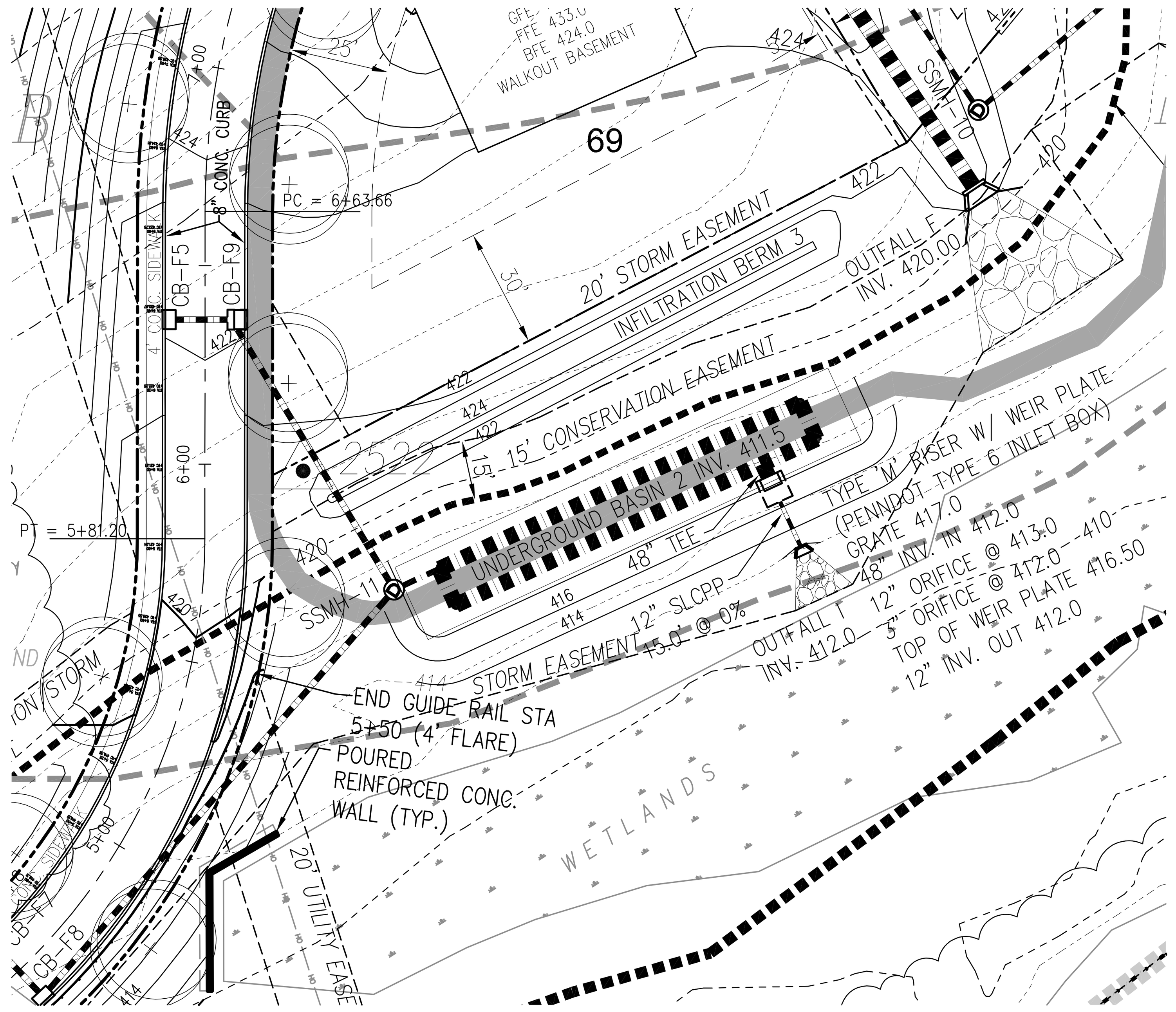

UNDERGROUND BASIN 2

SCALE: 1" = 30'

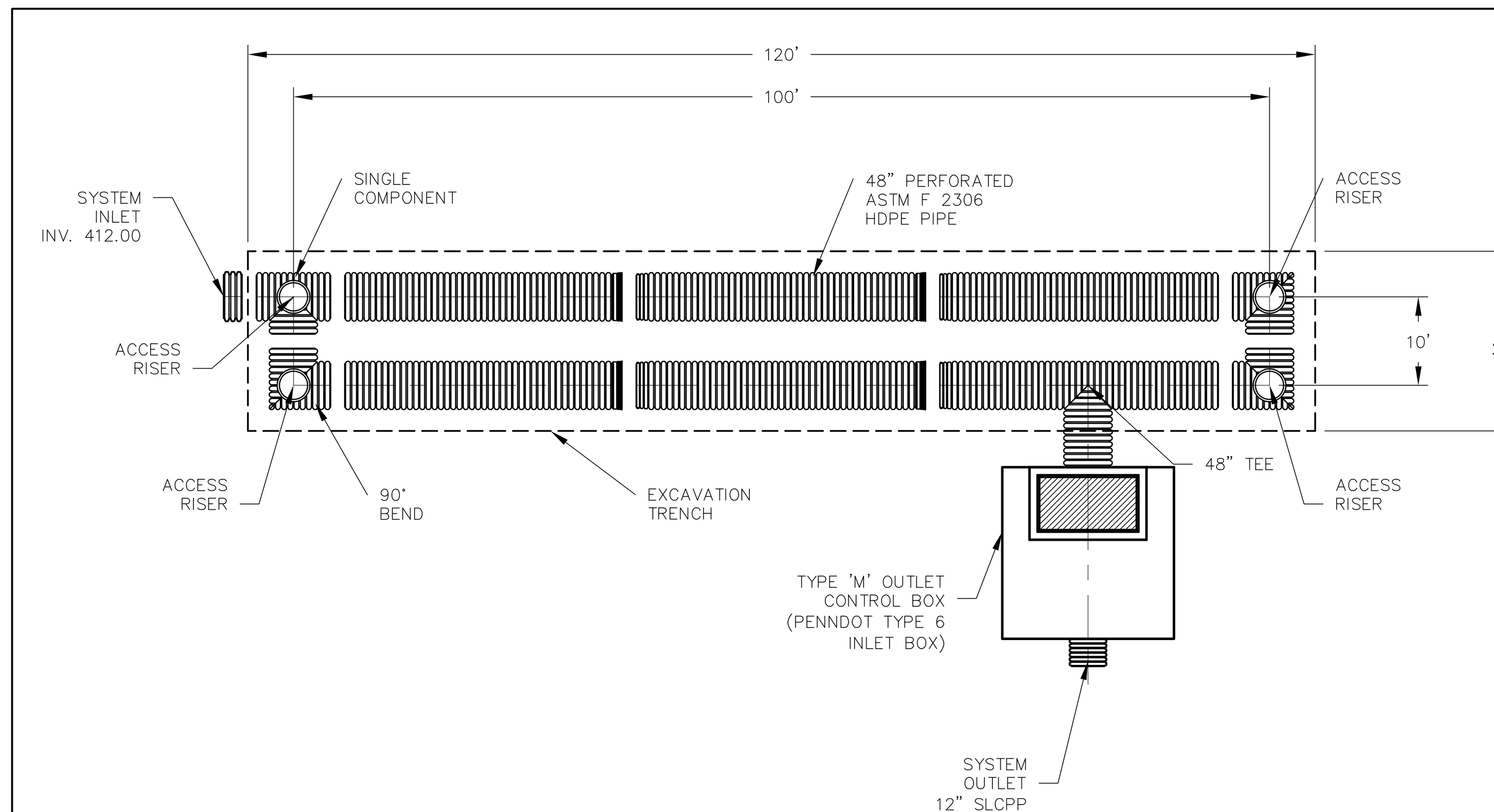

NOTES:

1. FOR INSTALLATION RECOMMENDATIONS, SEE STD–702 "TYPICAL RET/DET CROSS–SECTION DETAIL" AND STD–703 "TYPICAL RET/DET/CLEANOUT DETAIL"

©2007 ADS, INC.

1	ADDED ASTM F 2306 LEADER	TJR	08/20/07		NOTE: ALL DIMENSIONS ARE ± 1/2 FOOT.
REV.	DESCRIPTION	BY	MM/DD/YY	CHK'D	

ADVANCED DRAINAGE SYSTEMS, INC. ("ADS") HAS PREPARED THIS DETAIL BASED ON INFORMATION PROVIDED TO ADS. THIS DRAWING IS INTENDED TO DEPICT THE COMPONENTS AS REQUESTED. ADS HAS NOT PERFORMED ANY ENGINEERING OR DESIGN SERVICES FOR THIS PROJECT, NOR HAS ADS INDEPENDENTLY VERIFIED THE INFORMATION SUPPLIED. THE INSTALLATION DETAILS PROVIDED HEREIN ARE GENERAL RECOMMENDATIONS AND ARE NOT SPECIFIC FOR THIS PROJECT. THE DESIGN ENGINEER SHALL REVIEW THESE DETAILS PRIOR TO CONSTRUCTION. IT IS THE DESIGN ENGINEERS RESPONSIBILITY TO ENSURE THE DETAILS PROVIDED HEREIN MEETS OR EXCEEDS THE APPLICABLE NATIONAL, STATE, OR LOCAL REQUIREMENTS AND TO ENSURE THAT THE DETAILS PROVIDED HEREIN ARE ACCEPTABLE FOR THIS PROJECT.

DIA. DET/RET SYSTEM
TYPICAL SUBSURFACE DET.\RET. SYSTEM LAYOUT DETAIL
DRAWING NUMBER: STD–701
ADS 4640 TRUEMAN BLVD HILLIARD, OHIO 43026 ADVANCED DRAINAGE SYSTEMS, INC.
TJR 03/14/07 NTS OF

SYSTEM F UNDERGROUND BASIN 2

NOT TO SCALE

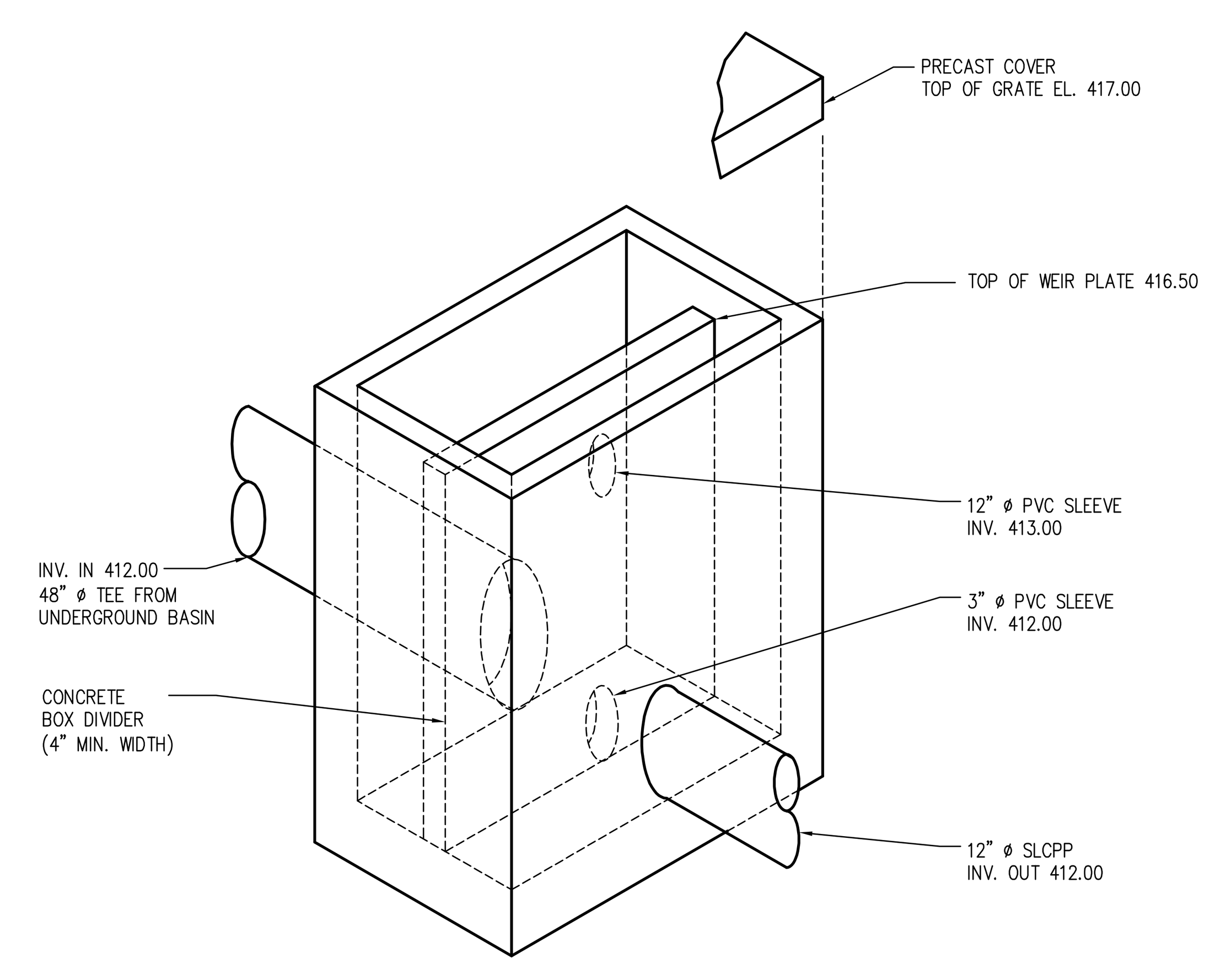

TYPE 'M' INLET (PENNDOT TYPE 6 INLET BOX)
WITH CONCRETE BOX DIVIDER DETAIL
UNDERGROUND BASIN 2 OUTLET STRUCTURE

NO SCALE

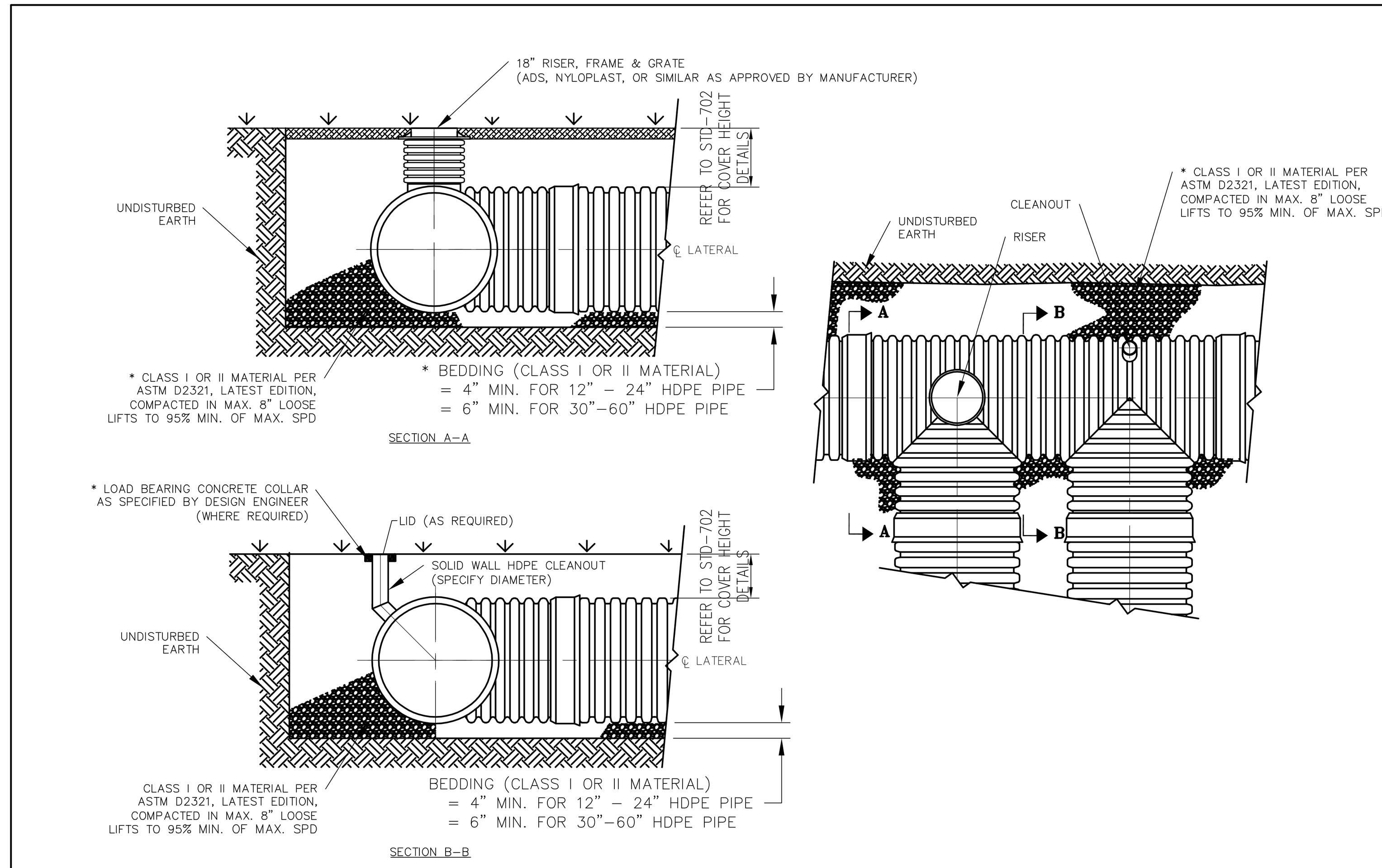

* CLASS I BACKFILL REQUIRED AROUND 60" DIAMETER FITTINGS

* LOAD BEARING CONCRETE COLLAR SHALL BE CONSTRUCTED IN TRAFFIC AREAS SUCH THAT THE LIVE LOAD IS TRANSMITTED TO THE SURROUNDING SOIL AND NOT DIRECTLY TO THE RISER.

©2007 ADS, INC.

2	ADDED 60" FITTINGS NOTE	TJR	07/25/08	CKS	NOTE: ALL DIMENSIONS ARE ± 1/2 FOOT.
REV.	DESCRIPTION	BY	MM/DD/YY	CHK'D	

ADVANCED DRAINAGE SYSTEMS, INC. ("ADS") HAS PREPARED THIS DETAIL BASED ON INFORMATION PROVIDED TO ADS. THIS DRAWING IS INTENDED TO DEPICT THE COMPONENTS AS REQUESTED. ADS HAS NOT PERFORMED ANY ENGINEERING OR DESIGN SERVICES FOR THIS PROJECT, NOR HAS ADS INDEPENDENTLY VERIFIED THE INFORMATION SUPPLIED. THE INSTALLATION DETAILS PROVIDED HEREIN ARE GENERAL RECOMMENDATIONS AND ARE NOT SPECIFIC FOR THIS PROJECT. THE DESIGN ENGINEER SHALL REVIEW THESE DETAILS PRIOR TO CONSTRUCTION. IT IS THE DESIGN ENGINEERS RESPONSIBILITY TO ENSURE THE DETAILS PROVIDED HEREIN MEETS OR EXCEEDS THE APPLICABLE NATIONAL, STATE, OR LOCAL REQUIREMENTS AND TO ENSURE THAT THE DETAILS PROVIDED HEREIN ARE ACCEPTABLE FOR THIS PROJECT.

DIA. DET/RET SYSTEM
TYPICAL RET/DET RISER/CLEAN-OUT DETAIL
DRAWING NUMBER: STD–703
ADS 4640 TRUEMAN BLVD HILLIARD, OHIO 43026 ADVANCED DRAINAGE SYSTEMS, INC.
CRM 10/23/06 NTS OF

SYSTEM F UNDERGROUND BASIN 2

NOT TO SCALE

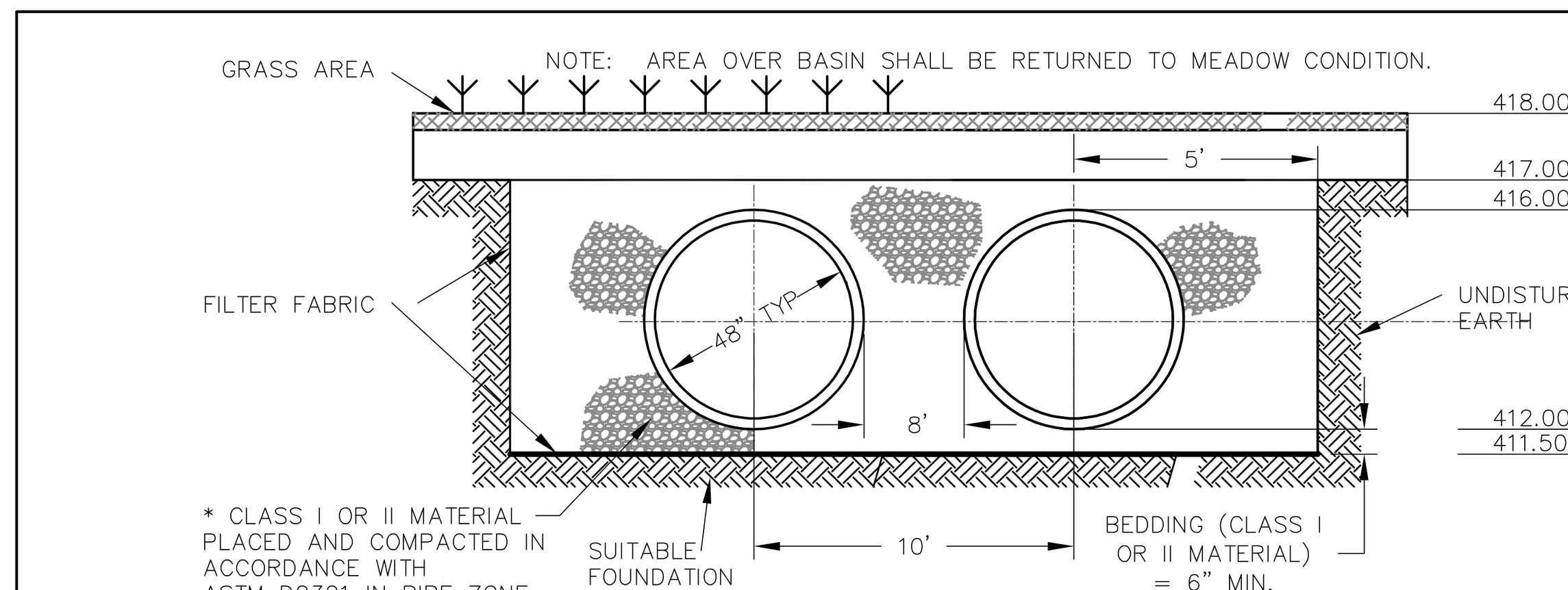

NOTES:

1. ALL REFERENCES TO CLASS I OR II MATERIAL ARE PER ASTM D2321 "STANDARD PRACTICE FOR UNDERGROUND INSTALLATION OF THERMOPLASTIC PIPE FOR SEWERS AND OTHER GRAVITY FLOW APPLICATIONS", LATEST EDITION.
2. ALL RETENTION AND DETENTION SYSTEMS SHALL BE INSTALLED IN ACCORDANCE WITH ASTM D2321, LATEST EDITION AND THE MANUFACTURER'S PUBLISHED INSTALLATION GUIDELINES.
3. MEASURES SHOULD BE TAKEN TO PREVENT THE MIGRATION OF NATIVE FINES INTO THE BACKFILL MATERIAL, WHEN REQUIRED. SEE ASTM D2321.
4. FILTER FABRIC: A GEOTEXTILE FABRIC MAY BE USED AS SPECIFIED BY THE ENGINEER TO PREVENT THE MIGRATION OF FINES FROM THE NATIVE SOIL INTO THE SELECT BACKFILL MATERIAL.
5. FOUNDATION: WHERE THE TRENCH BOTTOM IS UNSTABLE, THE CONTRACTOR SHALL EXCAVATE TO A DEPTH REQUIRED BY THE ENGINEER AND REPLACE WITH SUITABLE MATERIAL AS SPECIFIED BY THE ENGINEER. AS AN ALTERNATIVE AND AT THE DISCRETION OF THE DESIGN ENGINEER, THE TRENCH BOTTOM MAY BE STABILIZED USING A GEOTEXTILE MATERIAL.
6. BEDDING: SUITABLE MATERIAL SHALL BE CLASS I OR II. THE CONTRACTOR SHALL PROVIDE DOCUMENTATION FOR MATERIAL SPECIFICATION TO ENGINEER. UNLESS OTHERWISE NOTED BY THE ENGINEER, MINIMUM BEDDING THICKNESS SHALL BE 4" (100mm) FOR 4"–24" (100mm–600mm); 6" (150mm) FOR 30"–60" (750mm–900mm).
7. INITIAL BACKFILL: SUITABLE MATERIAL SHALL BE CLASS I OR II IN THE PIPE ZONE EXTENDING NOT LESS THAN 6" ABOVE CROWN OF PIPE. THE CONTRACTOR SHALL PROVIDE DOCUMENTATION FOR MATERIAL SPECIFICATION TO ENGINEER. MATERIAL SHALL BE INSTALLED AS REQUIRED IN ASTM D2321, LATEST EDITION.
8. MINIMUM COVER: MINIMUM COVER OVER ALL RETNETION/DETENTION SYSTEMS IN NON–TRAFFIC APPLICATIONS (GRASS OR LANDSCAPE AREAS) IS 12" FROM TOP OF PIPE TO GROUND SURFACE. ADDITIONAL COVER MAY BE REQUIRED TO PREVENT FLOATATION. FOR TRAFFIC APPLICATIONS, MINIMUM COVER IS 12" UP TO 36" DIAMETER PIPE AND 24" OF COVER FOR 42" – 60" DIAMETER PIPE, MEASURED FROM TOP OF PIPE TO BOTTOM OF FLEXIBLE PAVEMENT OR TO TOP OF RIGID PAVEMENT.

©2007 ADS, INC.

3	REVISED 18" SPACING	TJR	01/05/09	CKS	NOTE: ALL DIMENSIONS ARE ± 1/2 FOOT.
REV.	DESCRIPTION	BY	MM/DD/YY	CHK'D	

ADVANCED DRAINAGE SYSTEMS, INC. ("ADS") HAS PREPARED THIS DETAIL BASED ON INFORMATION PROVIDED TO ADS. THIS DRAWING IS INTENDED TO DEPICT THE COMPONENTS AS REQUESTED. ADS HAS NOT PERFORMED ANY ENGINEERING OR DESIGN SERVICES FOR THIS PROJECT, NOR HAS ADS INDEPENDENTLY VERIFIED THE INFORMATION SUPPLIED. THE INSTALLATION DETAILS PROVIDED HEREIN ARE GENERAL RECOMMENDATIONS AND ARE NOT SPECIFIC FOR THIS PROJECT. THE DESIGN ENGINEER SHALL REVIEW THESE DETAILS PRIOR TO CONSTRUCTION. IT IS THE DESIGN ENGINEERS RESPONSIBILITY TO ENSURE THE DETAILS PROVIDED HEREIN MEETS OR EXCEEDS THE APPLICABLE NATIONAL, STATE, OR LOCAL REQUIREMENTS AND TO ENSURE THAT THE DETAILS PROVIDED HEREIN ARE ACCEPTABLE FOR THIS PROJECT.

DIA. DET/RET SYSTEM
TYPICAL RET/DET CROSS SECTION DETAIL
DRAWING NUMBER: STD–702
ADS 4640 TRUEMAN BLVD HILLIARD, OHIO 43026 ADVANCED DRAINAGE SYSTEMS, INC.
AWM 07.25.06 NTS OF

SYSTEM F UNDERGROUND BASIN 2

NOT TO SCALE

Jul 27, 2021 Z:\Prj–7000\7680\Banzhoff\Pre\dwg\7680C–5.dwg

architecture
engineering
landscape architecture
planning
surveying

melham ASSOCIATES, PC

2247 North Front Street
Harrisburg, PA 17110

tel 717 238 5000

fax 717 236 2600

www.melham.com

[redacted]

CLIENT

Estate of
Martha Joan Banzhoff
c/o Harry G. Banzhoff,
Executor

2308 STUMPSTOWN ROAD
MECHANICSBURG, PA 17055
(717) 691-5572

PROJECT

Banzhoff Tract

UPPER ALLEN TOWNSHIP, CUMBERLAND COUNTY, PA

PHASE

PRELIMINARY

DRAWING

POST CONSTRUCTION STORMWATER MANAGEMENT DETAILS

© 2021 MELHAM ASSOCIATES PC

SCALE

AS SHOWN

[redacted]

JOB #

7680

CADD

7680C-5.dwg

DATE

7/27/21

SHEET

C-5.7

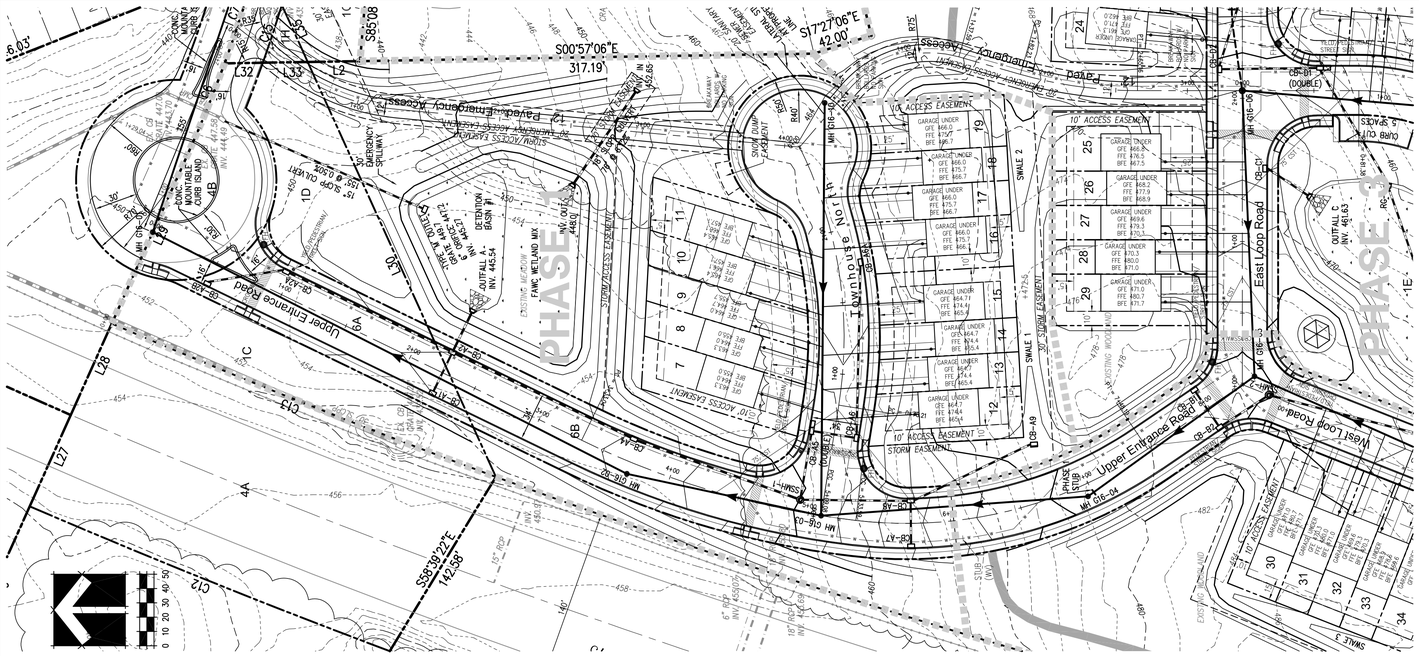

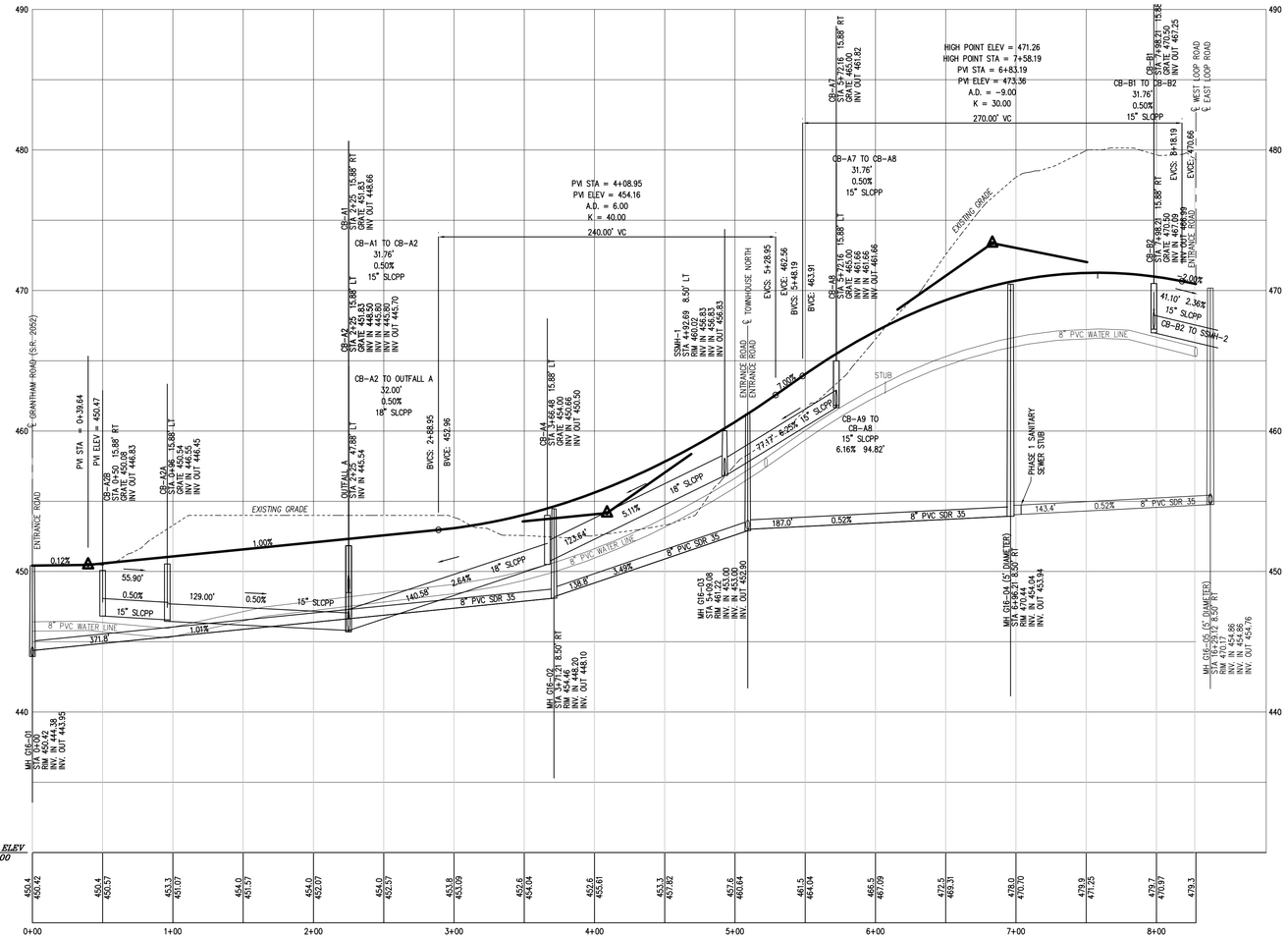

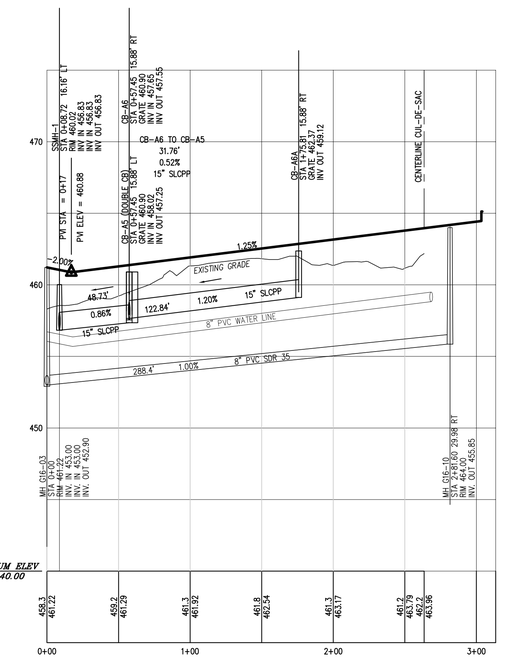

architecture
engineering
landscape architecture
planning
surveying

melham ASSOCIATES, PC

2247 North Front Street
Harrisburg, PA 17110

tel 717 238 5000

fax 717 236 2600

www.melham.com

CLIENT

Estate of
Martha Joan Banzhoff
c/o Harry G. Banzhoff,
Executor

2308 STUMPSTOWN ROAD
MECHANICSBURG, PA 17055
(717) 691-5572

PROJECT

Banzhoff Tract

UPPER ALLEN TOWNSHIP, CUMBERLAND COUNTY, PA

PHASE

PRELIMINARY

DRAWING

UPPER ENTRANCE ROAD AND TOWNHOUSE NORTH PLANS AND PROFILES

© 2021 MELHAM ASSOCIATES PC

SCALE

PLAN: 1" = 50'
PROFILE: 1" = 50' HORIZONTAL
1" = 5' VERTICAL

JOB #

7680

CADD

7680C-6.dwg

DATE

7/27/21

SHEET

C-6.1

Apr 26, 2021 - 2:17pm P:\PROJ\7680\plotsheet\PVI.dwg 7680C-6.dwg

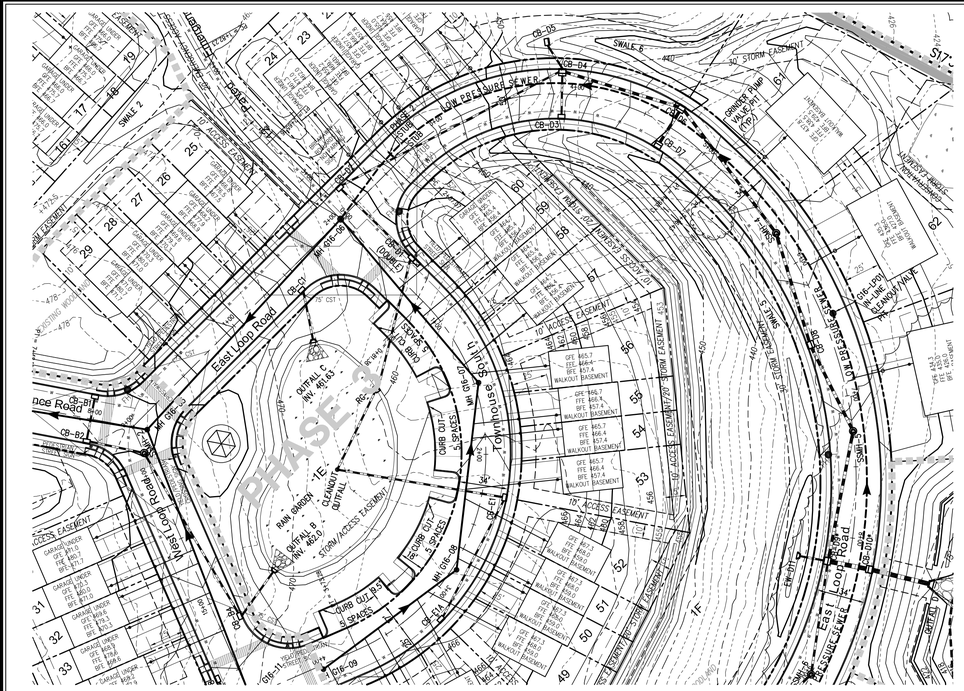
PHASE 2
East Loop Road
Townhouse South
OUTFALL C
INV. 461.63
OUTFALL B
INV. 463.3
OUTFALL A
INV. 465.0
RAIN GARDEN
CLEANOUT
STORM/ACCESS EASEMENT
CURB CUT
5 SPACES
CURB CUT
10 SPACES
CURB CUT
8 SPACES
SWALE 3
SWALE 2
SWALE 1
SWALE B
LOW PRESSURE SEWER
STORM EASEMENT
ACCESS EASEMENT
10' HOUSE EASEMENT
CB-01
CB-02
CB-03
CB-04
CB-05
CB-06
CB-07
CB-08
CB-09
CB-10
CB-11
CB-12
CB-13
CB-14
CB-15
CB-16
CB-17
CB-18
CB-19
CB-20
CB-21
CB-22
CB-23
CB-24
CB-25
CB-26
CB-27
CB-28
CB-29
CB-30
CB-31
CB-32
CB-33
CB-34
CB-35
CB-36
CB-37
CB-38
CB-39
CB-40

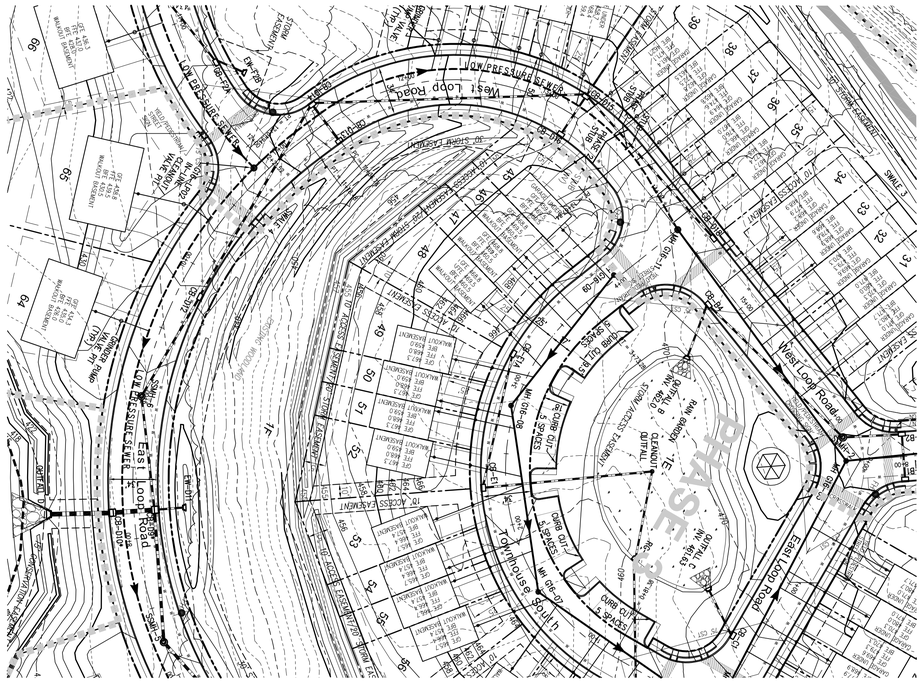
West Loop Road
East Loop Road
Townhouse South
LOW PRESSURE SEWER
PHASE 2
CB-D9*
CB-D10*
CB-D11*
CB-D12*
CB-D13
CB-D14
CB-D15
CB-D16
CB-B1
CB-B2
CB-B3
CB-B4
CB-B5
CB-B6
CB-B7
CB-B8
CB-B9
CB-B10
CB-B11
CB-B12
CB-B13
CB-B14
CB-B15
CB-B16
CB-B17
CB-B18
CB-B19
CB-B20
CB-B21
CB-B22
CB-B23
CB-B24
CB-B25
CB-B26
CB-B27
CB-B28
CB-B29
CB-B30
CB-B31
CB-B32
CB-B33
CB-B34
CB-B35
CB-B36
CB-B37
CB-B38
CB-B39
CB-B40

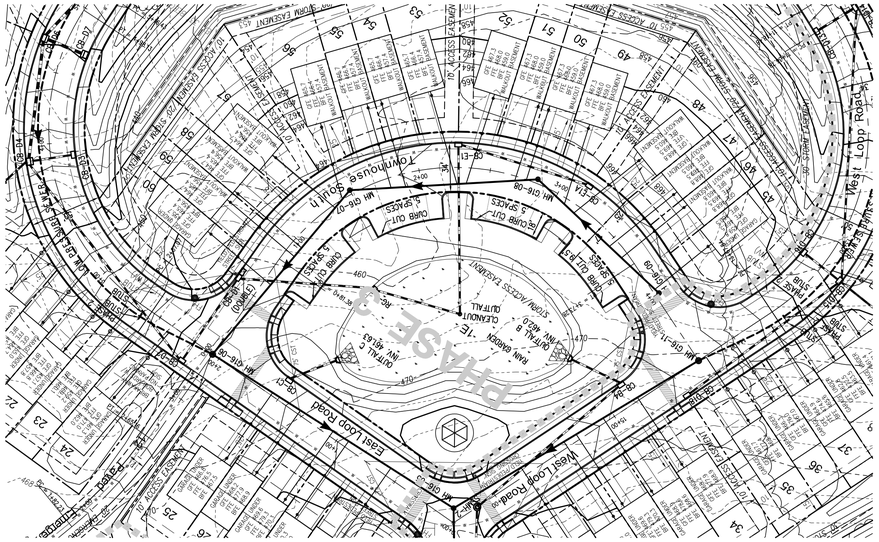
Townhouse South
East Loop Road
West Loop Road
CB-E1
CB-D1
CB-D2
RG-1
MH-E1
MH-E2
MH-E3
MH-E4
MH-E5
MH-E6
MH-E7
MH-E8
MH-E9
MH-E10
MH-E11
MH-E12
MH-E13
MH-E14
MH-E15
MH-E16
MH-E17
MH-E18
MH-E19
MH-E20
MH-E21
MH-E22
MH-E23
MH-E24
MH-E25
MH-E26
MH-E27
MH-E28
MH-E29
MH-E30
MH-E31
MH-E32
MH-E33
MH-E34
MH-E35
MH-E36
MH-E37
MH-E38
MH-E39
MH-E40

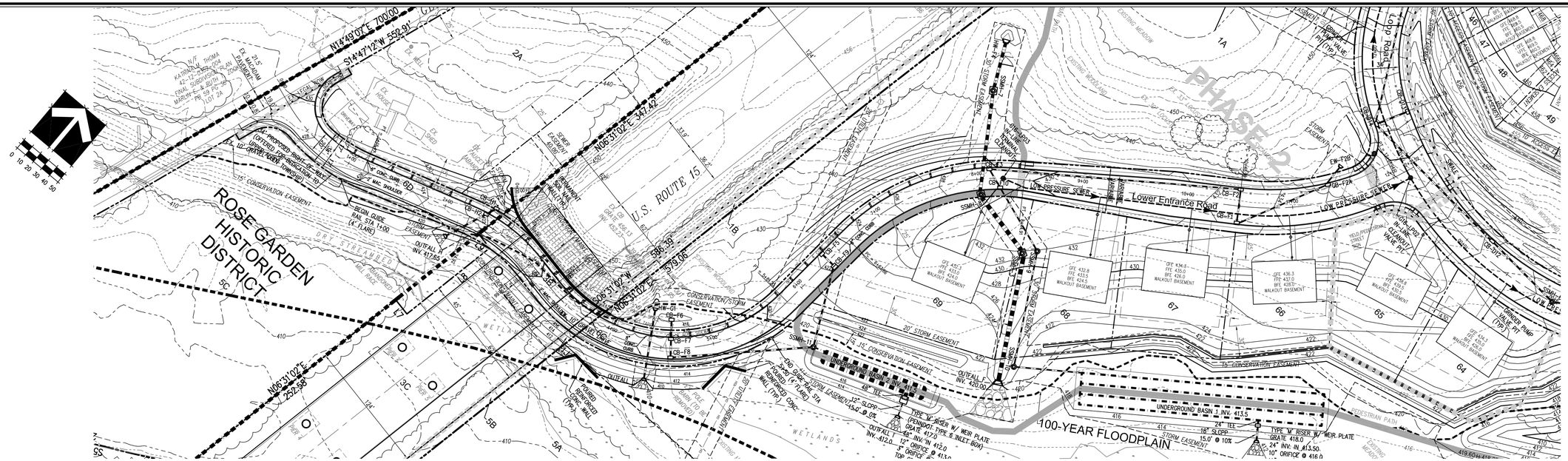
N14°49'07"E 709.00
S14°47'12"W 552.91
N06°31'02"E 347.42
S06°31'02"W 596.38
N06°31'02"E 579.06
N06°31'02"E 232.58
ROSE GARDEN HISTORIC DISTRICT
U.S. ROUTE 15
Lower Entrance Road
PHASE 2
PHASE 1
100-YEAR FLOODPLAIN
WETLAND'S
LOW PRESSURE SEWER
20' STORM EASEMENT
15' CONSERVATION EASEMENT
CONSERVATION/STORM EASEMENT
UNDERGROUND BASIN 1 INV. 413.5
SSMH-11
CB-F8
CB-F9
CB-F10
CB-F1
CB-F2
CB-F2A
CB-H1
CB-H2
HW-G1
HW-G2
OUTFALL G
OUTFALL H
EXISTING GRADE AT ROAD CENTERLINE
EXISTING MEADOW
EXISTING WOODLAND
EXISTING ROAD
EX. 10" WATER LINE
EX. 8" SEWER LINE
EX. 12" GAS LINE
EX. 24" STORM
EX. 18" STORM
EX. 15" STORM
EX. 8" STORM
EX. 6" STORM
EX. 4" STORM
EX. 2" STORM
EX. 1" STORM
EX. 3" STORM
EX. 5" STORM
EX. 7" STORM
EX. 9" STORM
EX. 11" STORM
EX. 13" STORM
EX. 15" STORM
EX. 17" STORM
EX. 19" STORM
EX. 21" STORM
EX. 23" STORM
EX. 25" STORM
EX.

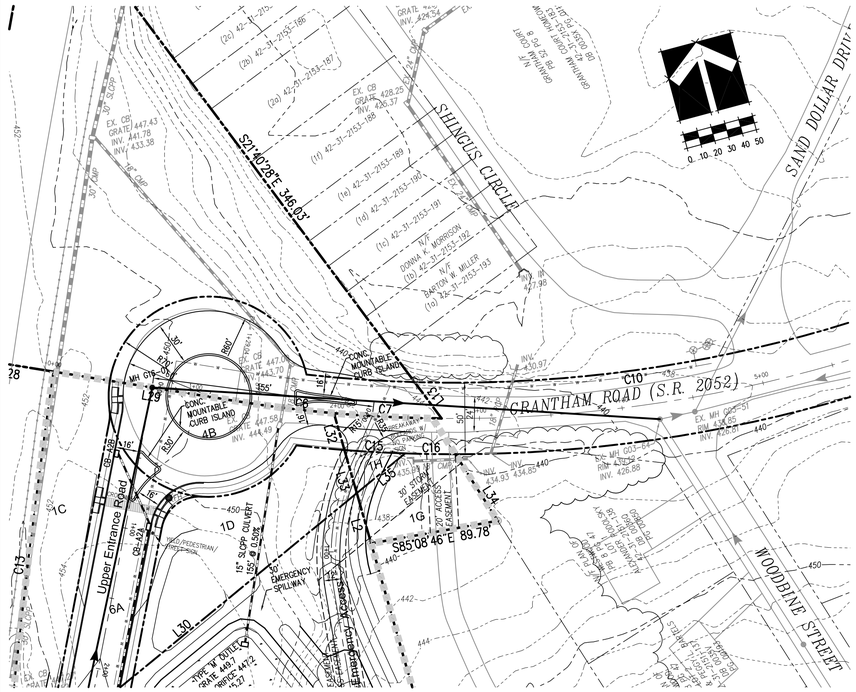

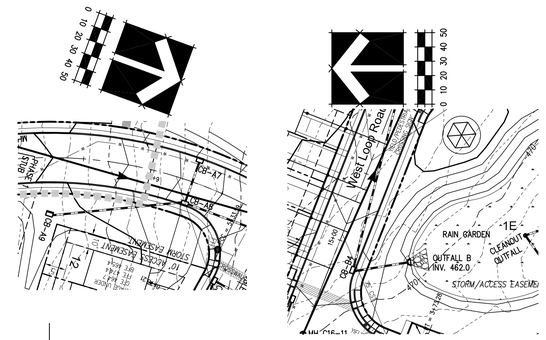

GRANTHAM ROAD
PLAN AND PROFILE

STORM BASIN
OFFROAD PROFILES

CB-A9 TO CB-A8
OFFROAD PROFILE

CB-B4 TO OUTFALL B
OFFROAD PROFILE

architecture
engineering
landscape architecture
planning
surveying

melham
ASSOCIATES, PC

2247 North Front Street
Harrisburg, PA 17110

tel 717 238 5000

fax 717 236 2600
www.melham.com

CLIENT

Estate of
Martha Joan Banzhoff
c/o Harry G. Banzhoff,
Executor

2308 STUMPSTOWN ROAD
MECHANICSBURG, PA 17055
(717) 691-5572

PROJECT

Banzhoff Tract

UPPER ALLEN TOWNSHIP, CUMBERLAND COUNTY, PA

PHASE

PRELIMINARY

DRAWING

GRANTHAM ROAD
AND OFFROAD STORM
PLANS AND PROFILES

© 2021 MELHAM ASSOCIATES PC

SCALE

PLAN: 1" = 50'
PROFILE: 1" = 50' HORIZONTAL
1" = 5' VERTICAL

JOB #

7680

CADD

7680C-6.dwg

DATE

7/27/21

SHEET

C-6.6

Apr 26, 2021 - 2:47pm P:\7600\7680 (Banzhoff)\PW\Tech\7680C-6.dwg

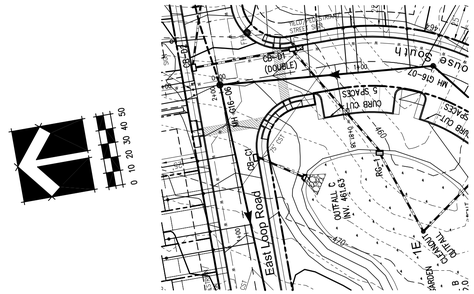
East Loop Road
CB-01 (DOUBLE)
CB-02
CB-03
CB-04
CB-05
CB-06
CB-07
CB-08
CB-09
CB-10
CB-11
CB-12
CB-13
CB-14
CB-15
CB-16
CB-17
CB-18
CB-19
CB-20
CB-21
CB-22
CB-23
CB-24
CB-25
CB-26
CB-27
CB-28
CB-29
CB-30
CB-31
CB-32
CB-33
CB-34
CB-35
CB-36
CB-37
CB-38
CB-39
CB-40
CB-41

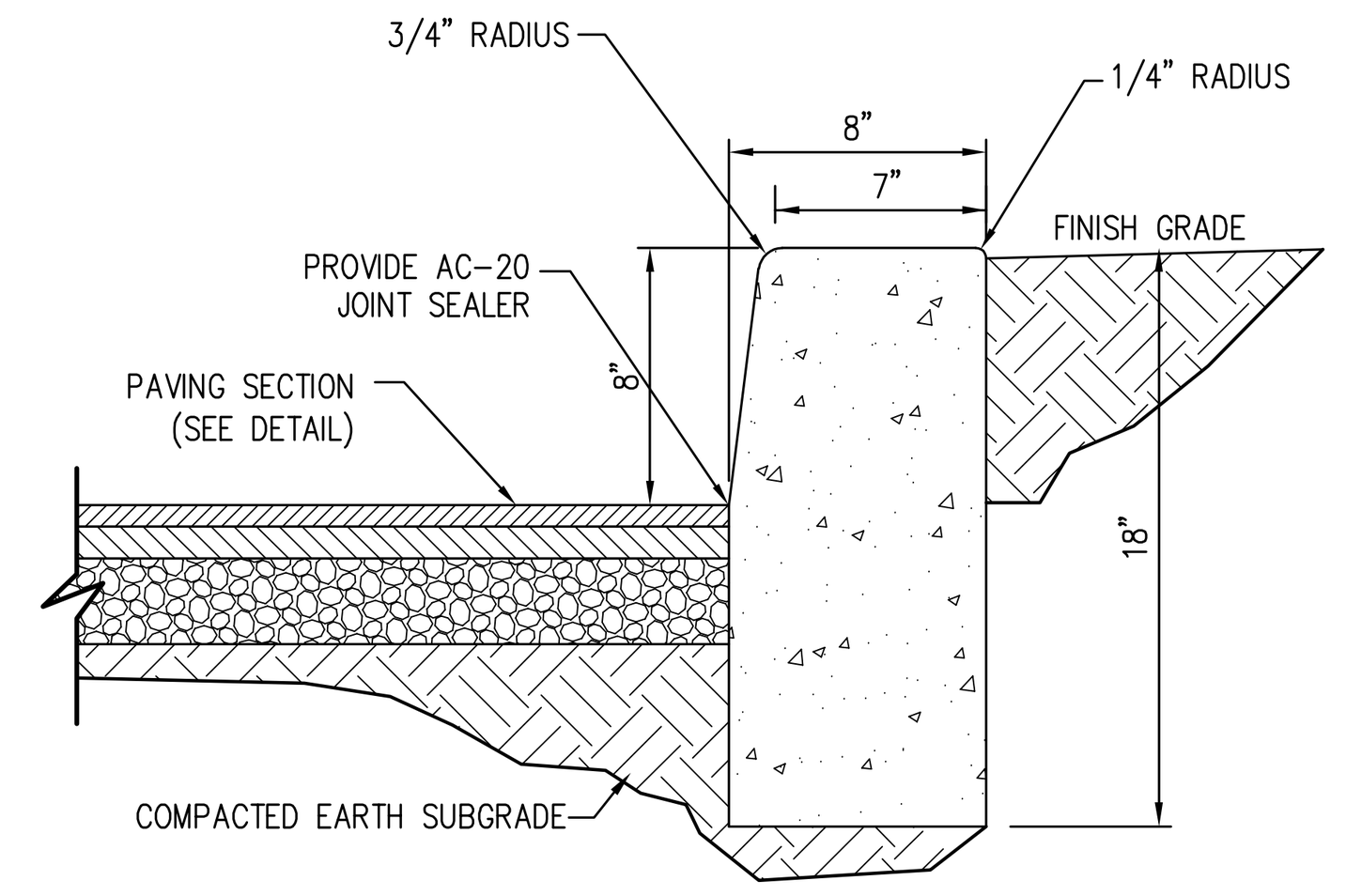

CONCRETE CURB NOTES:
1. CONCRETE CURB SHALL BE CONSTRUCTED IN ACCORDANCE WITH PENNDOT PUB 408 SPECIFICATIONS SECTION 630.
2. CLASS A CEMENT CONCRETE SHALL BE USED.
3. INSTALL CURB TO STANDARDS OUTLINED IN PENNDOT PUB 72M, STANDARDS FOR ROADWAY CONSTRUCTION RC-64M.
4. PLACE 3/4" PREMOULDED EXPANSION JOINT MATERIAL AT STRUCTURES, BEGINNING AND END OF ALL CURVES, AND AT THE END OF THE WORK DAY.
5. PLACE CONSTRUCTION JOINTS IN UNIFORM LENGTHS ON SECTIONS NOT TO EXCEED 20' MAXIMUM OR LESS THAN 4' MINIMUM SPACING.

STANDARD PennDOT CONCRETE CURB
NO SCALE

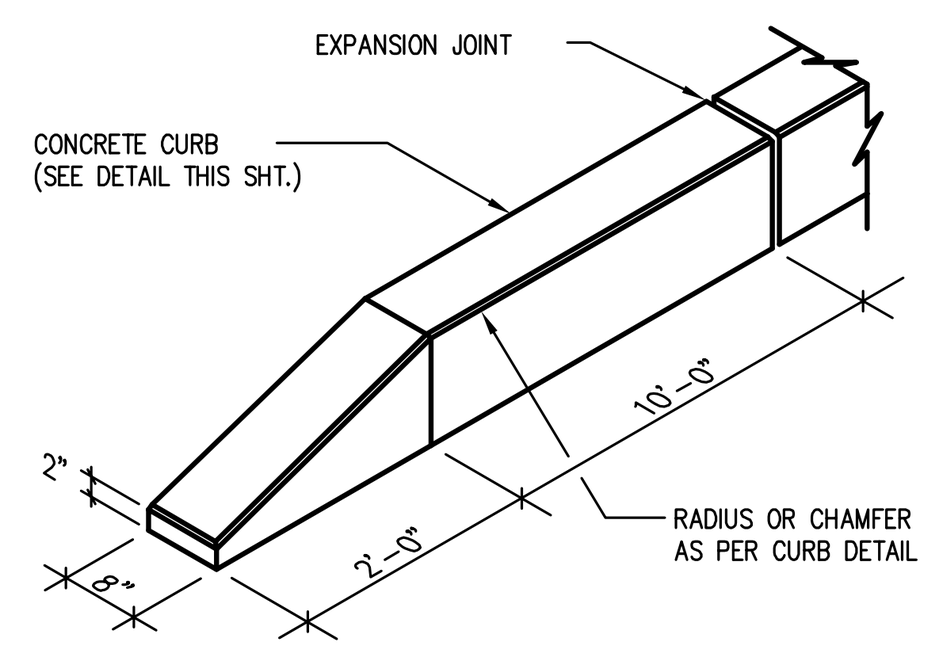

CURB TERMINUS DETAIL
NOT TO SCALE

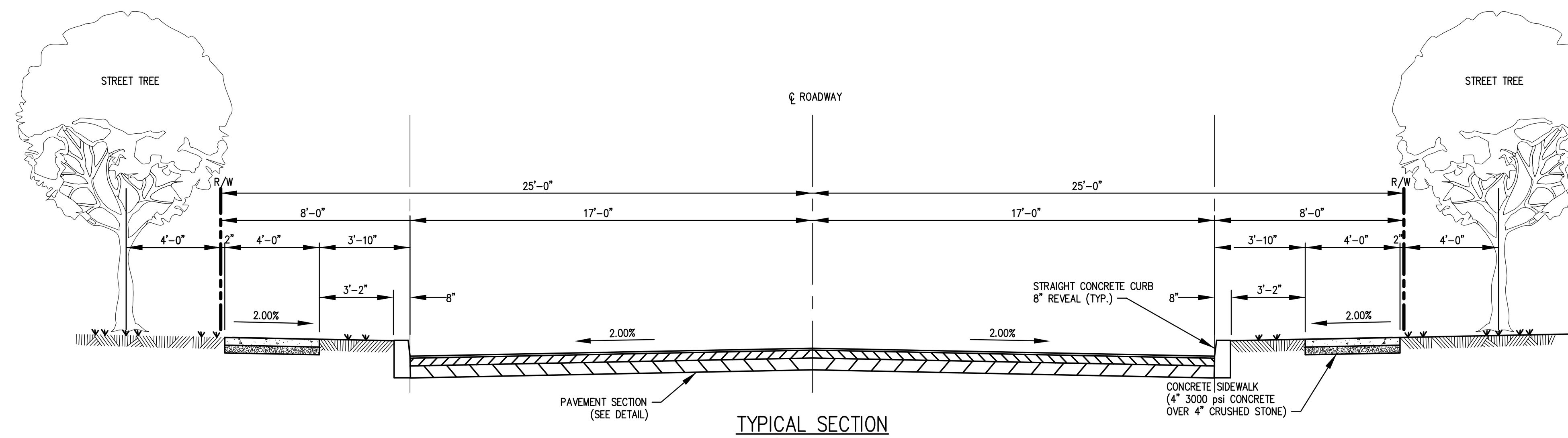

TYPICAL SECTION
34' CARTWAY
NOT TO SCALE

SIGHT DISTANCE TABLE

INTERSECTION	LEFT	RIGHT
TOWNHOUSE NORTH (STA 0+00)	UPPER ENTRANCE ROAD	UPPER ENTRANCE ROAD
REQUIRED CLEAR SIGHT:	121'	117'
ACTUAL CLEAR SIGHT:	161'	241'
UPPER ENTRANCE ROAD (STA 8+77.47)	EAST LOOP ROAD	WEST LOOP ROAD
REQUIRED CLEAR SIGHT:	119'	120'
ACTUAL CLEAR SIGHT:	217'	217'
TOWNHOUSE SOUTH (STA 0+00)	EAST LOOP ROAD	EAST LOOP ROAD
REQUIRED CLEAR SIGHT:	121'	117'
ACTUAL CLEAR SIGHT:	203'	141'
TOWNHOUSE SOUTH (STA 4+36.69)	WEST LOOP ROAD	WEST LOOP ROAD
REQUIRED CLEAR SIGHT:	117'	121'
ACTUAL CLEAR SIGHT:	141'	203'
LOWER ENTRANCE ROAD (STA 12+21.52)	WEST LOOP ROAD	EAST LOOP ROAD
REQUIRED CLEAR SIGHT:	121'	117'
ACTUAL CLEAR SIGHT:	245'	267'

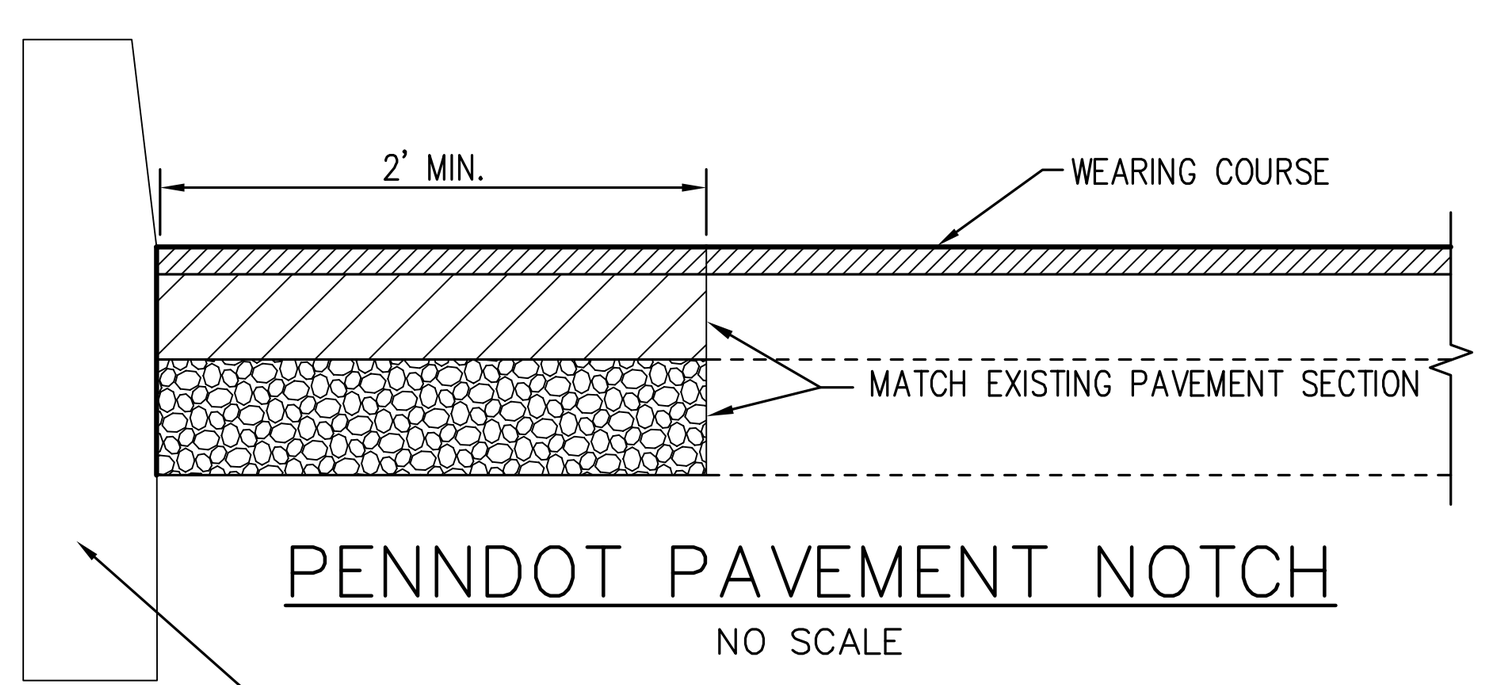

PENNDOT PAVEMENT NOTCH
NO SCALE

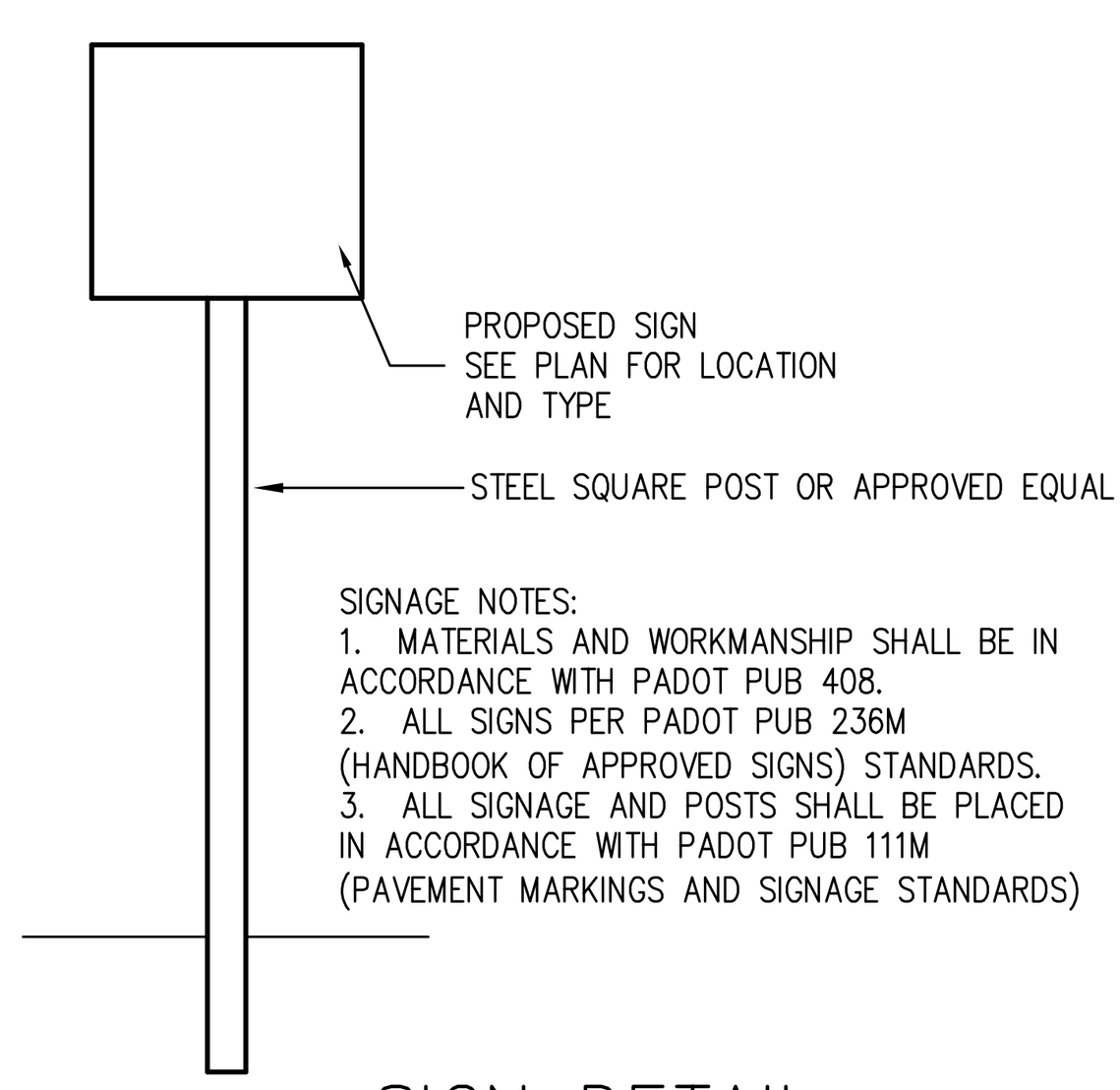

SIGNAGE NOTES:
1. MATERIALS AND WORKMANSHIP SHALL BE IN ACCORDANCE WITH PADOT PUB 408.
2. ALL SIGNS PER PADOT PUB 236M (HANDBOOK OF APPROVED SIGNS) STANDARDS.
3. ALL SIGNAGE AND POSTS SHALL BE PLACED IN ACCORDANCE WITH PADOT PUB 111M (PAVEMENT MARKINGS AND SIGNAGE STANDARDS)

SIGN DETAIL
NO SCALE

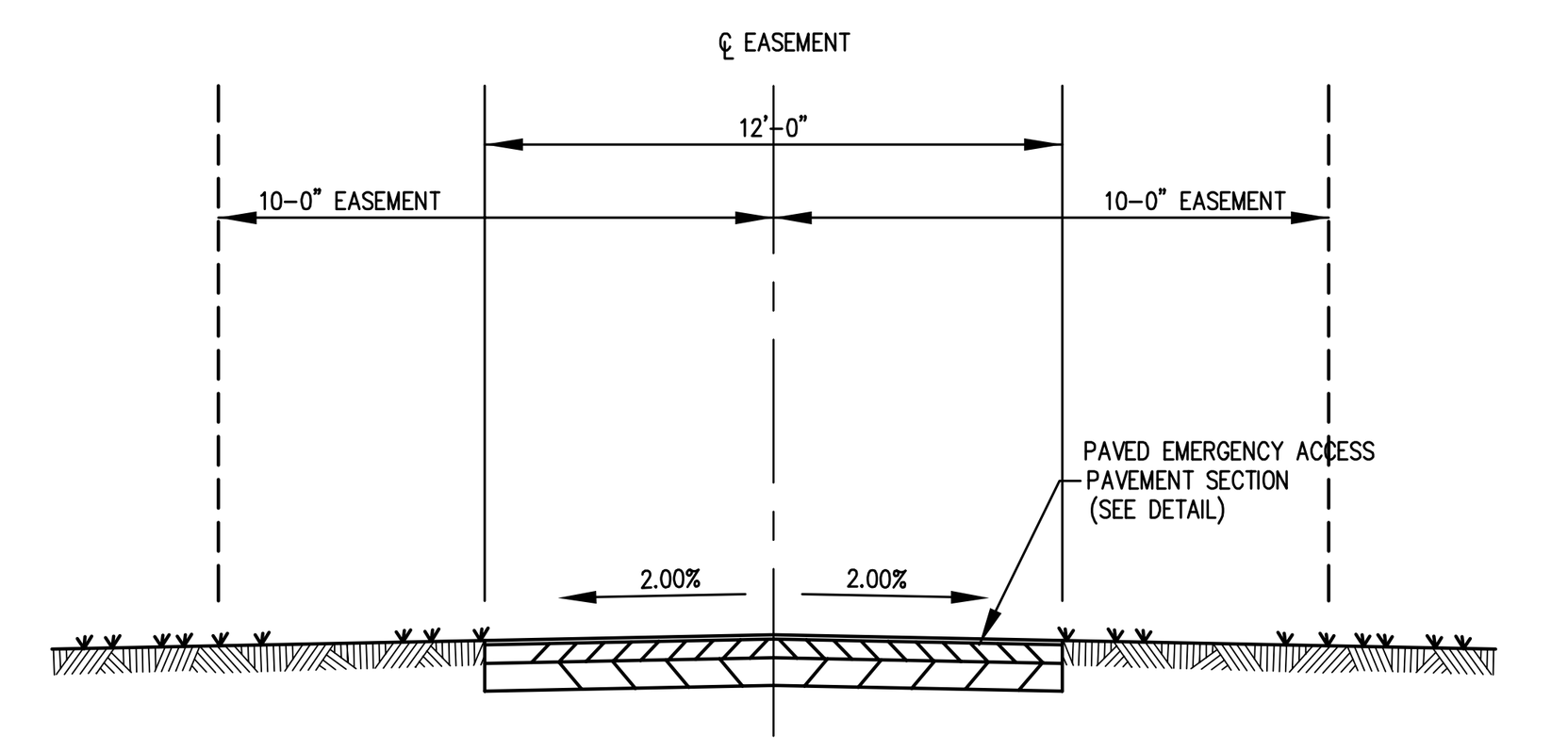

TYPICAL SECTION
12' PAVED EMERGENCY ACCESS
NOT TO SCALE

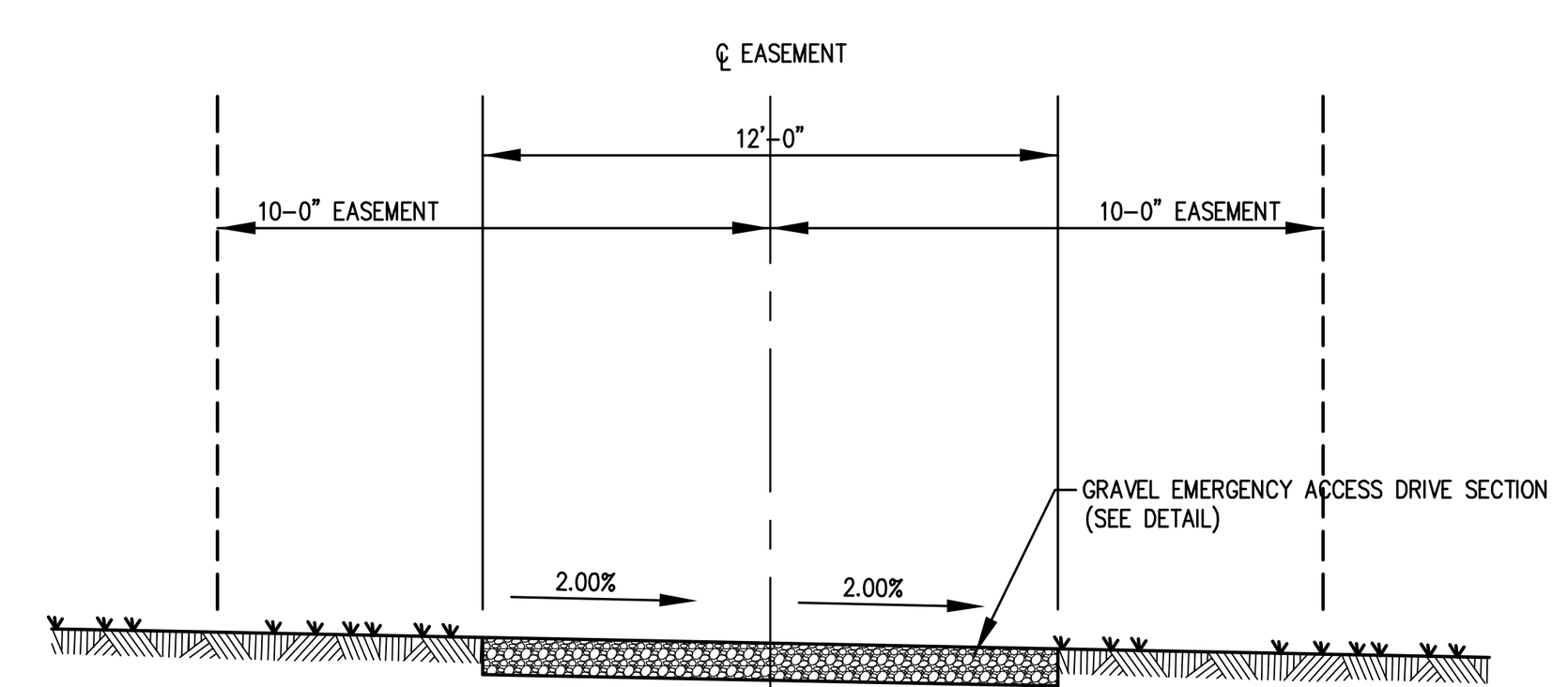

TYPICAL SECTION
12' GRAVEL EMERGENCY ACCESS (SUPERELEVATED)
NOT TO SCALE

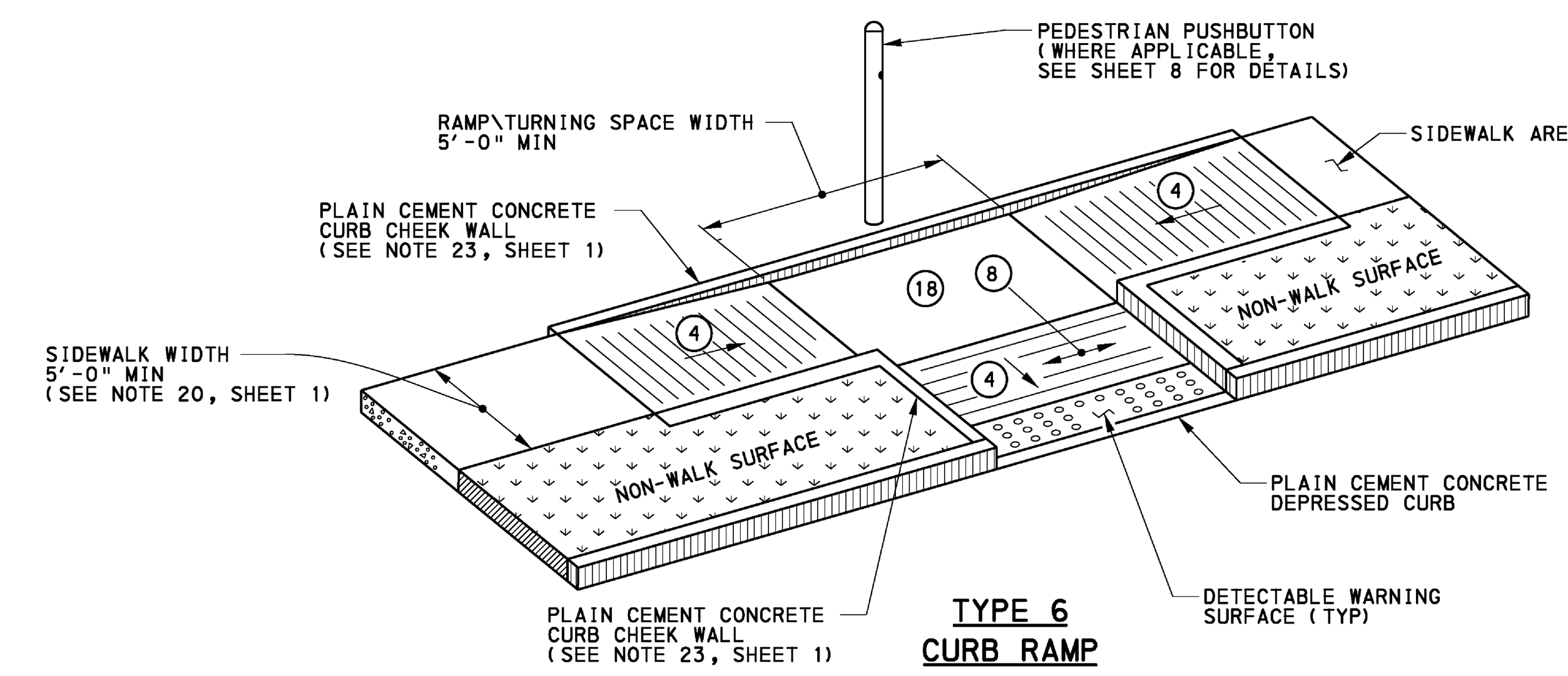

(4) 8.33% MAX RAMP SLOPE, SEE NOTE 8 SHEET 1.

(5) CURB RAMP WIDTH IS EQUAL TO SIDEWALK WIDTH WHEN THE SIDEWALK WIDTH IS GREATER THAN OR EQUAL TO 4'-0".

(8) SLOPE: ZERO ± 2.00%.

(18) CURB RAMPS REQUIRE A TURNING SPACE WITH A MAXIMUM CROSS SLOPE AND LONGITUDINAL SLOPE OF 2.00% WHERE PEDESTRIANS PERFORM TURNING MANEUVERS. SEE DETAILS FOR LOCATIONS AND DIMENSIONS.

TYPE 6 CURB RAMP COMBINATION
(PENNDOT RC-67M STANDARD)
NO SCALE

PROJECT-SPECIFIC NOTES:
1. ALL RAMPS TO BE TYPE 6 CURB RAMP COMBINATION (PENNDOT RC-67M STANDARD).
2. SIDEWALK AND RAMP WIDTHS TO BE CONSTRUCTED AT 4'-0" PER TOWNSHIP STANDARD (NOT 5'-0" WIDTH PER PENNDOT RC-67 DETAIL ABOVE).
3. CURB AT THE BACK OF THE SIDEWALK ADJACENT TO THE RIGHT-OF-WAY IS OPTIONAL. CONTRACTOR MAY FINISH GRADE FLUSH TO THE BACK OF THE SIDEWALK IN LIEU OF PROVIDING CURBING IN THIS AREA.
4. CONTRACTOR TO VERIFY EACH RAMP SLOPE WILL NOT EXCEED 8.33%. ANY RAMP THAT CANNOT MEET THESE SLOPE REQUIREMENTS MUST SUBMIT A PENNDOT TIF (TECHNICAL INFEASIBILITY FORM) TO THE TOWNSHIP.
5. TOWNSHIP ENGINEER TO INSPECT RAMPS DURING CONCRETE FORMING.
6. REFER TO RC-67M STANDARD SHEET 1 NOTES (BELOW).

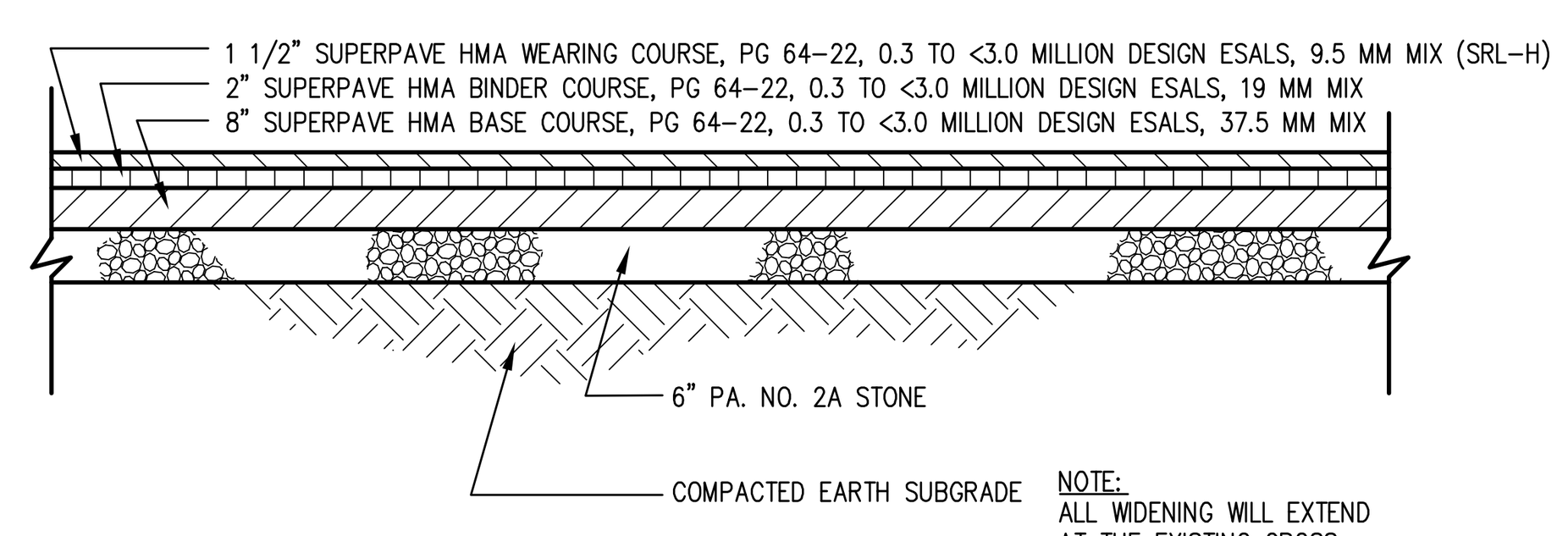

NOTE:
ALL WIDENING WILL EXTEND AT THE EXISTING CROSS SLOPE OR A 2% MINIMUM IN NORMAL CROWN AREAS

NOTE:
- CONTRACTOR SHALL NOT PAVE OVER WET OR SOFT SUBGRADE MATERIALS. NOTIFY THE ENGINEER IF SUCH CONDITIONS ARE ENCOUINTERED.
- FULL WIDTH OVERLAY SHALL BE PROVIDED.

PENNDOT PAVEMENT SECTION
NO SCALE

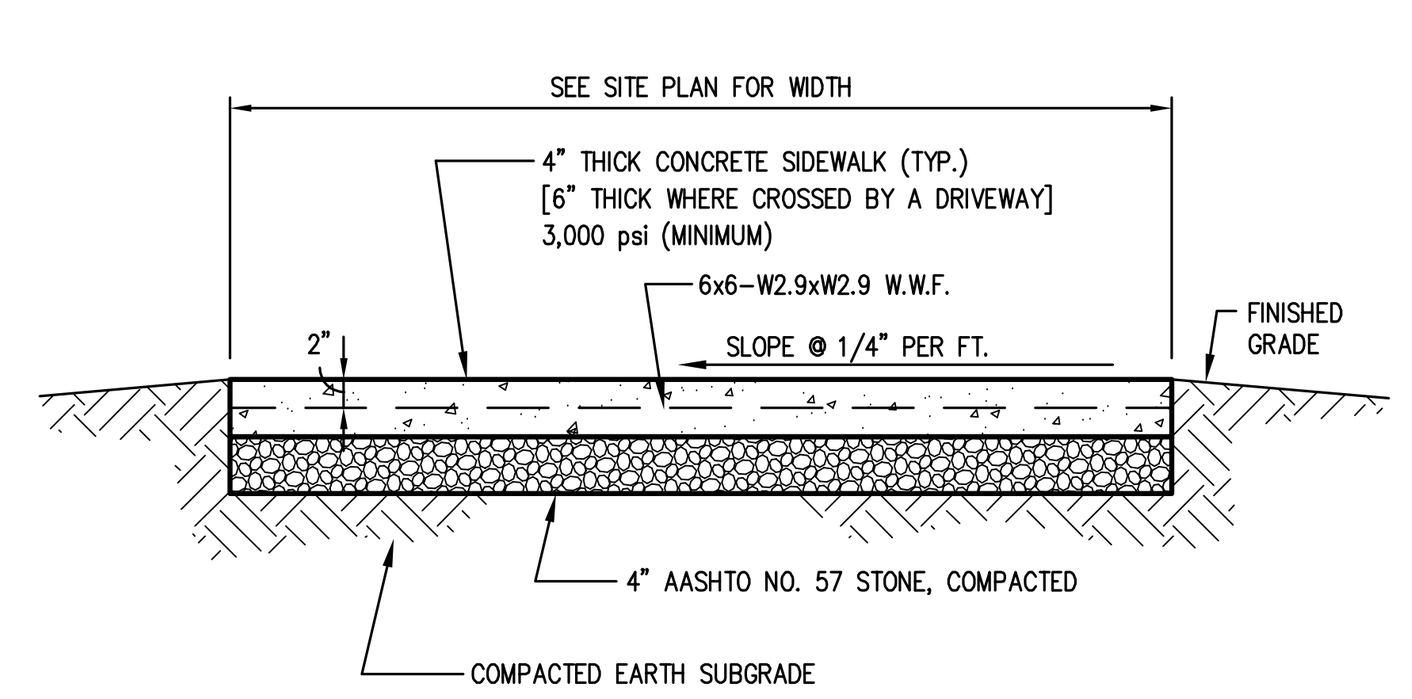

NOTES:
PROVIDE EXPANSION JOINTS @ 20'-0" O.C. (SEE DETAIL)
PROVIDE SCORED CONTROL JOINTS @ 5'-0" O.C. (SEE DETAIL)
ALL CONCRETE IS TO MEET ACI-318 CONSTRUCTION STANDARDS

CONCRETE SIDEWALK DETAIL
NO SCALE

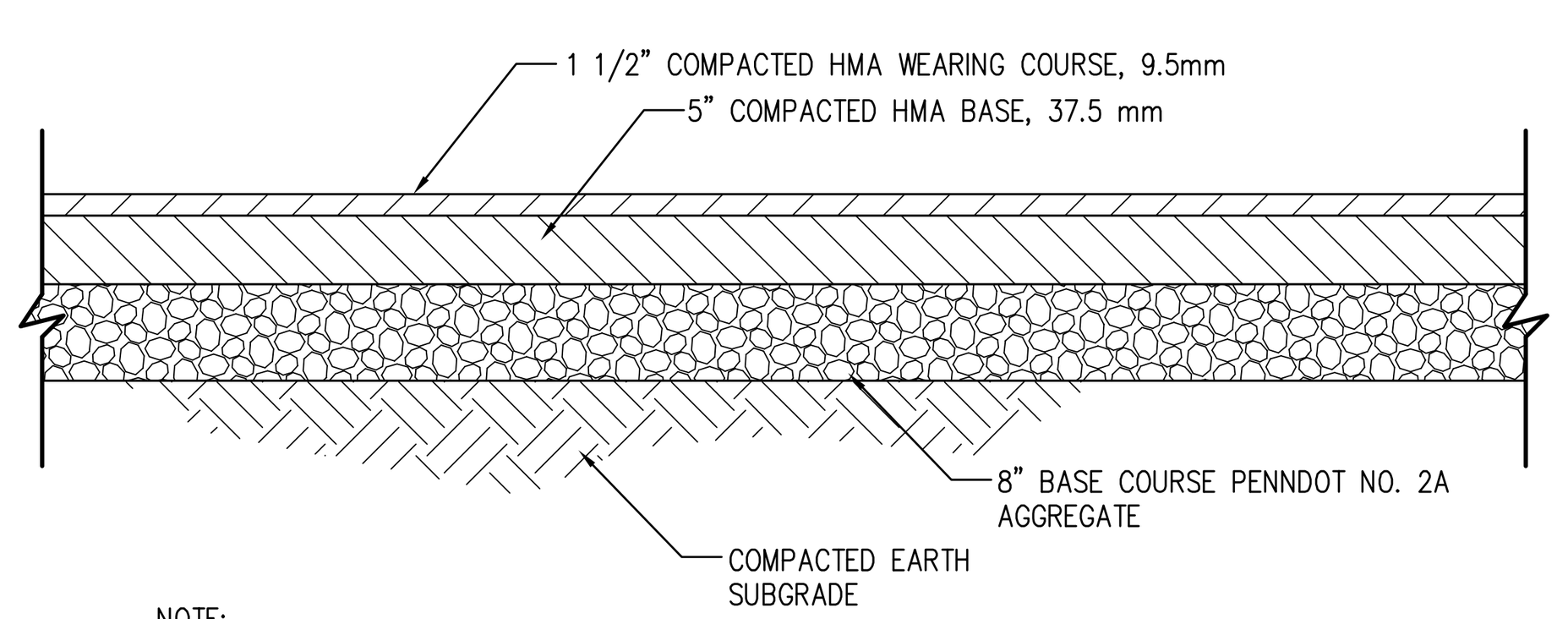

NOTE:
1. DO NOT PAVE OVER WET OR SATURATED SUBGRADE MATERIAL(S).
2. IF SATURATED CONDITIONS ARE ENCOUNTERED, CONTRACTOR SHALL NOTIFY ENGINEER IMMEDIATELY.
3. COMPACT AGGREGATE TO 95% MODIFIED PROCTOR.
4. ALL WORK PROCEDURES AND MATERIALS SHALL CONFORM TO TO THE LATEST EDITION OF THE PENNSYLVANIA DEPARTMENT OF TRANSPORTATION MANUAL 408.

PAVED EMERGENCY ACCESS SECTION
NO SCALE

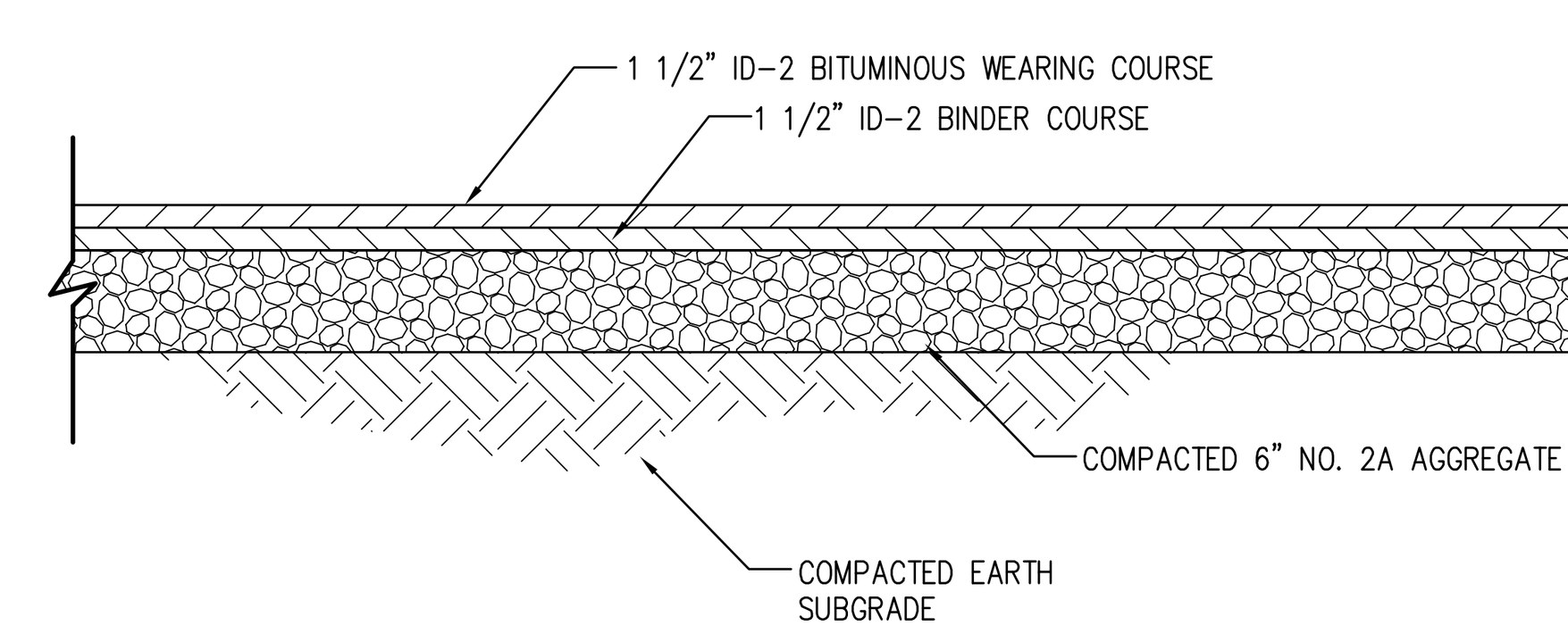

NOTE:
1. DO NOT PAVE OVER WET OR SATURATED SUBGRADE MATERIAL(S).
2. IF SATURATED CONDITIONS ARE ENCOUNTERED, CONTRACTOR SHALL NOTIFY ENGINEER IMMEDIATELY.
3. COMPACT AGGREGATE TO 95% MODIFIED PROCTOR.
4. ALL WORK PROCEDURES AND MATERIALS SHALL CONFORM TO TO THE LATEST EDITION OF THE PENNSYLVANIA DEPARTMENT OF TRANSPORTATION MANUAL 408.

RESIDENTIAL DRIVEWAY
BITUMINOUS PAVING SECTION
NO SCALE

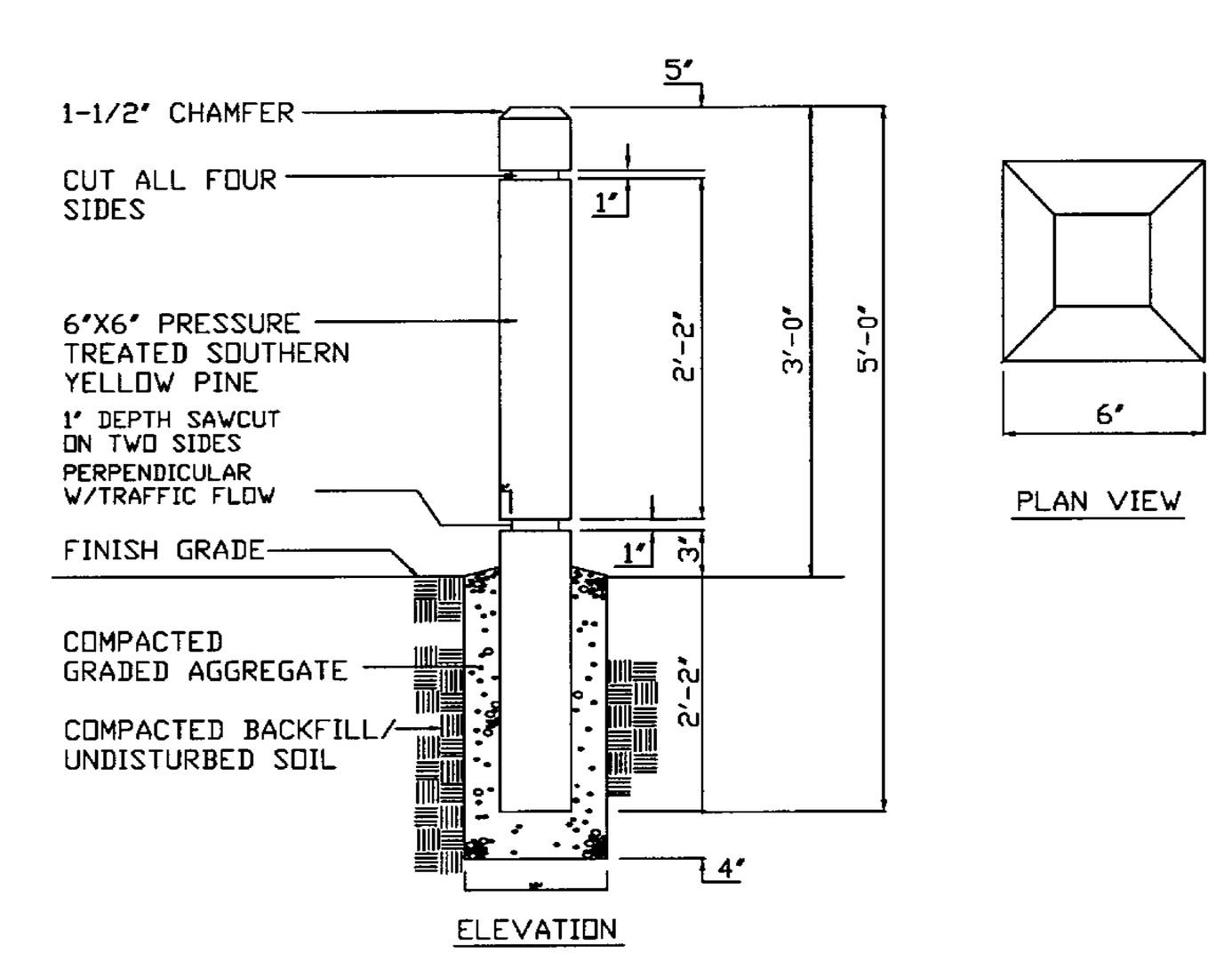

WOODEN BREAKAWAY BOLLARD
NTS

WOODEN BREAKAWAY BOLLARD NOTES:
1. EMERGENCY ACCESSES SHALL HAVE 3 BREAKAWAY BOLLARDS AT EITHER END, SPACED 4' O.C. PER PLANS.
2. NO PARKING SIGNS SHALL BE INSTALLED AT EITHER END OF THE EMERGENCY ACCESSES.

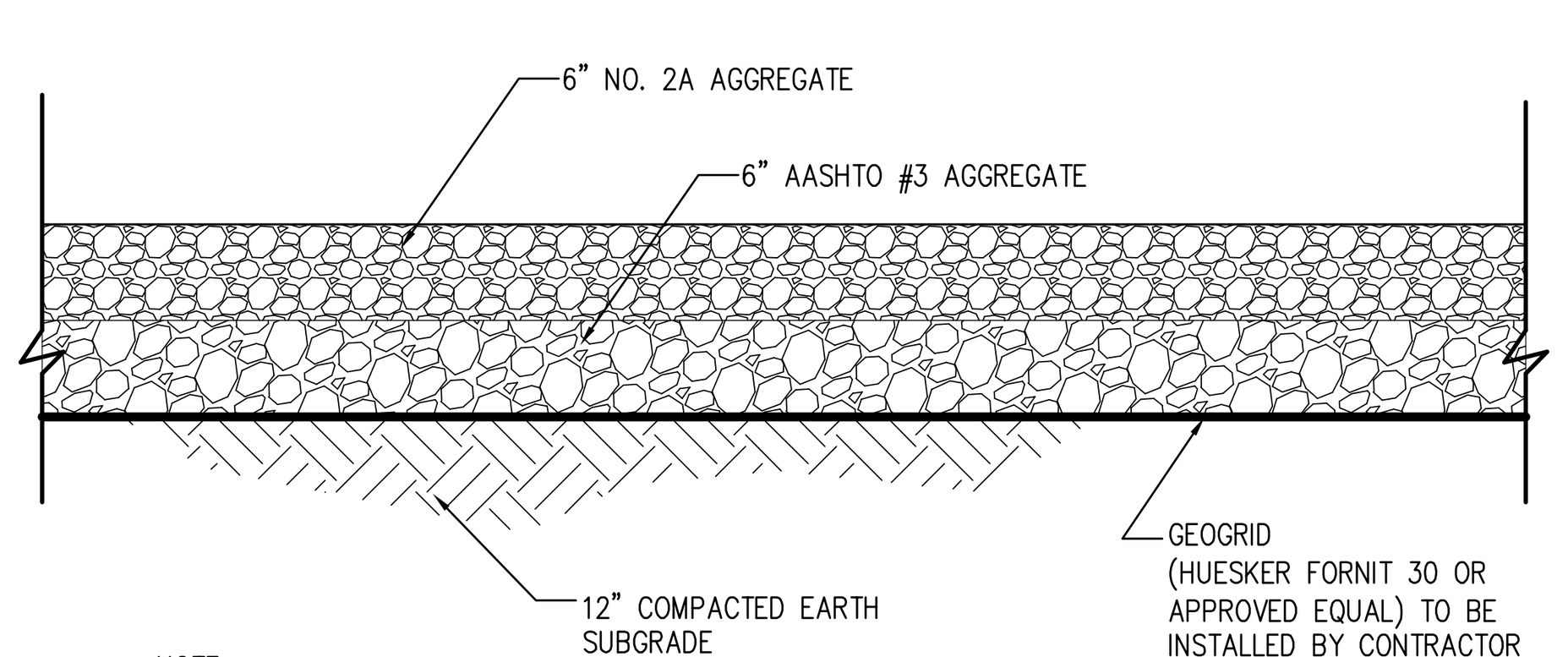

NOTE:
1. DO NOT PAVE OVER WET OR SATURATED SUBGRADE MATERIAL(S).
2. IF SATURATED CONDITIONS ARE ENCOUNTERED, CONTRACTOR SHALL NOTIFY ENGINEER IMMEDIATELY.
3. ROLL/COMPACT AGGREGATE.

GRAVEL EMERGENCY ACCESS SECTION
NO SCALE

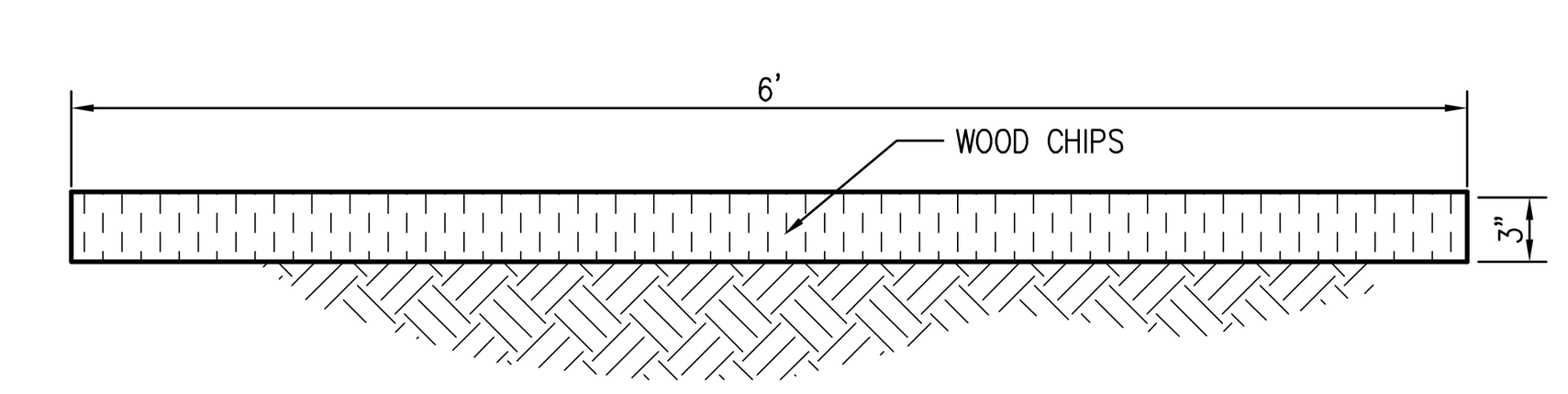

PEDESTRIAN PATH SECTION
NO SCALE

RC-67M STANDARD SHEET 1 NOTES

NOTES

1. PROVIDE MATERIALS AND CONSTRUCTION MEETING THE REQUIREMENTS OF PUBLICATION 408, SECTIONS 350, 409, 630, 676, 694, AND 695.
2. PROVIDE EXPANSION JOINT MATERIAL ½" THICK WHERE CURB RAMP ADJOINS ANY RIGID PAVEMENT, SIDEWALK OR STRUCTURE WITH THE TOP OF JOINT FILLER FLUSH WITH ADJACENT CONCRETE SURFACE.
3. CONSTRUCT CURB RAMPS WITH A MINIMUM 4'-0" X 4'-0" CLEAR SPACE BEYOND THE CURB FACE, WITHIN THE WIDTH OF THE CROSSWALK AND WHOLLY OUTSIDE THE PARALLEL VEHICLE TRAVEL LANE. SEE SHEET 7 FOR CROSSWALK DETAILS.
4. SEAL JOINTS WITH AN APPROVED SEALING MATERIAL.
5. PROVIDE SLIP RESISTANT TEXTURE ON CURB RAMP BY COARSE BROOMING TRANSVERSE TO THE SLOPE OF THE RAMP. EXTEND TEXTURE THE FULL WIDTH AND LENGTH OF THE CURB RAMP INCLUDING SIDE FLARES.
6. MODIFY CONSTRUCTION DETAILS TO ADAPT DIMENSIONS TO EXISTING CURB HEIGHTS WHERE THE CURB IS LESS THAN THE STANDARD 8" HEIGHT.
7. CURB RAMP AND SIDE FLARE LENGTHS ARE VARIABLE AND BASED ON CURB HEIGHT AND THE SIDEWALK SLOPE.
8. TO AVOID CHASING GRADE INDEFINITELY WHEN TRAVERSING THE HEIGHT OF CURB, RAMP LENGTH NOT TO EXCEED 15'-0". ADJUST RAMP SLOPE AS NEEDED TO PROVIDE ACCESS TO THE MAXIMUM EXTENT FEASIBLE.
9. NON-WALK AREA IS AN OBSTRUCTED OR GRASS/NON-PAVED AREA ADJACENT TO THE PEDESTRIAN ACCESS ROUTE THAT IS NOT USED BY THE PEDESTRIAN FOR ACCESS.
10. THE DETAILS DEPICT PEDESTRIAN PUSHBUTTON POLES TO ILLUSTRATE THE RECOMMENDED PLACEMENT OF PEDESTRIAN PUSHBUTTONS. FOR ALTERATION PROJECTS, PROVIDE ACCESS TO EXISTING PEDESTRIAN PUSHBUTTONS TO THE MAXIMUM EXTENT FEASIBLE. INSTALL PEDESTRIAN PUSHBUTTON STUB POLES, WHERE APPLICABLE, SO AS NOT TO CREATE PEDESTRIAN OBSTRUCTIONS.
11. SEE TC-8803 FOR ADDITIONAL PEDESTRIAN PUSHBUTTON DETAILS NOT SHOWN.
12. ALIGN DETECTABLE WARNING SURFACE TRUNCATED DOMES ON A SQUARE GRID IN THE PREDOMINANT DIRECTION OF THE RAMP AND PERPENDICULAR TO CURB. SEE SHEET 9 FOR INSTALLATIONS ALONG CURVED SURFACES.
13. PROVIDE DETECTABLE WARNING SURFACES (DWS) 24" MINIMUM (IN THE DIRECTION OF PEDESTRIAN TRAVEL) ACROSS FULL WIDTH OF RAMP AT THE GRADE BREAK NEAR STREET EDGE. PROVIDE DWS THAT CONTRAST VISUALLY WITH ADJACENT WALKWAY SURFACES, EITHER LIGHT-ON-DARK OR DARK-ON-LIGHT FOR THE FULL WIDTH OF RAMP.
14. FOR NEW CONSTRUCTION, DO NOT EXCEED 2.00% CROSS SLOPE ON THE CURB RAMP OR PEDESTRIAN ACCESS ROUTE.
15. FOR NEW CONSTRUCTION AND ALTERATIONS, CONSTRUCT CURB RAMP AND FLARE SLOPES WITH THE FLATTEST SLOPE POSSIBLE. THE SLOPES INDICATED IN THE DETAILS SHOW THE MAX SLOPE ALLOWABLE. SLOPES THAT EXCEED THOSE INDICATED IN THE DETAILS, OR CONTRACT DOCUMENTS AS APPLICABLE, WILL NOT BE ACCEPTED AND WILL BE RECONSTRUCTED.
16. CONSTRUCT SIDEWALKS AT A LONGITUDINAL SLOPE NOT TO EXCEED 5.00%. FOR ROADWAY PROFILE SLOPES THAT EXCEED 5.00%, CONSTRUCT PARALLEL SIDEWALKS ADJACENT TO ROADWAY AT A LONGITUDINAL SLOPE NOT TO EXCEED ROADWAY PROFILE SLOPE.
17. THE CHANGE IN GRADE AT THE BOTTOM OF THE CURB RAMP AND ADJOINING ROAD SURFACE IS NOT TO EXCEED AN ALGEBRAIC DIFFERENCE OF 13.33%. THE COUNTER SLOPE OF THE GUTTER OR ROAD AT THE FOOT OF A CURB RAMP, TURNING SPACE OR BLENDED TRANSITION IS NOT TO EXCEED 5.00%. SEE SHEET 8 FOR DETAILS.
18. THE CONSTRUCTION STANDARDS DEPICTED ARE MOST APPROPRIATE FOR NEW CONSTRUCTION. ALL CONSTRUCTION MUST MEET THE STANDARDS CONTAINED HEREIN UNLESS OTHERWISE NOTED OR DIRECTED.
19. ALL SLOPES ARE MEASURED WITH RESPECT TO A LEVEL PLANE. THEREFORE, THE LENGTH OF RAMP IS NOT SOLELY DEPENDANT ON THE HEIGHT OF CURB. (FOR EXAMPLE, A 6" CURB DOES NOT NECESSARILY MEAN A RAMP LENGTH OF 6'-0" FOR A 12:1 SLOPE.
20. SIDEWALK WIDTH MAY BE REDUCED TO 4'-0", WHEN PASSING AREAS 5'-0" X 5'-0" ARE PROVIDED EVERY 200'.
21. THE TRAVEL LANE IS DEFINED BY THE OUTSIDE EDGE OF THE WHITE PAVEMENT MARKING LINE. IF A WHITE PAVEMENT MARKING LINE DOES NOT EXIST, THE TRAVEL LANE IS DEFINED BY THE CONTRACT DOCUMENTS.
22. CONSTRUCT DEPRESSED CURB FOR CURB RAMPS FLUSH TO ADJACENT ROADWAY. GRADE EDGE OF ROAD ELEVATIONS AT THE FLOW LINE TO ENSURE POSITIVE DRAINAGE AND PREVENT PONDING. FOR LEVEL TURNING SPACES BEHIND DEPRESSED CURB, ADJUST SLOPES TO PROVIDE POSITIVE DRAINAGE. AT THE JOINT BETWEEN DEPRESSED CURB AND ROADWAYS, REMOVE EXCESS JOINT SEALER AND COVER THE SEALED AREA WITH A LIGHT APPLICATION OF DRY SAND.
23. CHEEK WALLS ARE PERMITTED WHEN ADJACENT TO NON-WALK AREAS OR ELEVATION DIFFERENCES CANNOT BE ACCOMMODATED BY FLARES OR GRADING. GRADE GRASS AREAS OR OTHER NON-WALK AREAS AT 3:1 OR FLATTER. DO NOT INSTALL CHEEK WALLS THAT INTERSECT THE PEDESTRIAN PATH.
24. CONSTRUCT TOP OF PLAIN CEMENT CONCRETE DEPRESSED CURB TO BE FLUSH WITH ADJACENT SURFACES (RAMPS, SIDEWALKS, FLARES).
25. FOR CURB RAMPS THAT LEAD TO A SINGLE CROSSWALK, THE RAMP (EXCLUDING FLARES) TO BE FULLY INSIDE OF MARKED CROSSWALK LINES. SEE SHEET 7 FOR DETAILS.
26. A 4'-0" MAXIMUM DIGITAL DISPLAY LEVEL WILL BE USED TO VERIFY THE SLOPES OF CURB RAMPS AND SIDEWALKS.
27. INSTALL DUMMY JOINTS WHERE RAMPS, TURNING SPACES, FLARES, AND SIDEWALKS ABUT.
28. CONSTRUCT DEPRESSED CURB SLOPE TO MATCH ROADWAY PROFILE AND HAVE A FLUSH CONNECTION. TRANSITION CURB RAMP CROSS SLOPE TO MATCH ROADWAY PROFILE AS GRADUALLY AS POSSIBLE. DO NOT EXCEED 3.00% PER 1'-0" CROSS SLOPE RATE OF CHANGE WHEN TRANSITIONING TO ROADWAY PROFILE.
29. DO NOT SCORE OR MAKE GROOVES ON SLOPED SURFACES. LINES SHOWN ON DETAILS ARE FOR ILLUSTRATION ONLY. SEE NOTE 5.

architecture
engineering
landscape architecture
planning
surveying

melham
ASSOCIATES, PC

2247 North Front Street
Harrisburg, PA 17110

tel 717 238 5000

fax 717 236 2600
www.melham.com

[redacted]

CLIENT

Estate of
Martha Joan Banzhoff
c/o Harry G. Banzhoff,
Executor

2308 STUMPSTOWN ROAD
MECHANICSBURG, PA 17055
(717) 691-5572

PROJECT

Banzhoff Tract

UPPER ALLEN TOWNSHIP, CUMBERLAND COUNTY, PA

PHASE

PRELIMINARY

DRAWING

GENERAL DETAILS

© 2021 MELHAM ASSOCIATES PC

SCALE

AS SHOWN

[redacted]

JOB #

7680

CADD

7680C-7.dwg

DATE

7/27/21

SHEET

C-7.1

Jul 28, 2021 Z:\Prj-7000\7680\Banzhoff\Pre\dwg\7680C-7.dwg

NOTES:
DO NOT PRUNE EVERGREENS EXCEPT TO REMOVE DAMAGED BRANCHES

THIN BRANCHES AND FOLIAGE (NOT ALL BRANCH TIPS) 1/3, RETAINING NORMAL PLANT SHAPE (EXCEPT EVERGREEN)

REMOVE BURLAP FROM TOP 1/3 OF BALL, OR WITH CONTAINER PLANTS REMOVE NUTS AND SPLIT BALLS

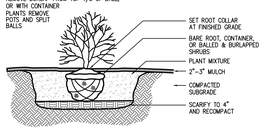

SHRUB PLANTING DETAIL
NO SCALE

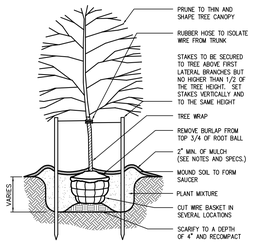

DECIDUOUS TREE PLANTING DETAIL
NO SCALE

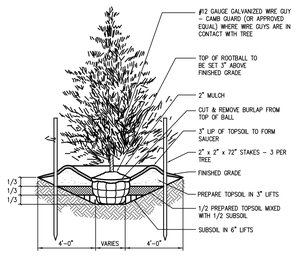

EVERGREEN TREE PLANTING DETAIL
NO SCALE

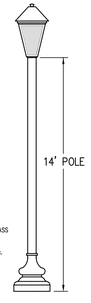

NOTES:
1. STREETLIGHTS SHALL BE PP&L "TRADITIONAL" STYLE AS SPECIFIED AND INSTALLED BY PP&L.
2. POLES SHALL BE 14' ROUND BLACK/GRAY FIBERGLASS AS SPECIFIED AND INSTALLED BY PP&L.
3. LIGHT CUTOFF > 90°; MAXIMUM ILLUMINATION 0.5 fc.

TYPICAL STREETLIGHT
NO SCALE

PROJECT NARRATIVE

THE LANDSCAPING ASSOCIATED WITH THE PROPOSED RESIDENTIAL DEVELOPMENT IS INTENDED TO COMPLIMENT THE DESIGN, MEET THE ORDINANCE REQUIREMENTS OF THE TOWNSHIP, AND UTILIZE VEGETATION THAT IS INDIGENOUS TO THE REGION. THE PROJECT PROPOSES TREES LINING THE STREETS INTENDED TO CREATE A VISUAL FRAMEWORK TO COMPLIMENT THE SCALE OF THE DEVELOPMENT. IN ADDITION, LOWER SHRUBS AND GROUND COVERS PROVIDE AN ATTRACTIVE ENTRANCE TO THE DEVELOPMENT. FLOWERING PLANT MATERIAL AND PLANTS SELECTED FOR THEIR FALL COLOR ARE INTENDED TO PROVIDE SEASONAL INTEREST THROUGHOUT THE GROWING SEASON. PLANT MATERIALS HAVE BEEN SELECTED BASED UPON THEIR NATURAL GROWTH HABITS AND SHOULD BE MAINTAINED AS SELECTIVELY PRUNED PLANTS TO AVOID UNCHARACTERISTIC ROUND OR SHEARED APPEARANCES. LONG-TERM IMPACTS WILL RESULT IN A LANDSCAPE THAT PROVIDES SHADED, ATTRACTIVE STREETS, AND A LOW-MAINTENANCE LANDSCAPING RESULTING IN A BALANCED, INTERESTING VISUAL IMPACT.

SHORT TERM MAINTENANCE

1. THE LANDSCAPE CONTRACTOR SHALL BE RESPONSIBLE FOR WATERING PLANT MATERIAL AND LAWN AREAS BEFORE, DURING AND AFTER INSTALLATION UNTIL ACCEPTANCE OF PLANTINGS BY THE TOWNSHIP AND THE OWNER.
2. NEWLY INSTALLED PLANTING SHALL BE SELECTIVELY PRUNED, IF NECESSARY TO PROVIDE A NEAT, UNIFORM APPEARANCE. ANY DEAD OR BROKEN BRANCHES SHALL BE REMOVED. ALL NOTICEABLY DISEASED OR DAMAGED PLANT MATERIAL SHALL BE REMOVED AND REPLACED PRIOR TO FINAL ACCEPTANCE.
3. NEW LAWN AREAS SHALL BE MAINTAINED BY THE LANDSCAPE CONTRACTOR UNTIL FINAL ACCEPTANCE.
4. ALL GUYING AND STAKING SHALL BE MAINTAINED REGULARLY TO ASSURE PLANT STABILIZATION AND STRAIGHT, UNIFORM GROWTH FOR AT LEAST THE FIRST YEAR FOLLOWING THE DATE OF PLANTING.
5. LAWN AREA SHALL BE WATERED ONCE WEEKLY DURING DRY PERIODS OF THE FIRST GROWING SEASON TO ESTABLISH A HEALTHY TURFGRASS. WATERING SHOULD OCCUR DURING THE EARLY PART OF THE DAY TO AN EVEN SATURATION DEPTH OF ONE INCH.
6. NEWLY PLANTED TREES AND SHRUBS SHALL BE WATERED REGULARLY DURING THE DRY PERIODS TO COMPLETELY SATURATE THE ROOT BALL DURING THE FIRST GROWING SEASON.
7. DISEASE, INSECT AND WEED CONTROL AND PREVENTION SHOULD BE PERFORMED IN ACCORDANCE WITH MANUFACTURERS RECOMMENDATIONS FOR NEWLY PLANTED LANDSCAPES DURING THE FIRST SEASON.
8. ALL PLANT MATERIAL SHALL BE TRUE TO SPECIES AND VARIETY AND SHALL CONFORM TO MEASUREMENTS AND MINIMUM STANDARDS AS SET FORTH IN THE PLANT SCHEDULE.
9. ALL PLANT MATERIAL IS TO BE GUARANTEED FOR A PERIOD OF ONE (1) YEAR FROM DATE OF INSTALLATION AND THE ACCEPTANCE BY THE TWP. AND THE OWNER.

LONG TERM MAINTENANCE (BY OWNER)

1. ANNUAL LANDSCAPE MAINTENANCE SHALL BE PERFORMED BY A QUALIFIED LANDSCAPE CONTRACTOR KNOWLEDGEABLE IN PRUNING TECHNIQUES, FERTILIZER APPLICATION, PEST CONTROL AND LAWN CARE.
2. THE OWNER SHALL BE RESPONSIBLE FOR REGULAR MOWING OF ALL LAWN AREAS.
3. ANY PLANT MATERIAL SHOWN ON THE APPROVED LANDSCAPE PLAN, WHICH DOES NOT SURVIVE OR IS DAMAGED, SHALL BE REPLACED IN KIND BY THE OWNER WITHIN A SIX MONTH PERIOD.

GENERAL LANDSCAPE NOTES (BY LANDSCAPE CONTRACTOR)

1. THE CONTRACTOR SHALL DETERMINE THE LOCATION OF ALL UTILITIES AND SHALL ASSUME RESPONSIBILITY FOR DAMAGES TO UTILITIES AND PROPERTY AS A RESULT OF HIS WORK.
2. PLANT MATERIAL SHALL BE TRUE TO SPECIES AND VARIETY AND SHALL CONFORM TO MEASUREMENTS AND MINIMUM STANDARDS AS SET FORTH IN THE PLANT SCHEDULE.
3. ALL PLANT MATERIAL IS TO BE GUARANTEED FOR A PERIOD OF ONE (1) YEAR FROM DATE OF INSTALLATION AND ACCEPTANCE BY THE TWP. AND THE OWNER.
4. ALL PLANTING BEDS ARE TO BE MULCHED WITH A MINIMUM OF 2" OF SHREDDED AGED HARDWOOD BARK MULCH.
5. THE CONTRACTOR IS TO PROVIDE ADDITIONAL TOPSOIL AS NEEDED FOR PLANTING OPERATIONS.
6. ALL TREES ARE TO BE STAKED AND GUYED ACCORDING TO THE PLANTING DETAILS AND ACCEPTED PROFESSIONAL NURSERYMAN'S STANDARDS. TREES WITH LESS THAN A 3" CALIPER SHALL BE PROPERLY STAKED AND MORE THAN A 3" CALIPER PROPERLY GUYED.
7. THE CONTRACTOR SHALL REMOVE WIRE BASKETS AND NYLON BURLAP OR ROPE FROM THE ROOT BALL OF ALL PLANT MATERIAL.
8. APPLY A 50/50 MIX OF CHIPCO RONSTAR 6 AND PENNANT 56 TO SOIL SURFACE IN MULCHED AREAS PRIOR TO MULCHING. APPLY AT A RATE OF 7 POUNDS PER 1000 SF.
9. PLACE "WEED BLOCK" WATER PERMEABLE FILTRATION FABRIC UNDER MULCHED AREAS EXCEPT FOR AREAS OF GROUND COVER (I.E. IVY, VINCA) AND ANY PERENNIAL BEDS.
10. LANDSCAPE CONTRACTOR SHALL COORDINATE HIS/HER WORK WITH ALL OTHER CONTRACTORS ONSITE.
11. ALL AREAS OTHER THAN PLANTING BED AREAS SHALL BE CONSIDERED LAWN AREAS.
12. THE LANDSCAPE CONTRACTOR SHALL BE RESPONSIBLE TO CLEAN AND REMOVE/DISPOSE FROM THE SITE ALL DEBRIS THAT IS A PART OF THE LANDSCAPE CONTRACTOR'S OPERATION.

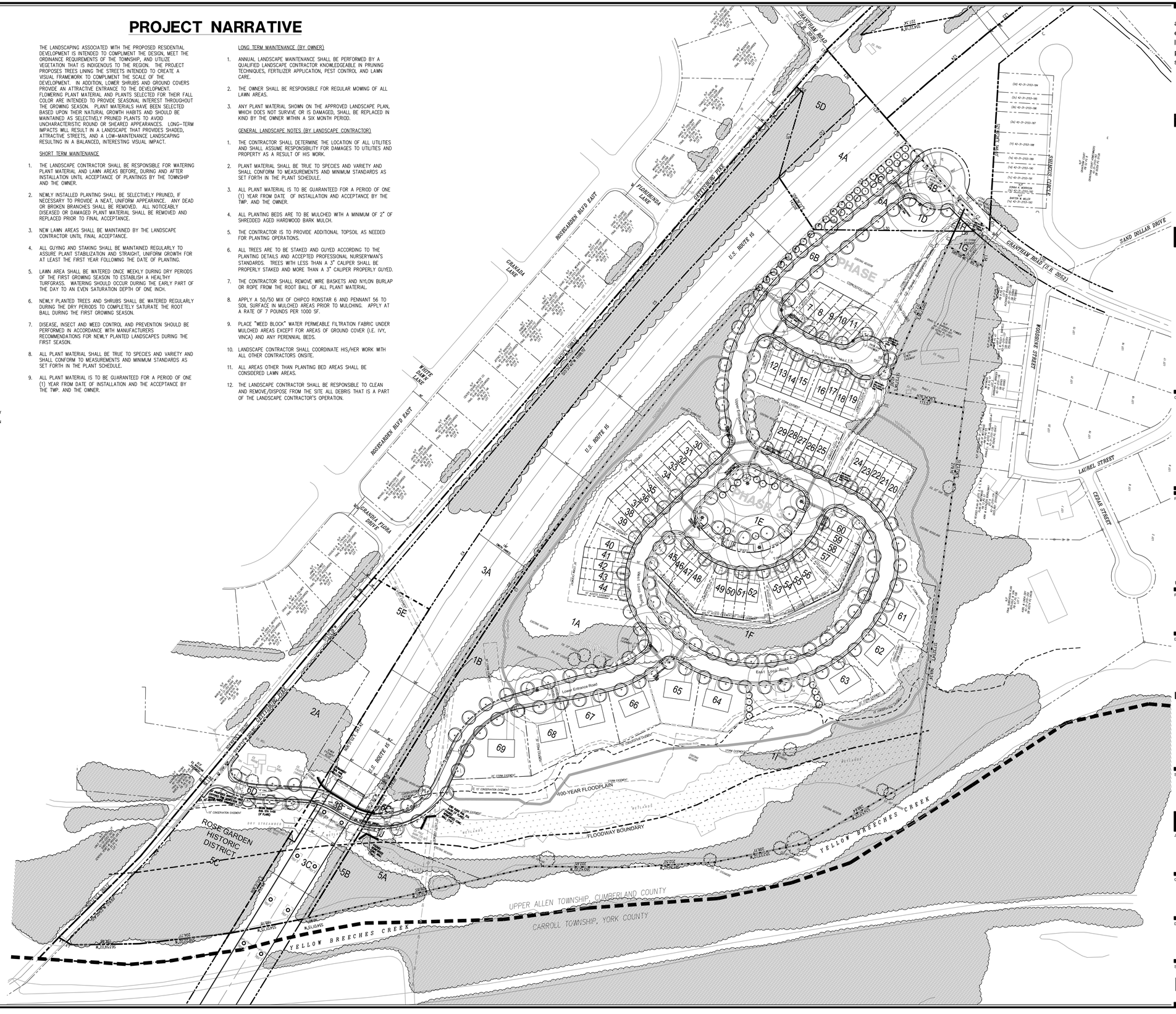

architecture
engineering
landscape architecture
planning
surveying

melham
ASSOCIATES, PC

2247 North Front Street
Harrisburg, PA 17110

tel 717 238 5000

fax 717 236 2600

www.melham.com

0 20 40 60 80 100

CLIENT

Estate of
Martha Joan Banzhoff
c/o Harry G. Banzhoff,
Executor

2308 STUMPSTOWN ROAD
MECHANICSBURG, PA 17055
(717) 691-5572

PROJECT

Banzhoff Tract

UPPER ALLEN TOWNSHIP, CUMBERLAND COUNTY, PA

PHASE

PRELIMINARY

DRAWING

LANDSCAPE AND LIGHTING PLAN

© 2021 MELHAM ASSOCIATES PC

SCALE

1" = 100'

JOB #

7680

CADD

7680L-1.dwg

DATE

7/27/21

SHEET

L-1.0

JULY 28, 2021 - 2:47pm J:\2021\7680\planning\PHASE 1\7680L-1.dwg

	SYMBOL	PLANT NAME	SIZE	ROOT	QUANTITY
	Mh	Malus hupehensis Flowering Crabapple	1 1/2" cal	B&B	3
	Pi	Pinus strobus Eastern White Pine	2 1/2" cal	B&B	30
	Cf	Cornus florida Flowering dogwood	1 1/2" cal	B&B	10
	Pr	Prunus yedoensis Yoshino cherry	1 1/2" cal	B&B	6
	Z	Zelkova serrata Zelkova	2 1/2" cal	B&B	23
	Li	Liriodendron tulipifera Tulip Tree	2 1/2" cal	B&B	37
	Ar	Acer rubrum Red Maple	2 1/2" cal	B&B	37
	Qr	Quercus rubra Red Oak	2 1/2" cal	B&B	38
	Ns	Nyssa sylvatica Blackgum	2 1/2" cal	B&B	22



architecture
engineering
landscape architecture
planning
surveying

melham ASSOCIATES, PC

2247 North Front Street
Harrisburg, PA 17110

tel 717 238 5000

fax 717 236 2600

www.melham.com

0 10 20 30 40 50

CLIENT

Estate of
Martha Joan Banzhoff
c/o Harry G. Banzhoff,
Executor

2308 STUMPSTOWN ROAD
MECHANICSBURG, PA 17055
(717) 691-5572

PROJECT

Banzhoff Tract

UPPER ALLEN TOWNSHIP, CUMBERLAND COUNTY, PA

PHASE

PRELIMINARY

DRAWING

LANDSCAPE AND LIGHTING PLAN
1 OF 2

© 2021 MELHAM ASSOCIATES PC

SCALE

1" = 50'

JOB #

7680

CADD

7680L-1.dwg

DATE

7/27/21

SHEET

L-1.1

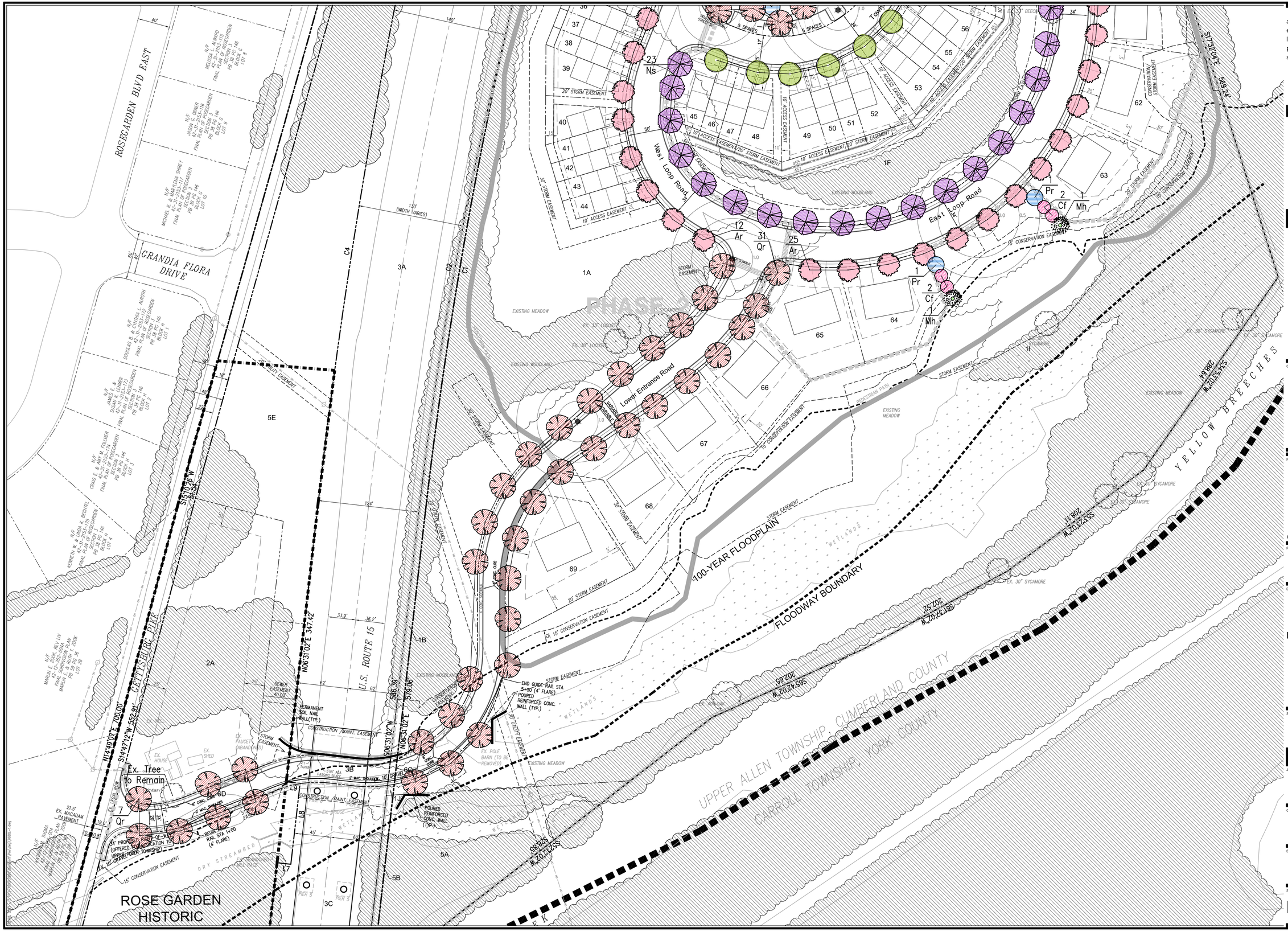

architecture
engineering
landscape architecture
planning
surveying

melham ASSOCIATES, PC

2247 North Front Street
Harrisburg, PA 17110

tel 717 238 5000

fax 717 236 2600

www.melham.com

0 10 20 30 40 50

CLIENT

Estate of
Martha Joan Banzhoff
c/o Harry G. Banzhoff,
Executor

2308 STUMPSTOWN ROAD
MECHANICSBURG, PA 17055
(717) 691-5572

PROJECT

Banzhoff Tract

UPPER ALLEN TOWNSHIP, CUMBERLAND COUNTY, PA

PHASE

PRELIMINARY

DRAWING

LANDSCAPE AND LIGHTING PLAN
2 OF 2

© 2021 MELHAM ASSOCIATES PC

SCALE

1" = 50'

JOB #

7680

CADD

7680L-1.dwg

DATE

7/27/21

SHEET

L-1.2

STANDARD DETAILS

BUILDING SEWER DETAIL

UPPER ALLEN TOWNSHIP

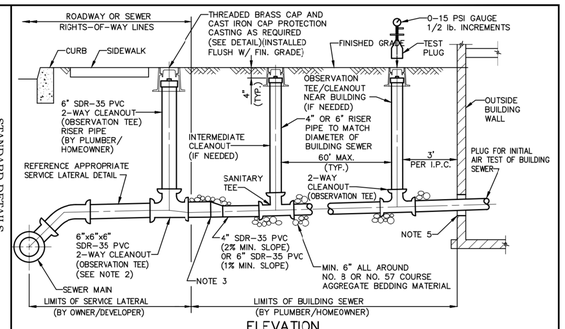

ELEVATION

NOTES:

1. PIPE SIZES AND MATERIALS TO BE IN ACCORDANCE WITH TOWNSHIP REQUIREMENTS.
2. 2-WAY CLEANOUT (OBSERVATION TEE) TO BE LOCATED AT TOWNSHIP R/W LINE AND LOCATION TO BE SITE SPECIFIC WITH RESPECT TO CURB AND SIDEWALK.
3. FOR 4" BUILDING SEWER USE ECCENTRIC 4"x6" ADAPTER FITTING AT TRANSITION TO 2-WAY CLEANOUT (4"x6" FLEXIBLE COUPLING NOT ALLOWED).
4. CLEANOUT/TEST TEE SPACING IS 60' MAXIMUM, UNLESS OTHERWISE APPROVED IN WRITING BY TOWNSHIP.
5. WALL SLEEVE TO BE 2" GREATER THAN DIAMETER OF BUILDING SEWER PIPE AND SEALED WATER TIGHT.
6. ANY PIPE LESS THAN 3 FEET OF COVER SHALL BE APPROVED IN WRITING BY TOWNSHIP.
7. THERE SHALL BE A 10 FOOT HORIZONTAL SEPARATION BETWEEN WATER SERVICE AND SERVICE LATERAL/BUILDING SEWER, OR WATER SERVICE SHALL BE ENCASED IN A WATERTIGHT PVC CONDUIT SEALED AT BOTH ENDS WITH APPROPRIATE FERNCO ADAPTER
8. INSTALL TEST PLUGS AS REQUIRED FOR ACCEPTANCE AIR TESTING.
9. TRAFFIC RATED PROTECTION CASTING REQUIRED IN PAVED AREAS ONLY.
10. DETECTON TAPE REQUIRED IN PIPE TRENCH AT A DEPTH OF 12-INCHES BELOW FINAL SURFACE GRADE OR PAVEMENT SUBGRADE.

SCALE	DATE	REVISIONS
NO SCALE	3/08	
	12/13	DWG. CREATED
	1/17	DWG. UPDATED
		NOTE REVISIONS
DWG. NO.		
LA1-4		

FILE NAME: LA1-4 BUILDING SEWER.DWG

STANDARD DETAILS

TYPICAL GRINDER PUMP INSTALLATION DETAIL - ELEVATION

UPPER ALLEN TOWNSHIP

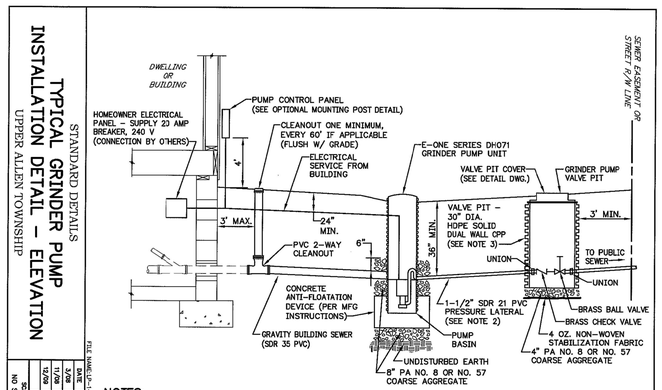

NOTES:

1. SEE E-ONE SERIES DH071 GRINDER PUMP MANUFACTURER'S INSTRUCTIONS FOR TYPICAL OUTDOOR INSTALLATION.
2. CONTINUOUS PE3408/3608 DR 11 (160 PSI) HDPE PRESSURE PIPE (IRON PIPE SIZE) MAY BE USED IN PLACE OF SDR 21 PVC PRESSURE PIPE.
3. VALVE PIT NOT REQUIRED WHEN CONNECTING TO GRAVITY SEWER MAIN.

SCALE	DATE	REVISIONS
NO SCALE	3/08	
	12/13	DWG. CREATED
	1/17	VALVE PIT/NOTE REVISIONS
DWG. NO.		
LP-1		

FILE NAME: LP-1 GRINDER PUMP ELEVATION.DWG

STANDARD DETAILS

TYPICAL GRINDER PUMP INSTALLATION DETAIL - PLAN

UPPER ALLEN TOWNSHIP

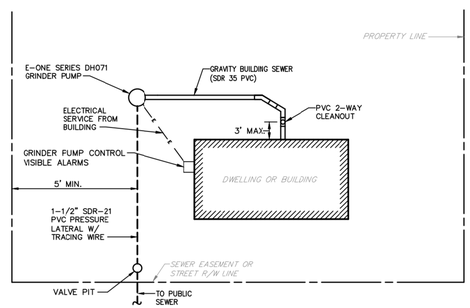

NOTES:

1. ACTUAL PUMP STATION AND LATERAL LOCATIONS MAY VARY. CONTRACTOR TO COORDINATE INSTALLATION LOCATIONS WITH OWNER/TOWNSHIP.
2. CLEANOUT REQUIRED IN LOW PRESSURE SERVICE LATERAL EVERY 100', CONSISTING OF 1-1/2" TEE, SDR21 VERTICAL PIPE AND THREADED CAP (NOT REQUIRED WITH CONTINUOUS DR 11 HDPE PRESSURE PIPE).
3. CONTINUOUS PE3408/3608 DR 11 (160 PSI) HDPE PRESSURE PIPE (IRON PIPE SIZE) MAY BE USED IN PLACE OF SDR 21 PVC PRESSURE PIPE.
4. 24-HR. STABILIZATION PERIOD REQUIRED BEFORE INSTALLING FITTINGS ON BACKFILLED PIPING TO ALLOW FOR EXPANSION/CONTRACTION (1"/100'/10 DEGREE TEMP. CHANGE).
5. VALVE PIT NOT REQUIRED WHEN CONNECTING TO GRAVITY SEWER MAIN, OR WHEN CONNECTING TO A LOW PRESSURE SEWER SYSTEM TWO-WAY IN-LINE CLEANOUT/VALVE PIT WITH SERVICE LINE CHECK VALVE.

SCALE	DATE	REVISIONS
NO SCALE	3/08	
	12/13	DWG. CREATED
	1/17	NOTE REVISIONS
DWG. NO.		
LP-2		

FILE NAME: LP-2 GRINDER PUMP PLAN.DWG

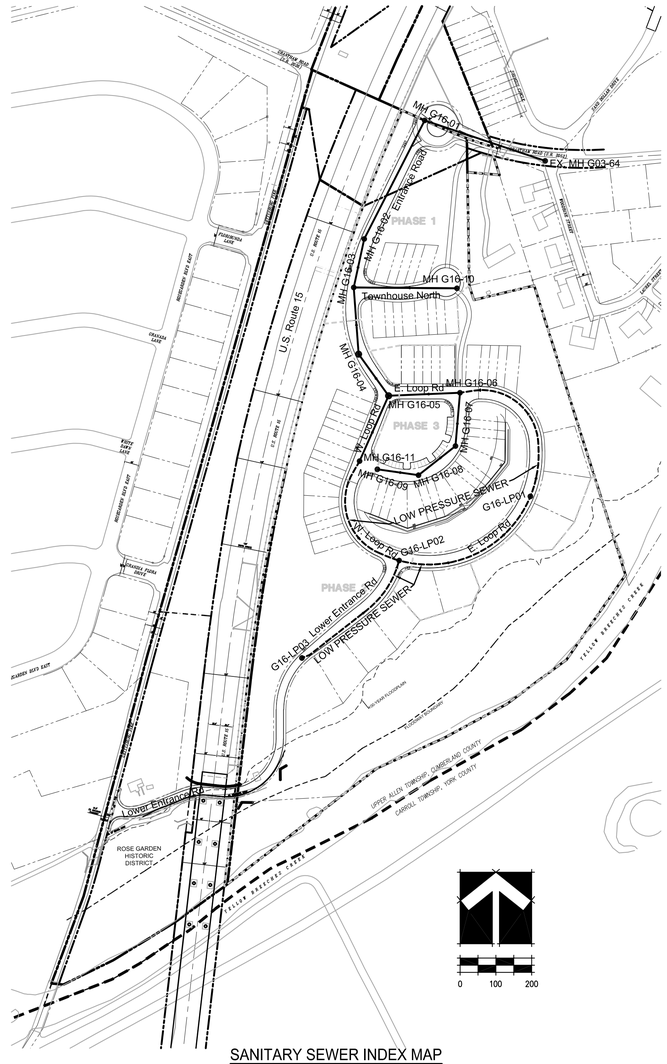

SANITARY SEWER INDEX MAP

SCALE: 1" = 200'

SANITARY SEWER NOTES

1. THE DEVELOPER WILL BE REQUIRED TO COMPLY WITH THE TOWNSHIP STANDARD PLAN APPROVAL CONDITIONS.
2. CONSTRUCTION OF SANITARY SEWERS SHALL COMPLY TO THE LATEST EDITION OF THE UPPER ALLEN TOWNSHIP STANDARD CONSTRUCTION AND MATERIAL SPECIFICATIONS FOR EXTENSIONS TO THE SANITARY SEWER SYSTEM.

MANHOLE COORDINATES

MANHOLE	NORTHING	EASTING
EX. MH G03-64	300268.7614	2176561.9532
MH G16-01	300381.9297	2176225.0319
MH G16-02	300050.6675	2176056.2093
MH G16-03	299914.9890	2176026.9510
MH G16-04	299728.4640	2176040.3982
MH G16-05	299612.1400	2176124.2999
MH G16-06	299620.6400	2176323.9253
MH G16-07	299471.6834	2176311.1937
MH G16-08	299390.0585	2176207.8130
MH G16-09	299406.6935	2176092.9970
MH G16-10	299912.4721	2176315.3422
MH G16-11	299429.5171	2176043.2356
G16-LP01	299330.8008	2176520.5870
G16-LP02	299151.5089	2176153.8922
G16-LP03	298879.0771	2175882.0915

architecture
engineering
landscape architecture
planning
surveying

melham ASSOCIATES, PC

2247 North Front Street
Harrisburg, PA 17110

tel 717 238 5000

fax 717 236 2600

www.melham.com

CLIENT

Estate of
Martha Joan Banzhoff
c/o Harry G. Banzhoff,
Executor

2308 STUMPSTOWN ROAD
MECHANICSBURG, PA 17055
(717) 691-5572

PROJECT

Banzhoff Tract

UPPER ALLEN TOWNSHIP, CUMBERLAND COUNTY, PA

PHASE

PRELIMINARY

DRAWING

SANITARY SEWER DETAILS
SHEET 1 OF 4

© 2021 MELHAM ASSOCIATES PC

SCALE

AS SHOWN

JOB #

7680

CADD

7680S-1.dwg

DATE

7/27/21

SHEET

S-1.1

Jul 28, 2021 - 2:47pm - I:\2021\7680\Engineering\Plans\7680S-1.dwg

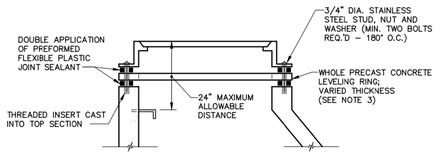

SECTION

NOTES:

1. NO CEMENT GROUTING BETWEEN MANHOLE, LEVELING RINGS AND FRAME, OR ON INSIDE OR OUTSIDE OF MANHOLE PERMITTED. SEALING WITH APPLICATION OF HIGH BUILD EPOXY COATING PERMITTED (SIKA GUARD 62 OR APPROVED EQUAL).
2. RUBBER ADJUSTMENT RISERS PERMITTED FOR PAVED AREAS AND MAY BE TAPERED FOR STREET GRADE ADJUSTMENT.
3. 3/4" DIA. STAINLESS STEEL EXPANSION ANCHOR BOLTS MAY BE USED IN PLACE OF THREADED STUDS AND INSERTS.

FILE NAME:MH-9-LEV-RINGS-BOLTED-FRAME.DWG

STANDARD DETAILS

LEVELING RINGS AND BOLTED FRAME DETAILS

UPPER ALLEN TOWNSHIP

DATE	REVISIONS
3/08	DWG. CREATED
12/13	DWG. UPDATED
12/16	NOTE REVISIONS
SCALE: NO SCALE	DWG. NO.: MH-9

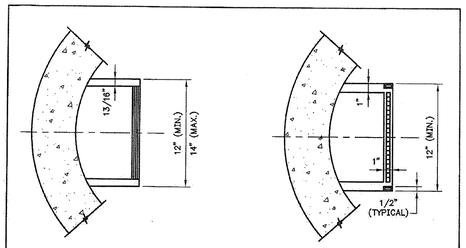

STANDARD DETAILS

MANHOLE STEPS

UPPER ALLEN TOWNSHIP

FILE NAME:MH-10-STEPS.DWG

DATE	REVISIONS
3/08	DWG. CREATED
SCALE: NO SCALE	DWG. NO.: MH-10

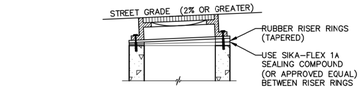

RUBBER RISER RING ADJUSTMENT

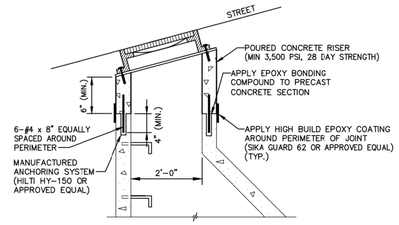

SECTION

POURED CONCRETE ADJUSTMENT RISER

FILE NAME:MH-11-RISER-STEEP-SLOPE.DWG

STANDARD DETAILS

MANHOLE ADJUSTMENT RISERS FOR STREET GRADES OF 2% OR GREATER

UPPER ALLEN TOWNSHIP

DATE	REVISIONS
3/08	DWG. CREATED
11/08	RUBBER RISER REVISION
12/16	NOTE REVISIONS
SCALE: NO SCALE	DWG. NO.: MH-11

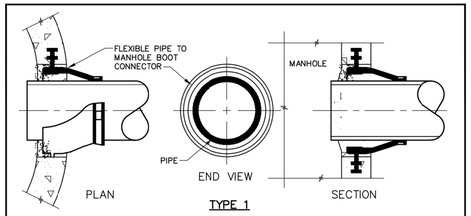

TYPE 1

RUBBER GASKET CAST INTO PRECAST STRUCTURE (A-LOK QUIK-LOK)

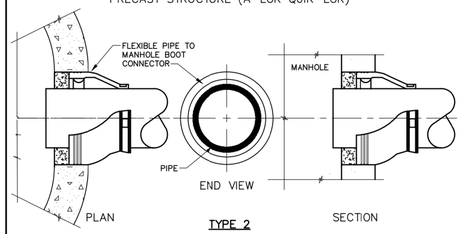

TYPE 2

RUBBER GASKET COMPRESSION RING INSERT FOR PRECAST OR CORED PIPE OPENINGS (TRELLEBORG KOR-N-SEAL)

NOTE:

AFTER PIPE-TO-MANHOLE INSTALLATION, SEAL ANNULAR SPACE AROUND PIPE ON INSIDE OF MANHOLE WITH TYPE II NON-SHRINK CEMENT GROUT. (TYP. OF ALL CONNECTIONS).

FILE NAME:MH-13-PIPE-GASKETS-2.dwg

STANDARD DETAILS

MANHOLE PIPE GASKETS

UPPER ALLEN TOWNSHIP

DATE	REVISIONS
3/08	DWG. CREATED
12/13	DWG. UPDATED
1/17	DWG. UPDATED
SCALE: NO SCALE	DWG. NO.: MH-13

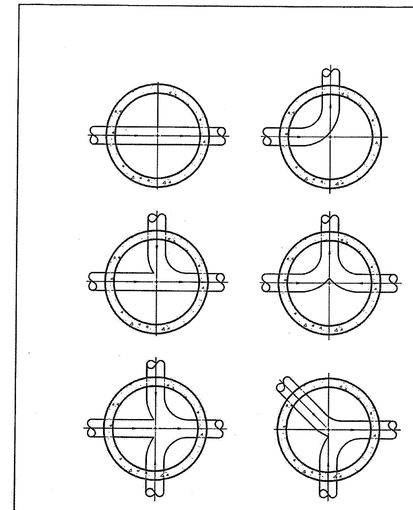

STANDARD DETAILS

TYPICAL PLAN OF MANHOLE CHANNELS

UPPER ALLEN TOWNSHIP

FILE NAME:MH-15-CHANNELS.DWG

DATE	REVISIONS
3/08	DWG. CREATED
SCALE: NO SCALE	DWG. NO.: MH-15

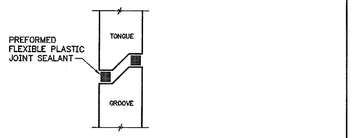

SECTION

FILE NAME:MH-14-SEAL.DWG

STANDARD DETAILS

MANHOLE SECTION JOINT SEAL

UPPER ALLEN TOWNSHIP

DATE	REVISIONS
3/08	DWG. CREATED
SCALE: NO SCALE	DWG. NO.: MH-14

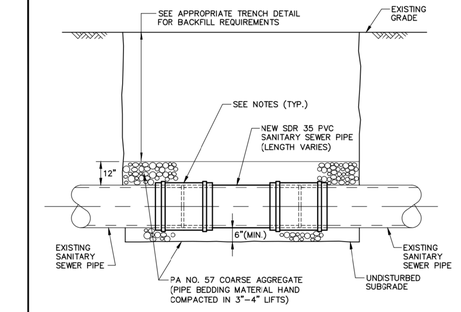

NOTES:

1. SLEEVES, ADAPTERS AND COUPLINGS.
   A. PVC TO PVC CONNECTION USE; GASKETED PVC REPAIR SLEEVE.
   B. PVC TO TCP/VCP CONNECTION; USE FERNCO STAINLESS STEEL ANTI-SHEAR COLLAR RUBBER ADAPTER, OR APPROVED EQUAL.
   C. PVC TO DIP/CIP CONNECTION; USE MECHANICAL JOINT COUPLING.
   D. PVC/DIP TO ACP CONNECTION; USE MECHANICAL JOINT COUPLING OR STAINLESS STEEL ANTI-SHEAR COLLAR RUBBER ADAPTER, AS APPROVED BY TOWNSHIP.
   E. DIP/CIP TO DIP/CIP CONNECTION; USE MECHANICAL JOINT COUPLING.
2. MECHANICAL JOINT COUPLINGS TO BE SMITH-BLAIR, DRESSER, OR APPROVED EQUAL.
3. RECONNECTIONS TO BE AIR TESTED IN ACCORDANCE WITH SPECIFICATIONS OR AS DIRECTED BY TOWNSHIP.

FILE NAME:SEWER-2-PIPE-RECONNECTION.DWG

STANDARD DETAILS

PIPE REPAIR/RECONNECTION DETAIL

UPPER ALLEN TOWNSHIP

DATE	REVISIONS
3/08	DWG. CREATED
12/09	GENERAL REVISIONS
12/13	DWG. UPDATED
1/17	NOTE REVISIONS
SCALE: NO SCALE	DWG. NO.: SEW-2

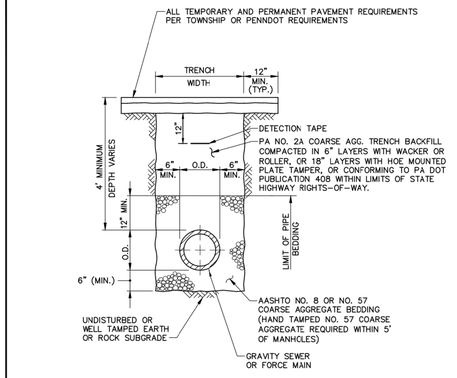

NOTE:

1. BACKFILL AND COMPACTION REQUIREMENT APPLIES TO PAVED ROADWAYS AND SHOULDERS OF PROPOSED AND EXISTING STREETS (OTHER THAN STATE HIGHWAYS), PAVED DRIVEWAYS, AND SIDEWALKS.

FILE NAME:TRENCH-1-PAVED.DWG

STANDARD DETAILS

TRENCH BACKFILL DETAIL IN PAVED AREAS

UPPER ALLEN TOWNSHIP

DATE	REVISIONS
3/08	DWG. CREATED
12/13	DWG. UPDATED
1/17	NOTE REVISIONS
SCALE: NO SCALE	DWG. NO.: TR-1

architecture
engineering
landscape architecture
planning
surveying

melham ASSOCIATES, PC

2247 North Front Street
Harrisburg, PA 17110

tel 717 238 5000

fax 717 236 2600

www.melham.com

CLIENT

Estate of
Martha Joan Banzhoff
c/o Harry G. Banzhoff,
Executor

2308 STUMPSTOWN ROAD
MECHANICSBURG, PA 17055
(717) 691-5572

PROJECT

Banzhoff Tract

UPPER ALLEN TOWNSHIP, CUMBERLAND COUNTY, PA

PHASE

PRELIMINARY

DRAWING

SANITARY SEWER DETAILS
SHEET 2 OF 4

© 2021 MELHAM ASSOCIATES PC

SCALE

AS SHOWN

JOB #

7680

CADD

7680S-1.dwg

DATE

7/27/21

SHEET

S-1.2

JUL 26, 2021 - 12:27pm - \\MH-1000\1000 Standard Drawings\Sanitary\MH-14.dwg

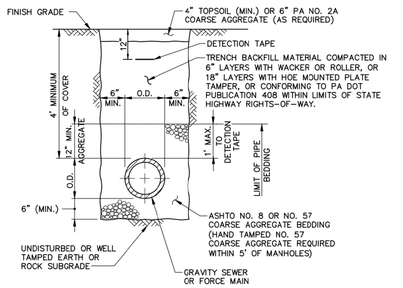

BACKFILLING REQUIREMENTS:

1. UNPAVED AREAS OUTSIDE ROADWAYS – SUITABLE ON-SITE BACKFILL COMPACTED AS INDICATED ABOVE TO BOTTOM OF TOPSOIL. REPLACE TOPSOIL TO APPROXIMATE DEPTH OF EXISTING OR MIN. 4".
2. UNPAVED AREAS WITHIN R/W LIMITS OF STATE HIGHWAYS – CONFORMING TO REQUIREMENTS OF PA DOT PUBLICATION 408.
3. UNPAVED SHOULDERS OF PROPOSED AND EXISTING STREETS OTHER THAN STATE HIGHWAYS – AGGREGATE BACKFILL COMPACTED AS INDICATED ABOVE.
4. STONE DRIVEWAYS AND PARKING AREAS – PA NO. 2A COARSE AGGREGATE BACKFILL COMPACTED AS INDICATED ABOVE.
5. UNIMPROVED STREETS – AGGREGATE BACKFILL COMPACTED AS INDICATED ABOVE.

FILE NAME: TRENCH-2-ROW.DWG

STANDARD DETAILS
TRENCH BACKFILL DETAIL IN UNPAVED AREAS
UPPER ALLEN TOWNSHIP

DATE	REVISIONS
3/08	DWG. CREATED
12/13	DWG. UPDATED
1/17	NOTE REVISIONS
SCALE: NO SCALE	DWG. NO.: TR-2

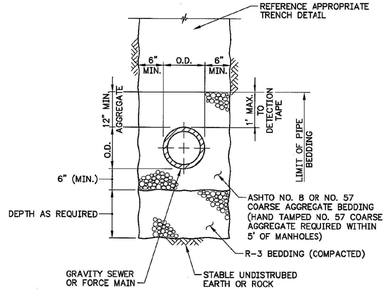

NOTES:

1. IF STABLE UNDISTURBED EARTH OR ROCK UNATTAINABLE, STABILIZATION METHOD TO BE DETERMINED BY ENGINEER.
2. DETECTION TAPE REQUIRED; REFERENCE APPROPRIATE TRENCH DETAIL.

FILE NAME: TRENCH-3-UNE.DWG

STANDARD DETAILS
UNSUITABLE MATERIAL EXCAVATION
UPPER ALLEN TOWNSHIP

DATE	REVISIONS
3/08	DWG. CREATED
12/13	DWG. UPDATED
SCALE: NO SCALE	DWG. NO.: TR-3

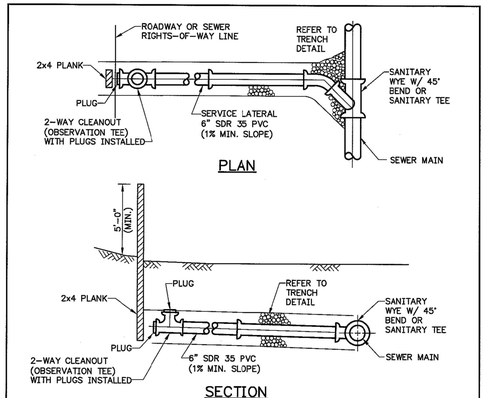

NOTES:

1. 2-WAY CLEANOUT (OBSERVATION TEE) NOT TO BE LOCATED IN SIDEWALK OR BENEATH OTHER CURB LINE UTILITIES.
2. THERE SHALL BE A 10 FOOT HORIZONTAL SEPARATION BETWEEN THE WATER SERVICE AND THE SERVICE LATERAL/BUILDING SEWER.
3. 2-WAY CLEANOUT (OBSERVATION TEE) TO BE LOCATED WITHIN TOWNSHIP R/W AND LOCATION TO BE SITE SPECIFIC WITH RESPECT TO CURB AND SIDEWALK.
4. WHERE OBSERVATION TEE IS NOT REQUIRED, SERVICE CONNECTION SHALL BE EXTENDED TO THE RIGHTS-OF-WAY LINE AND PLUGGED.
5. DETECTION TAPE REQUIRED IN PIPE TRENCH AT A DEPTH OF 12-INCHES BELOW SURFACE GRADE OR PAVEMENT SUBGRADE.

FILE NAME: LAT-1-SHALLOW.DWG

STANDARD DETAILS
SERVICE LATERAL – SHALLOW SEWER
UPPER ALLEN TOWNSHIP

DATE	REVISIONS
3/08	DWG. CREATED
12/13	DWG. UPDATED
SCALE: NO SCALE	DWG. NO.: LAT-1

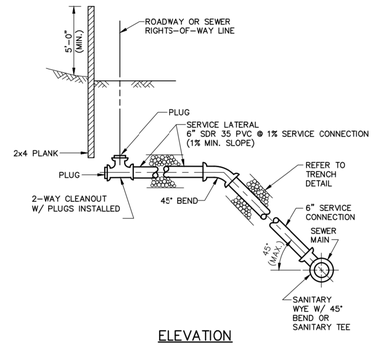

NOTES:

1. 2-WAY CLEANOUT NOT TO BE LOCATED IN SIDEWALK OR BENEATH OTHER CURB LINE UTILITIES.
2. THERE SHALL BE A 10 FOOT HORIZONTAL SEPARATION BETWEEN THE WATER SERVICE AND THE SERVICE LATERAL/BUILDING SEWER.
3. 2-WAY CLEANOUT TO BE LOCATED ON TOWNSHIP R/W AND LOCATION TO BE SITE SPECIFIC WITH RESPECT TO CURB AND SIDEWALK.
4. WHERE 2-WAY CLEANOUT IS NOT REQUIRED, SERVICE CONNECTION SHALL BE EXTENDED TO THE RIGHTS-OF-WAY LINE AND PLUGGED.
5. DETECTION TAPE REQUIRED IN PIPE TRENCH AT A DEPTH OF NO MORE THAN 12-INCHES BELOW FINAL SURFACE GRADE OR PAVEMENT SUBGRADE.
6. 2-WAY CLEANOUTS MAY ALSO BE USED FOR TESTING AND OBSERVATION.

FILE NAME: LAT-2-DEEP.DWG

STANDARD DETAILS
SERVICE LATERAL – DEEP SEWER
UPPER ALLEN TOWNSHIP

DATE	REVISIONS
3/08	DWG. CREATED
12/13	DWG. UPDATED
1/17	DWG./NOTE REVISIONS
SCALE: NO SCALE	DWG. NO.: LAT-2

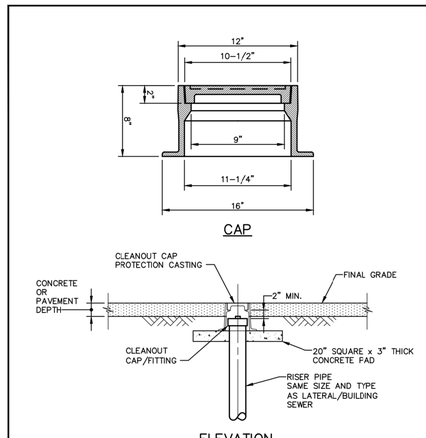

NOTES:

1. CASTING FRAME AND COVER SHALL BE HEAVY DUTY WITH "S" MARKING ON COVER. (EAST JORDAN IRON WORKS CATALOG No. 1565, OR APPROVED EQUAL.)

FILE NAME: LAT-8-CO-CAP.DWG

STANDARD DETAILS
CAP PROTECTION CASTING FOR CLEANOUT COVER IN VEHICULAR TRAFFIC AREAS
UPPER ALLEN TOWNSHIP

DATE	REVISIONS
3/08	DWG. CREATED
1/17	NOTE/TITLE REVISIONS
SCALE: NO SCALE	DWG. NO.: LAT-8

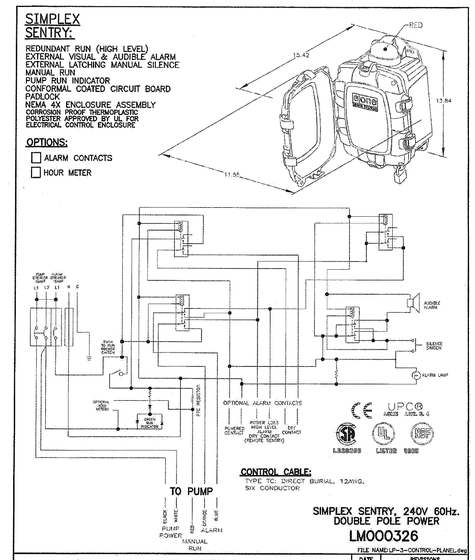

FILE NAME: LP-3-CONTROL-PANEL.dwg

STANDARD DETAILS
E-ONE CONTROL PANEL DETAIL
UPPER ALLEN TOWNSHIP

DATE	REVISIONS
3/08	DWG. CREATED
SCALE: NO SCALE	DWG. NO.: LP-3

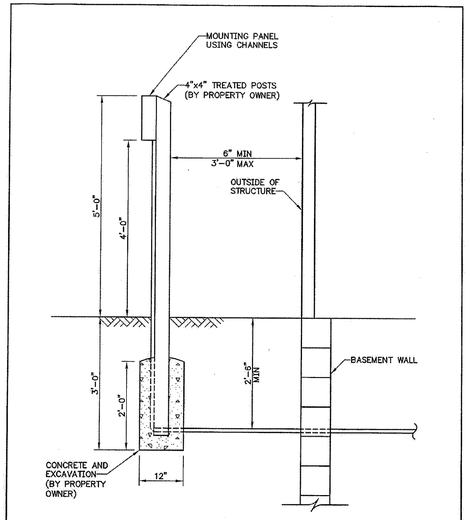

FILE NAME: LP-4-PANEL-MOUNT.dwg

STANDARD DETAILS
CONTROL PANEL OPTIONAL MOUNTING POST
UPPER ALLEN TOWNSHIP

DATE	REVISIONS
3/08	DWG. CREATED
SCALE: NO SCALE	DWG. NO.: LP-4

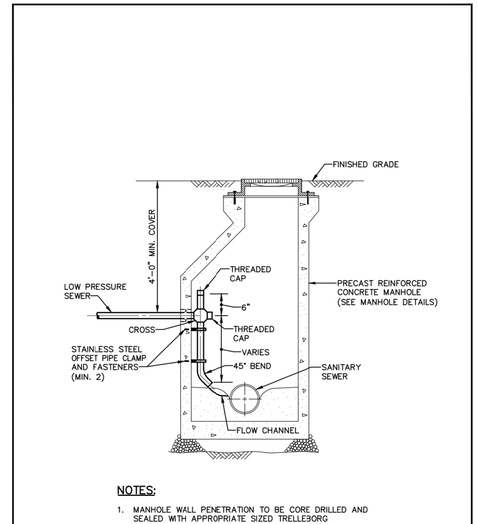

NOTES:

1. MANHOLE WALL PENETRATION TO BE CORE DRILLED AND SEALED WITH APPROPRIATE SIZED TRELLEBORG KOR-N-SEAL PIPE-TO-MANHOLE BOOT CONNECTOR.

FILE NAME: LP-6-LOW-PRES-DISCHG.dwg

STANDARD DETAILS
LOW PRESSURE SEWER DISCHARGE TO MANHOLE
UPPER ALLEN TOWNSHIP

DATE	REVISIONS
3/08	DWG. CREATED
12/13	DWG. UPDATED
1/17	NOTE REVISION
SCALE: NO SCALE	DWG. NO.: LP-6

architecture
engineering
landscape architecture
planning
surveying

melham ASSOCIATES, PC

2247 North Front Street
Harrisburg, PA 17110

tel 717 238 5000

fax 717 236 2600
www.melham.com

CLIENT

Estate of
Martha Joan Banzhoff
c/o Harry G. Banzhoff,
Executor

2308 STUMPSTOWN ROAD
MECHANICSBURG, PA 17055
(717) 691-5572

PROJECT

Banzhoff Tract

UPPER ALLEN TOWNSHIP, CUMBERLAND COUNTY, PA

PHASE

PRELIMINARY

DRAWING

SANITARY SEWER DETAILS
SHEET 3 OF 4

© 2021 MELHAM ASSOCIATES PC

SCALE

AS SHOWN

JOB #

7680

CADD

7680S-1.dwg

DATE

7/27/21

SHEET

S-1.3

AUG 26, 2021 2:21PM - \\MELHAM\DFS\Projects\7680\Drawings\Sanitary Sewer\7680S-1.dwg

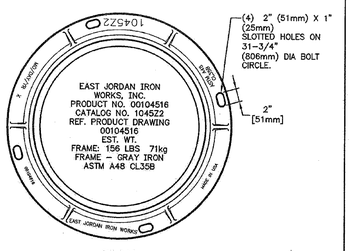

PLAN

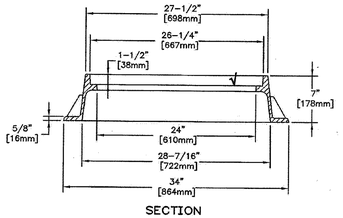

SECTION

√ MACHINED SURFACE

FILE NAME:MH-2-HD-H-25-FRAME.dwg

STANDARD DETAILS
HEAVY DUTY MANHOLE FRAME (H-25)
UPPER ALLEN TOWNSHIP

DATE	REVISIONS
3/08	DWG. CREATED
SCALE NO SCALE	DWG. NO. MH-2

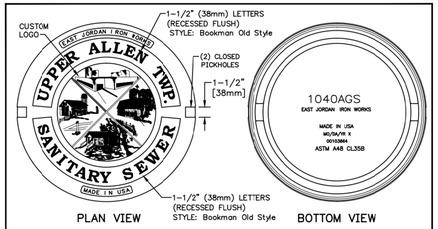

PLAN VIEW BOTTOM VIEW

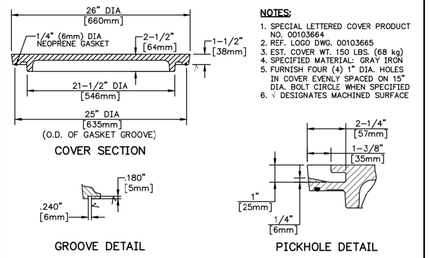

COVER SECTION

GROOVE DETAIL PICKHOLE DETAIL

NOTES:
1. SPECIAL LETTERED COVER PRODUCT NO. 00103664
2. REF. LOGO DWG. 00103665
3. EST. COVER WT. 150 LBS. (68 kg)
4. SPECIFIED MATERIAL: GRAY IRON
5. FURNISH FOUR (4) 1" DIA. HOLES IN COVER EVENLY SPACED ON 15" DIA. BOLT CIRCLE WHEN SPECIFIED
6. √ DESIGNATES MACHINED SURFACE

FILE NAME:MH-1-HD-COVER.DWG

STANDARD DETAILS
HEAVY DUTY MANHOLE SELF-SEALING COVER
UPPER ALLEN TOWNSHIP

DATE	REVISIONS
3/08	DWG. CREATED
12/14	DWG. UPDATED
SCALE NO SCALE	DWG. NO. MH-1

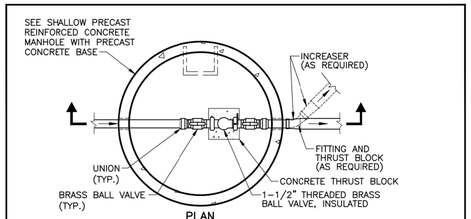

PLAN

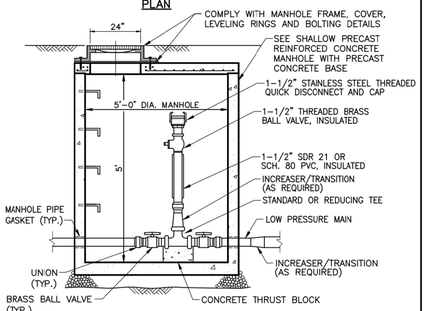

SECTIONAL ELEVATION

FILE NAME:LP-7-IN-LINE-CO-VALVE.DWG

STANDARD DETAILS
IN-LINE CLEANOUT/VALVE PIT FOR LOW PRESSURE SEWER MAIN
UPPER ALLEN TOWNSHIP

DATE	REVISIONS
3/08	DWG. CREATED
12/13	DWG. UPDATED
1/17	DWG. REVISIONS
SCALE NO SCALE	DWG. NO. LP-7

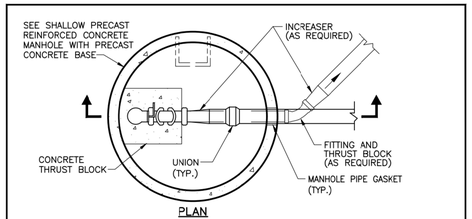

PLAN

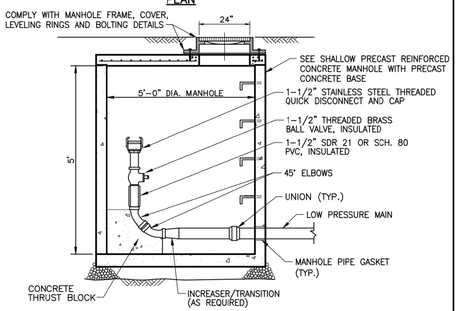

SECTIONAL ELEVATION

FILE NAME:LP-8-IN-LINE-TERM-CO.dwg

STANDARD DETAILS
IN-LINE TERMINAL CLEANOUT FOR LOW PRESSURE MAIN
UPPER ALLEN TOWNSHIP

DATE	REVISIONS
3/08	DWG. CREATED
12/13	DWG. UPDATED
1/17	DWG. REVISIONS
SCALE NO SCALE	DWG. NO. LP-8

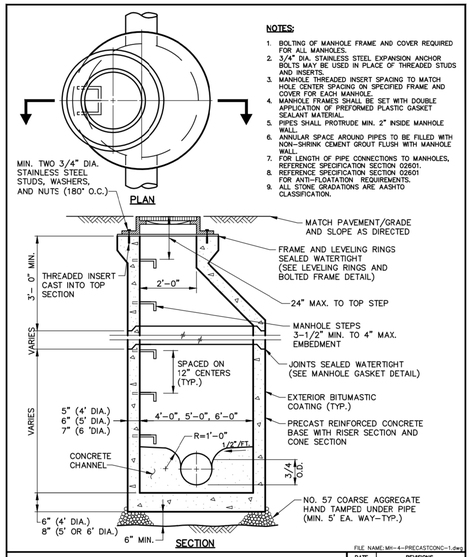

NOTES:
1. BOLTING OF MANHOLE FRAME AND COVER REQUIRED FOR ALL MANHOLES.
2. 3/4" DIA. STAINLESS STEEL EXPANSION ANCHOR BOLTS MAY BE USED IN PLACE OF THREADED STUDS AND INSERTS.
3. MANHOLE THREADED INSERT SPACING TO MATCH HOLE CENTER SPACING ON SPECIFIED FRAME AND COVER FOR EACH MANHOLE.
4. MANHOLE FRAMES SHALL BE SET WITH DOUBLE APPLICATION OF PREFORMED PLASTIC GASKET SEALANT MATERIAL.
5. PIPES SHALL PROTRUDE MIN. 2" INSIDE MANHOLE WALL.
6. ANNULAR SPACE AROUND PIPES TO BE FILLED WITH NON-SHRINK CEMENT GROUT FLUSH WITH MANHOLE WALL.
7. FOR LENGTH OF PIPE CONNECTIONS TO MANHOLES, REFERENCE SPECIFICATION SECTION 02601.
8. REFERENCE SPECIFICATION SECTION 02601 FOR ANTI-FLOATATION REQUIREMENTS.
9. ALL STONE GRADATIONS ARE AASHTO CLASSIFICATION.

FILE NAME:MH-4-PRECASTCONC-1.dwg

STANDARD DETAILS
STANDARD PRECAST CONCRETE MANHOLE WITH PRECAST CONCRETE BASE
UPPER ALLEN TOWNSHIP

DATE	REVISIONS
3/08	DWG. CREATED
12/13	DWG. UPDATED
12/16	NOTE REVISIONS
SCALE NO SCALE	DWG. NO. MH-4

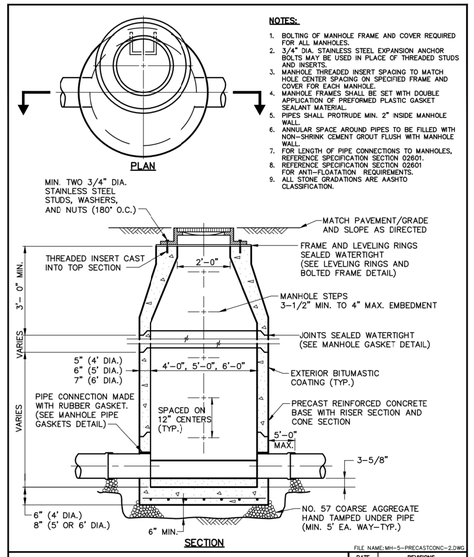

NOTES:
1. BOLTING OF MANHOLE FRAME AND COVER REQUIRED FOR ALL MANHOLES.
2. 3/4" DIA. STAINLESS STEEL EXPANSION ANCHOR BOLTS MAY BE USED IN PLACE OF THREADED STUDS AND INSERTS.
3. MANHOLE THREADED INSERT SPACING TO MATCH HOLE CENTER SPACING ON SPECIFIED FRAME AND COVER FOR EACH MANHOLE.
4. MANHOLE FRAMES SHALL BE SET WITH DOUBLE APPLICATION OF PREFORMED PLASTIC GASKET SEALANT MATERIAL.
5. PIPES SHALL PROTRUDE MIN. 2" INSIDE MANHOLE WALL.
6. ANNULAR SPACE AROUND PIPES TO BE FILLED WITH NON-SHRINK CEMENT GROUT FLUSH WITH MANHOLE WALL.
7. FOR LENGTH OF PIPE CONNECTIONS TO MANHOLES, REFERENCE SPECIFICATION SECTION 02601.
8. REFERENCE SPECIFICATION SECTION 02601 FOR ANTI-FLOATATION REQUIREMENTS.
9. ALL STONE GRADATIONS ARE AASHTO CLASSIFICATION.

FILE NAME:MH-5-PRECASTCONC-2.DWG

STANDARD DETAILS
STANDARD PRECAST CONCRETE MANHOLE WITH PRECAST CONCRETE BASE
UPPER ALLEN TOWNSHIP

DATE	REVISIONS
3/08	DWG. CREATED
12/13	DWG. UPDATED
12/16	NOTE REVISIONS
SCALE NO SCALE	DWG. NO. MH-5

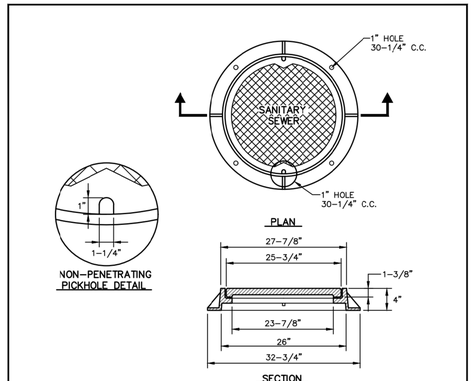

NOTES:
1. MATERIAL SHALL BE GRAY CAST IRON CONFORMING TO ASTM A48 (LATEST REVISION)
2. UNITS TO BE DESIGNED HEAVY DUTY FOR AASHTO HS20-44 WHEEL LOADS IN VEHICULAR TRAFFIC AREAS.
3. EACH FRAME AND COVER SHALL HAVE MACHINED HORIZONTAL BEARING SURFACES.
4. PROPERLY SIZED/DESIGNED POLYETHYLENE COVERS MAY BE SUBSTITUTED FOR CAST IRON COVERS IN NON-VEHICULAR TRAFFIC AREAS.
5. ALL COVERS MUST BE GASKETED AND WATERTIGHT.

FILE NAME:LP-10-VLV-PIT-COV.dwg

STANDARD DETAILS
PRESSURE LATERAL VALVE PIT COVER DETAIL
UPPER ALLEN TOWNSHIP

DATE	REVISIONS
3/08	DWG. CREATED
12/13	DWG. UPDATED
1/17	NOTE REVISIONS
SCALE NO SCALE	DWG. NO. LP-10

ELBOW DIMENSION SCHEDULE											
DIM.	3"-90°	3"-45°	3"-22 1/2°	3"-11 1/4°	2 1/2"-90°	2 1/2"-45°	2 1/2"-22 1/2°	2"-90°	2"-45°	1 1/2"-90°	1 1/2"-45°
A	20"	18"	16"	12"	18"	16"	14"	16"	14"	14"	12"
B	15"	15"	15"	14"	15"	15"	15"	14"	14"	14"	14"

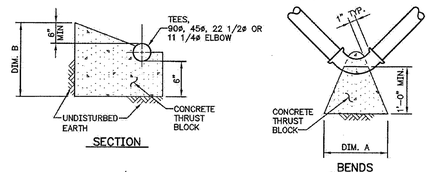

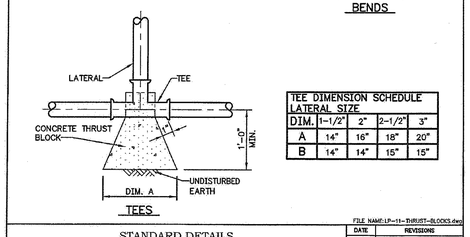

TEE DIMENSION SCHEDULE				
LATERAL SIZE DIM.	1-1/2"	2"	2-1/2"	3"
A	14"	16"	18"	20"
B	14"	14"	15"	15"

FILE NAME:LP-11-THRUST-BLOCKS.dwg

STANDARD DETAILS
CONCRETE THRUST BLOCK DETAILS FOR LOW PRESSURE SEWER MAIN
UPPER ALLEN TOWNSHIP

DATE	REVISIONS
3/08	DWG. CREATED
SCALE NO SCALE	DWG. NO. LP-11

architecture
engineering
landscape architecture
planning
surveying

melham ASSOCIATES, PC

2247 North Front Street
Harrisburg, PA 17110

tel 717 238 5000

fax 717 236 2600
www.melham.com

CLIENT

Estate of
Martha Joan Banzhoff
c/o Harry G. Banzhoff,
Executor

2308 STUMPSTOWN ROAD
MECHANICSBURG, PA 17055
(717) 691-5572

PROJECT

Banzhoff Tract

UPPER ALLEN TOWNSHIP, CUMBERLAND COUNTY, PA

PHASE

PRELIMINARY

DRAWING

SANITARY SEWER DETAILS
SHEET 4 OF 4

© 2021 MELHAM ASSOCIATES PC

SCALE

AS SHOWN

JOB #

7680

CADD

7680S-1.dwg

DATE

7/27/21

SHEET

S-1.4

JOB SIZE: 30" X 42" - 2021 - Z:\P\7600\7680 Banzhoff\PW Library\7680S1.dwg