FINAL SUBDIVISION & LAND DEVELOPMENT PLAN

FOR

AUTUMN CHASE PRD PHASE V

LOCATED IN

UPPER ALLEN TOWNSHIP, CUMBERLAND COUNTY, PA.

INTENT OF PLAN

The intent of this plan is to obtain Final Subdivision Plat approval for "AUTUMN CHASE PHASE V". AUTUMN CHASE is a Planned Residential Development (PRD). The Tentative Planned Residential Development Plan for Autumn Chase was approved by the Upper Allen Township Board of Commissioners as per a written decision dated –May 8, 2012. The Master Plan on plan sheet 2 provides a reference to the overall community. Autumn Chase Phase V consists of 35 single family detached dwelling lots, 1 open space lot and a residual tract. The project shall be implemented in accordance with the Decision Approving Application of Hertzler Road Associates, L.P. for Tentative Approval of Autumn Chase Planned Residential Development dated May 8, 2012. Certain waivers and modifications were granted as part of the Tentative Plan approval. A Developer Agreement, between Hertzler Road Associates, L.P. and Upper Allen Township, dated April 26, 2012, provides for certain Hertzler Road improvements and recreation improvements to satisfy the recreation requirements for Autumn Chase. Hertzler Road shall be improved with the project in accordance with the approved Developers Agreement. See additional notes below and on the Master Development Plan, sheet 2.

SITE DATA

1. Applicant and Equitable Owner:
   Hertzler Road Associates, L.P.
   4400 Deer Path Road, Suite 201
   Harrisburg, PA 17110
   717–234–4000
2. The subject tract consists of two (2) parcels of Land; both tracts are owned by: Hertzler Road Associates, LP (entire project)
   Total Gross Area of both Parcels: 6,209,731 sf or 142.55 ac
   Total Net Area of both Parcels: 6,134,676 sf or 140.83 ac
   Tax Parcel No. 42–11–0272–001
   Instrument #201124513
   Total Gross Area: 5,378,304.8 Sq Ft = 123.47 Ac.
   Total Net Area: 5,303,249.9 Sq Ft = 121.75 Ac.
   Hertzler Road Legal R/W: 75,054.8 Sq Ft = 1.72 Ac.
   Tax Parcel No. 42–11–0274–028
   Instrument #201124513
   Total Gross/Net Area 831,426 sf or 19.087 acres
3. Subject Tract is located in the R–1 (Low Density Residential District) and RL (Rural Living)
   R–1 (Low Density Residential): 5,565,535 sf or 127.77 ac
   RL (Rural Living): 644,196 sf or 14.79 ac
4. Total number of existing dwellings: 78 lots previous Phases I & 3 and 56 dwelling units in Phase II (32 townhouses & 24 duplexes); not all units are built although are approved for construction
5. Total number of proposed dwellings: 295 Total all Phases
   Phase V: 35 single family detached dwelling lots
   Entire Project including Phases I–III: 295 units with the following uses (See Master Plan sheet for Phasing Plan);
   - 161 Single–family dwelling lots (78 North and 83 south of Hertzler Road);
   - 60 Duplex Units;
   - 74 Townhouse Units (7–6plexes and 8–4plexes);
6. Existing Land Use: Agriculture use
7. Proposed Use: Residential "Planned Residential Development"
8. Proposed Density: 1.2 units per acre
9. Proposed Length of New Streets:
   Phase V: 2,550' or 0.483 miles
10. Proposed Length of Hertzler Road Widening: 3,493' total including off site (There are no Hertzler Road improvements associated with this Phase V Plan)
11. Minimum Lot Size Proposed in Phase V: 8,300 sf or 0.19 ac
12. Total Area of Open Space Lots 1 through 9 (see sheet 2):
    Existing Phases I, 2 & 3: 957,082 sf or 21.972 acres
    Phase V: 268,714 sf or 6.17 acres (OS–8)
    Entire Project: 2,851,323 sf or 65.457 ac
13. –

ZONING REQUIREMENTS

Below criteria as approved with the Autumn Chase PRD

Building Setbacks
50' setback from tract perimeter apply's to all of the residential uses; No lot, including Lots 84, 85 & 86, can place any structures within the 50' boundary setback area

Single Family Detached Lots:
Front = 25'
Side = 5'
Rear = 15'

Townhouse & Duplex Units (setback from parent tract)
Front = 25'
Side = 10'
Rear = 15'
*see below for interior yards

*Interior Yard Separations (Rear to rear, side to rear, etc. – Sec. 245–155)
Rear to rear = 40'
Side to rear = 35'
Side to side = 25'

Townhouse & Duplex
Minimum Building setback from sidewalks = 20'
Minimum Front setback from internal street R/W = 20'

Townhouse & Duplex
Minimum Building setback from off street parking = 20'
Maximum Building Height = 35'
Townhouse/Duplex Maximum Building Coverage = 35%
Townhouse/Duplex Maximum Impervious Coverage = 55%

Single Family Detached Max Building Coverage = 30%
Single Family Detached Max Impervious Coverage = 40%

PHASE I RECORDING INFORMAITON

The Final Plat for Autumn Chase PRD Phase I was recorded on October 21, 2021 in Instrument #202135830.

PHASE II RECORDING INFORMAITON

The Final Plat for Autumn Chase PRD Phase II was recorded on July 27, 2023 in Instrument #202314020.

PHASE III RECORDING INFORMAITON

The Final Plat for Autumn Chase PRD Phase III was recorded on September 22, 2022 in Instrument #202226446.

DRAWING INDEX

SHEET NO.	TITLE
1 of 21	COVER SHEET
2 of 21	MASTER DEVELOPMENT PLAN
3 of 21	EXISTING FEATURES PLAN
4–5 of 21	FINAL SUBDIVISION PLAN
6–7 of 21	GRADING AND UTILITY PLAN
8–9 of 21	STREET AND UTILITY PROFILES
10–12 of 21	POST CONSTRUCTION STORMWATER MANAGEMENT PLANS
13 of 21	LANDSCAPE PLAN
14 of 21	LIGHTING PLAN
15–17 of 21	CONSTRUCTION DETAILS
18–21 of 21	EROSION CONTROL PLANS

GENERAL NOTES

1. The applicant shall comply with all Township regulations in effect at the time of the filing of this plan. All proposed improvements shall conform to Upper Allen Township construction standards. All work shall be in accordance with PennDOT Publication 408, Specifications and Publication 72, Roadway Construction Standards, unless otherwise noted. Work zone traffic control shall be in accordance with PennDOT Publication 213.
2. Autumn Chase Phase V consists of 35 Single–family detached lots, 1 Open Space lot (OS–8) and a residual tract.
3. The recreation requirements for Autumn Chase are being satisfied in accordance with the Developer Agreement, dated April 26, 2012, between Hertzler Road Associates, L.P. and Upper Allen Township.
4. A Homeowners Association is proposed with the development. The Home Owners Association Documents shall be reviewed by the Township in conjunction with this plan. The association shall be responsible for maintenance and upkeep of the following:
   a. All Open Space Areas except for open space areas accepted by the township for recreation land dedication (See notes on Open Space below);
   b. All on–site stormwater management facilities located outside of a public right–of–way;
   c. All sidewalk located within Open Space areas and sidewalk within the public right–of–way that abuts open space areas. Individual property owners of single family detached dwelling lots are responsible for sidewalk maintenance and snow removal of the sidewalk abutting their respective lot (there are no single–family detached dwelling lots proposed in Phase II although note provided for consistency);
   d. Boulevard Landscape islands;
   a. The landscape and boulevard islands shall be maintained by the developer until such responsibility is transferred to the homeowners association established with the development. Upper Allen Township shall not be held responsible for damage to plantings within the islands for any reason, and the municipality may remove or trim the vegetation if necessary for public safety.
5. The boundary information is based on a field survey performed by CEDG, Inc. in April 2005 & August 2008 and verified by A to Z Land Consulting Services, LLC. In May & June 2022. The horizontal datum is NAD 83. The bearing is based on state plane coordinates, Pennsylvania south zone. Site benchmark: Northeasterly corner of concrete headwall on the southerly side of Hertzler Road, approximately 300' east of railroad crossing. Elev.=445.75 (NAVD 88) Topographic information shown is based on photogrammetry mapping performed by air survey, flown April 6, 2005. The vertical datum is NAVD 1988.
6. All streets proposed with this project shall be constructed to township standards and shall be offered for dedication to the township upon completion of improvements. All proposed streets are classified as minor streets and shall be 34' wide curbed cartways (slant curb) with an associated 50' right–of–way except for the boulevard entrances which will be 20' cartways with a 10' landscaped boulevard island with an associated 66' right–of–way. Hertzler Road shall be improved along the subject tract's entire length of road frontage and certain off site areas as detailed in the Developer Agreement. The portions of Hertzler Road outside of the approximately 1,125 linear feet associated with Phase 1 (east to Klinedinst Road and west approximately 650' to the western property line of 521 Hertzler Road) will be widened to approximately 24 feet (see Hertzler Road Design Plan) and improved via a cement based full depth reclamation to include 12" of cement treated base at 5% cement, 2.5" base paving course and 1.5" wearing course as outlined in the Kleinfelder Geotechnical Engineering Report dated May 27, 2021. There are no Hertzler Road improvements nor any boulevards associated with this Phase V Plan, complete note carried over for consistency with previous plans.
7. There is an unnamed stream tributary to the Yellow Breeches Creek (CWF) that parallels Hertzler Road through the site. There is a 0.25 acre wetland pocket located along the south side of Hertzler Road towards the eastern side of the site (no wetland impacts proposed). There are no significant rock outcrops or contaminated soils known to exist on the site. There are two (2) sink holes–depressions located along the southern property line on the south side of Hertzler Road; the sinkholes are proposed to be repaired with the applicable future phase. A Water Obstruction and Encroachment Permit was obtained for the stream impacts associated with Hertzler Road improvements (Permit No. E21–468, issued on April 28, 2020.)
8. Within clear sight triangles as shown on this plan, no structure or growing material shall exceed a height of 3' above the grade of the street, and no branch of a tree, or obstruction, shall be lower than 9' feet above the grade of the street, with the exception of traffic signs, public utility poles, and similar–type structures.
9. Nothing shall be planted, placed, or set within any easement that would affect the function of the easement or conflict with the easement agreement.
10. The applicant is responsible for paying for the installation of all street and traffic control signs required for this project as deemed necessary by Upper Allen Township. All traffic control signs and devices are to be installed prior to any certificate of occupancy being issued. Street signs shall conform to PennDOT Publication 236M, dated April 1997, as amended. In addition, a separate permit is required for development signs, and all signs shall conform to all applicable requirements within Chapter 245, Article XXIII of the Codified Ordinances of Upper Allen Township or such applicable ordinances that are in effect at the time of the application for the sign.
11. The proposed water lines shown on this plan are for conceptual purposes only. Veolia Water (public supplier), per their standard procedures, shall provide the project's water design for the project after approval of the Final Plans.
12. A Geologic Evaluation and Infiltration Testing Report was prepared for the project by CMX, 910 Century Drive, Mechanicsburg, PA 17055; 717–458–0800. The site is partially underlain by limestone geology. Due to the geology, the site has an increased potential for sinkhole development. Because all sinkhole are unique and repair methods for each type may require a specific method for repair, it is recommended that the site contractor consult with a Geo–Technical Engineer prior to start of construction of each phase. The Geo–Technical Engineer should evaluate the site's features for vertical and horizontal extents and relation of features to the proposed improvements and then provide repair measures to the contractor for repair of each sinkhole. In addition, builders are recommended to consult with a Geo–Technical engineer for guidance pertaining to building construction in sinkhole prone areas.
13. All new utilities shall be placed under ground.
14. There is a FEMA delineated floodplain located on the property. The floodplain is located along the eastern property line where Hertzler Road and the existing unnamed stream pass under the railroad bridge. The floodplain is depicted per scan overlay of Flood Insurance Rate Map (Community–Panel Number 42041C0287E, Zone A, dated March 16, 2009). The current study is a Zone A non–detailed study area with no base flood elevation information.
15. Street lighting is proposed throughout the development as shown on these plans. Street lights are proposed at all street intersections and at other locations depicted on the plan. In addition to the street lights, each single family detached dwelling lot shall install an outside electric dusk til dawn yard light. Each individual home owner shall be responsible for maintenance of their own yard light although the Home Owners Association shall be responsible for maintenance of the street lights; developer is responsible for street light maintenance until the HOA is formed.
16. All proposed property corners and existing unmarked property corners shall be marked with iron pins or concrete monuments prior to dedication of the streets. Concrete monuments will be set as shown, all other property corners to be marked with iron pins. All proposed marker materials and installation methods shall be in accordance with Township standards.
17. An NPDES Permit was obtained from the Cumberland County Soil Conservation District authorizing earth disturbance activities associated with the project (Permit No. PAC210094A–1, expiration date 12–7–2024). The contractor shall implement erosion and sedimentation pollution control measures in accordance with PA State Code Chapter 102 requirements and associated NPDES Permit Conditions. Contractor must obtain a copy of the approved Erosion Control Plan and be a co–permittee on the NPDES Permit prior to start of construction. The NPDES permittee and all co–permittee shall be responsible for implementation and maintenance of erosion control measures in accordance with the approved Erosion Control Plan.
18. All lot grading shall maintain positive drainage away from the dwelling. Lot owners are required to maintain lot grading and surface drainage patterns and characteristics consistent with the approved grading plan.
19. Manhole covers for stormwater manholes shall be cast with the word "Storm" for identification purposes.
20. Any construction or work within the public street right–of–way related to storm drainage facilities requires inspection by Upper Allen Township. Provide a minimum of 48 hours notice to the Township before starting work.
21. Contractor shall schedule a pre–construction meeting with the Township Engineer at least 48 hours prior to starting site construction activities.
22. In compliance with Act 287 of 1974 as amended by Act 199 of 2004, all underground utilities shown on this plan are a compilation of actual field locations and data furnished from information supplied by others. The developer, surveyor and engineer assume no responsibility for the location of any underground utilities as depicted on this drawing. Any request for additional underground utility information should be directed to that respected utility company. See One Call table for Serial Numbers.
23. All known existing easements and rights–of–ways have been shown on the plan and all utilities have been notified per PA One Call requirements.
24. All lots shall be subject to restrictions and covenants as defined in the "Protective Covenants, Reservations and Easements". All property owners shall be provided with a copy of the covenants documents.
25. All single– family detached dwellings will have a two–vehicle garage and a driveway with additional space to equal at least three off–street parking spaces. Maximum driveway width at the street right–of–way line is 10' for a single car garage and 24' width for a 2 car garage. All driveways shall not connect with a public street within 50 feet of the right–of–way lines of any intersecting streets nor within five feet of a fire hydrant, in accordance with Section 220–17.A(3) of the Codified Ordinances of Upper Allen Township.
26. As–built Mylar plans and electronic data files shall be provided to the Township. All drawings must be signed and sealed by a professional engineer or land surveyor attesting to the correctness of the facility information shown, in accordance with Section 220–13.C(2) of the Codified Ordinances of Upper Allen Township.
27. The Home Owners Association shall maintain the grass area around the Greenway Trail and associated easement areas.
28. Should a phased final plan propose fewer trees and/or shrubs than Ordinance requirements, the additional trees required to meet Ordinance requirements should be planted in the open space areas and/or adjacent to or along the Greenway Trail as directed by the Township.

APPLICANT & OWNER

HERTZLER ROAD ASSOCIATES, L.P.
4400 DEER PATH ROAD, SUITE 201
HARRISBURG, PA 17110
(717) 234-4000

SANITARY SEWER CONSTRUCTION NOTES

1. All sanitary sewer construction materials and methods shall conform to the latest standards of Upper Allen Township, Cumberland County, Pennsylvania and shall be subject to the approval by the township's engineer. See Standard construction and material specifications for sanitary sewer system extensions, latest edition. Construction of all sanitary sewers shall conform to standards adopted by Upper Allen Township. Contractor shall obtain specifications and construction details directly from the Authority.
2. All sanitary sewers constructed in public streets shall be subject to backfill compaction testing at the discretion of the Township representative and at the expense of the developer.
3. All proposed sanitary sewer mains shall be offered for dedication to Upper Allen Township. Upon completion of the sanitary sewer extension and before release of installation financial security and before acceptance of maintenance financial security, developer must prepare a separate sanitary sewer deed of dedication and easement agreement for the sanitary sewer extension for Township review, followed by recording of same by the developer.
4. Upon acceptance of any sanitary sewer mains, laterals, manholes and other appurtenances by the Township located in public streets not yet dedicated to the Township, developer grants to Township a temporary sanitary sewer easement thirty (30) feet in width measured from the centerline of the sanitary sewer main for the purpose of emergency or other repairs to the sanitary sewer system, until such time that the street and all utilities included therein are dedicated to the Township.
5. On streets having grades 2% or greater, sanitary sewer manhole frames and covers shall be adjusted using tapered rubber riser rings per standard details.
6. A 30' wide right–of–way shall be provided around all proposed sewers that are not located within a public right–of–way.
7. Contractor shall test pit all existing utility crossings prior to installing any sanitary sewer pipe to verify existing horizontal and vertical elevations to assure no conflict with new sewer.
8. When sewers are installed through Township's right–of–way, including planter islands, no house, structure, trees, shrubs, gardens, or obstruction on or over, or that will interfere with vehicular access for the construction, maintenance or operation of any sewer, shall be installed within limits of the easement, and no changes in the grade or contour over the sewer shall be permitted in accordance with the Township's standard deed of dedication.
9. Contractor shall field verify existing manhole elevations prior to construction.
10. All sanitary sewer pipe installed shall be inspected by a Upper Allen Township representative prior to backfilling.
11. A ten (10') foot minimum horizontal separation or an 18" vertical separation must be maintained wherever possible between water lines and sewer lines.
12. Sanitary sewer redesign may be required upon completion and approval of Veolia Water Company's water system design for the area.

GENERAL CONSTRUCTION NOTES

1. The intent of this plan is to obtain subdivision / land development approval for the planned site development. Construction procedures have not been specified by Mellott Engineering, Inc. beyond what is required by the township and the standard methods as outlined in Pennsylvania Department of Transportation (PennDOT) Publication 408 for earth moving and installation of PennDOT structures.
2. No environmental studies, subsurface investigations or testing of soils were performed in the preparation of these plans beyond the Geologic Evaluation and Infiltration Testing Report prepared for the project by CMX. Mellott Engineering, Inc. recommends the owner and contractor consult a geotechnical engineer prior to construction to determine appropriate soil bearing capacity, fill placement procedures, compaction and building foundation requirements.
3. The project drawings are generally diagrammatic in indicating the presence of existing underground utilities. Information on existing utilities has been compiled from available information including utility company and municipal record maps and field survey and is not guaranteed correct or complete. Utilities are shown to alert the contractor to their presence and the contractor is solely responsible for determining actual locations and elevations of all utilities, including services. When the utilities are to be left in place, the contractor shall provide adequate means of support and protection during the excavation and backfilling operations.
4. Should any uncharted or incorrectly charted, existing piping or other utility be uncovered during excavation, consult the engineer immediately for directions before proceeding further with the work in this area.
5. Do not interrupt existing utilities servicing facilities occupied and used by the owner or others during occupied hours except when such interruptions have been authorized in writing by the owner, Township and applicable utility company. Interruptions shall only occur after acceptable temporary service has been provided.
6. The contractor shall restore any structure or areas disturbed during construction to their original condition or better if they are not indicated to be altered on the plans.
7. The contractor shall verify all site conditions in the field and contact the site engineer if there are any questions or conflicts regarding the construction documents and/or field conditions.
8. The contractor is responsible for ensuring all construction methods and procedures meet all regulatory requirements and developer requirements. The contractor is responsible for obtaining all necessary permits required by governmental agencies prior to construction. The contractor shall obtain all necessary permits from the municipality required to perform the work.
9. The fire hydrants shown on this plan have been reviewed by the township Fire Marshall. Veolia Water will provide a water main design after the plan is approved by the township. All hydrants must be within 600 feet of structures and have the Storz adapter, in accordance with Section 220–22 of the of the Codified Ordinances of Upper Allen Township

PENNSYLVANIA ONE CALL SYSTEM, INC.
1-800-242-1776
STOP-CALL BEFORE YOU DIG!

Before You Dig Anywhere

In . . . PENNSYLVANIA

STOP! Call 1–800–242–1776
Toll Free

PA Law requires 3 working days before you excavate

PA One Call System, Inc.

One Call Serial #: –

PENNSYLVANIA ACT 199 (2004) AS AMENDED REQUIRES NOTIFICATION OF EXCAVATORS, DESIGNERS, OR ANY PERSON PREPARING TO DISTURB THE EARTH'S SURFACE ANYWHERE IN THE COMMONWEALTH.

COMPANY: PENNSYLVANIA AMERICAN WATER ADDRESS: 852 WESLEY DRIVE MECHANICSBURG, PA. 17055 CONTACT: JERRY BONANNO

COMPANY: FRONTIER COMMUNICATIONS CTSI LLC ADDRESS: 100 CTE DR DALLAS, PA. 18612 CONTACT: DAVID MORRIS

COMPANY: ELANTIC NETWORKS INC ADDRESS: 1450 E PARHAM RD RICHMOND, VA. 23228 CONTACT: CONI DUFF EMAIL: cduff@cavtel.com

COMPANY: VERIZON PENNSYLVANIA INC ADDRESS: 201 STANWIX ST 4TH FLOOR PITTSBURGH, PA. 15222 CONTACT: OFFICE PERSONNEL

COMPANY: BUCKEYE PARTNERS ADDRESS: PO BOX 368 EMMAUS, PA. 180490368 CONTACT: DONALD SAMALA

COMPANY: Veolia WATER ADDRESS: 317 NORTH MARKET STREET MECHANICSBURG, PA. 17055 CONTACT: KIM GENETTI EMAIL: Kim.Genetti@veolia–na.com

COMPANY: FIRSTENERGY CORP ADDRESS: 76 S MAIN ST AKRON, OH. 443081890 CONTACT: OFFICE PERSONNEL

COMPANY: XO COMMUNICATIONS INC ADDRESS: C/O DE–TECH INC 120 N PEARL ST CRESTLINE, OH. 44827 CONTACT: ROBERT FREED E EMAIL: jessica.m.revelle@sprint.com

COMPANY: PPL ELECTRIC UTILITIES CORPORATION ADDRESS: 1801 BROOKWOOD ST HARRISBURG, PA. 171042222 CONTACT: JEANETTE ANDERSON EMAIL: jlanderson@pplweb.com

COMPANY: COMCAST CABLE COMMUNICATIONS INC ADDRESS: 4601 SMITH ST HARRISBURG, PA. 17109 CONTACT: CONSTRUCTION COORDINATOR

COMPANY: UPPER ALLEN TOWNSHIP OF ADDRESS: 100 GETTYSBURG PIKE MECHANICSBURG, PA. 17055 CONTACT: KODI B. HOCKENBERRY EMAIL: khockenberry@uatwp.org

COMPANY: UGI UTILITIES INC ADDRESS: 1500 PAXTON ST HARRISBURG, PA. 17104 CONTACT: TOM WITT EMAIL: twitt@ugi.com

COMPANY: SPRINT COMMUNICATIONS CO LP ADDRESS: 6550 SPRINT PARKWAY MS: KSOPHR0312 OVERLAND PARK, KS. 662516109 CONTACT: JESSICA REVELLE EMAIL: jessica.m.revelle@sprint.com

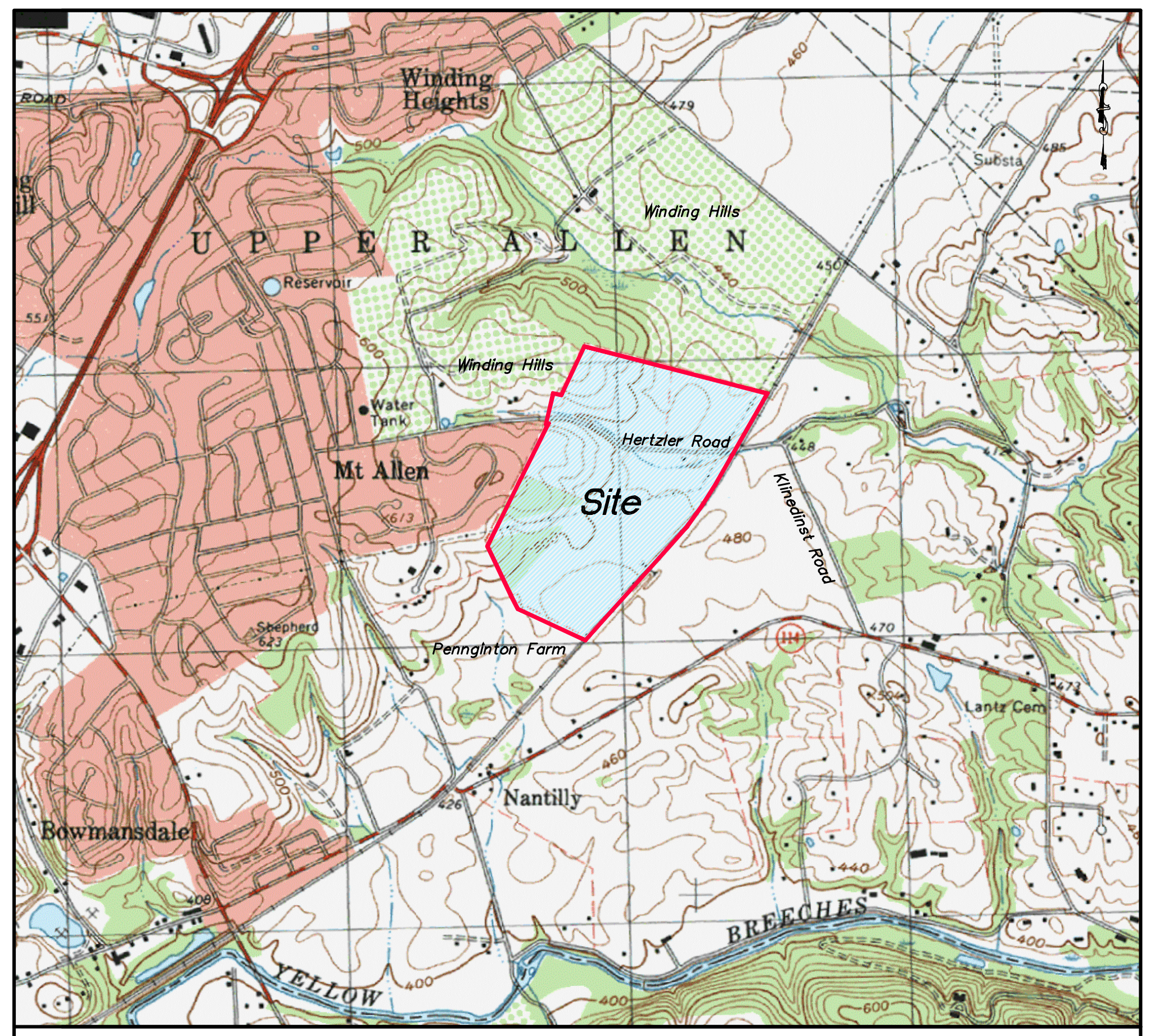

SITE LOCATION MAP

SCALE : 1" = 2,000'

Tax Parcel associated with this plan

Tax Parcel No. 42–11–0272–001

The below waivers and deferrals as listed were granted with the February 15, 2012 tentative approval of the Autumn Chase PRD.

Section	Waiver Requirement	Date of Waiver Approval
225-15.B(5)	Cul-de-sacs to not exceed 800 feet and not serve more than 20 dwelling units.	February 15, 2012

Section	Modification Requirement	Date of Modification Approval
220-18.B	Allowed the residential block to have a length of 1,652 feet instead of the required maximum length of 1,500 feet.	February 15, 2012
220-15.B(11)(a) & 220-15.F(2)	To and the requirements of Section 220-15.F(2) and allow the applicant to provide widening along Hertzler Road to 24 feet with a full width 1 ½ inch depth overlay pavement along the property frontage with the condition that the applicant also widen to 24 feet and provide full width 1 ½ inch depth overlay pavement Hertzler Road from the development west to the property line of the Winding Hill PRD. A note shall be added on the plan stating that in the opinion of the Township Engineer, should field conditions indicate insufficient structural integrity in areas of existing pavement to receive overlay, those areas shall receive full depth reconstruction (Section 220-15.G(1)).	February 15, 2012
220-16.A(3)	Permit slant curbing within development instead of vertical curbing.	February 15, 2012
220-16.B.(4)	Sidewalks to be installed along one side of proposed streets ("Road J"/ Brittany Circle and Lot OS-7 only) instead of both sides of the street.	February 15, 2012
220-16.B(3)	Provide a six foot wide walking trail on the south side of Hertzler Road in lieu of sidewalks. The trail shall be shown on the final plan extending from the western property boundary line with the existing Allendale PRD to the Township Greenway property to the east.	February 15, 2012
220-16.A.(2)	To permit Hertzler Road improvements in lieu of curbs, to include widening and overlay of off-site portions of the road west approximately 650 feet toward the improvements completed by the Winding Hills PRD and east approximately 400 feet toward the intersection of Hertzler Road/ and Klinedinst Road. Improvements along the property frontage shall consist of widening of the cartway to twenty-four (24) feet and installing a 1 ½ inch wearing course overlay. A note shall be added on the plan stating that in the opinion of the Township Engineer, should field conditions indicate insufficient structural integrity in areas of existing pavement to receive overlay, those areas shall receive full depth reconstruction (Section 220-15.G(1)).	February 15, 2012

See below additional waivers requested with this Final Plan.

WAIVER SECTION	WAIVER REQUIREMENT	DATE OF WAIVER REQUEST	DATE OF WAIVER APPROVAL
220–9.C(2)(o)	Provide one foot contour interval	February 1, 2023	December 6, 2023
220–10.B(2)(b)	Provide street cross sections at 50' intervals	February 1, 2023	December 6, 2023

MELLOTT ENGINEERING, INC.
CIVIL ENGINEERING • LAND PLANNING & DESIGN • WATER RESOURCES
7500 DEVONSHIRE HEIGHTS ROAD • HUMMELSTOWN, PA 17036
mellotteng@comcast.net
(717)–566–6533

APPROVED BY THE BOARD OF COMMISSIONERS OF UPPER ALLEN TOWNSHIP, THIS 6th DAY OF December, 2023.

THE CONDITIONS OF APPROVAL WERE SATISFIED THIS ___ DAY OF ______________, 202_.

ATTEST: ____________________ SECRETARY ____________________ CHAIRMAN

APPROVED BY THE PLANNING COMMISSION OF UPPER ALLEN TOWNSHIP, THIS 27th DAY OF February, 2023.

ATTEST: ____________________ SECRETARY ____________________ CHAIRMAN

REVIEWED THIS ______ DAY OF ______________, 20______, BY CUMBERLAND COUNTY PLANNING DEPARTMENT.

ATTEST: ____________________ DIRECTOR OF PLANNING

REVIEWED BY THE UPPER ALLEN TOWNSHIP ENGINEER

REVIEWED THIS ___ DAY OF ___________, 202___

______________________________ ENGINEER

I, Timothy L. Mellott, P.E., hereby certify that I am a Pennsylvania registered professional engineer and that all elements of the plan are inconformity with the Township Code and applicable state regulations, as required by Section 220–15.N(3) of the Codified Ordinances of Upper Allen Township.

I, Timothy L. Mellott, P.E., hereby certify the portions of this site are underlain by limestone bedrock based on geological maps, and upon a carbonate assesment report prepared by Pierre O. MaCoy, Geologist with CMX.

"I, Timothy L. Mellott, P.E., on this date Tim L Mellott, have reviewed and hereby certify that the SWM site plan meets all design standards and criteria of the Upper Allen Township Stormwater Management Ordinance."

TIMOTHY L. MELLOTT
ENGINEER No. 056207–E

Tim L Mellott
Timothy L. Mellott, P.E.
Mellott Engineering, Inc.
7500 Devonshire Heights Road
Hummelstown, PA 17036
PH: 717–566–6533
FAX: 717–427–2700

COMMONWEALTH OF PENNSYLVANIA
COUNTY OF
ON THIS THE _____ DAY OF ______________________, 20____

BEFORE ME, ______________________________, THE UNDERSIGNED OFFICER, PERSONALLY APPEARED WHO ACKNOWLEDGED HIMSELF TO BE THE PRESIDENT OR VICE PRESIDENT OF HERTZLER ROAD ASSOCIATED, L.P. A CORPORATION, AND THAT HE AS SUCH PRESIDENT OR VICE PRESIDENT, BEING AUTHORIZED TO DO SO, EXECUTED THE FOREGOING INSTRUMENT FOR THE PURPOSE THEREIN CONTAINED BY SIGNING THE NAME OF THE CORPORATION BY HIMSELF AS PRESIDENT OR VICE PRESIDENT.

IN WITNESS WHEREOF, I HAVE HEREUNTO SET MY HAND AND OFFICIAL SEAL.

______________ NOTARY PUBLIC MY COMMISSION EXPIRES ______________ DATE

IT IS HEREBY CERTIFIED THAT THE UNDERSIGNED HAS LEGAL OR EQUITABLE TITLE TO THE LAND SHOWN AND THAT ALL ROADS, STREETS OR RIGHT–OF–WAY (OR EASEMENTS) SHOWN HEREON, IF NOT PREVIOUSLY DEDICATED, ARE HEREBY OFFERED FOR PUBLIC USE.

______________________________ OWNER

OWNER STORMWATER MANAGEMENT FACILITIES ACKOWLEDGEMENT

I Francis McNaughton, hereby acknowledge that the Stormwater Management Facilities and BMP's are to be permanent fixtures that can be altered or removed only after approval of a revised plan by the applicable municipality.

______________________________ OWNER

I, Rory Chapman, hereby certify that I am a registered Land Surveyor in compliance with the laws of the Commonwealth of Pennsylvania; that this plan correctly represents a survey originally completed by CDEG on April 2005 and reconfirmed by A to Z Land Surveyors in May 2022; that all monuments shown thereon actually exist; and that their location, size, type and material are accurately shown.

______________________________ SURVEYOR
Rory Chapman, P.L.S.,

RORY L. CHAPMAN
LAND SURVEYOR SU061142

No.	REVISION	DATE	
5	Addressing Review Comments	11–16–2023	DRAWING ID 202236cov
6	Modified dates and Commisioners signature block	12–7–2023	DATE: February 1, 2023
7	Added conditions notes to cover, setback notes to sheets 4 & 5 & shifted trees	1–4–2024	SHEET 1 of 21
8	Added note to landscape plan regarding tree separation distance from trail & swale	1–12–2024	

INTENT OF PLAN

The intent of this plan sheet is to provide a Master Development Plan for the overall Autumn Chase PRD. The Autumn Chase PRD was approved by the Upper Allen Township Board of Commissioners as per Written decision dated – May 8, 2012. The project shall be implemented in accordance with the Developer Agreement, dated April 26, 2012, between Hertzler Road Associates, L.P. and Upper Allen Township. See the below notes and plan references for general project information; see other plan sheets for detailed information pertaining to Phase V.

PLAN NOTES
(See circled # on plan for note association)

1. Autumn Chase is an approved Planned Residential Development consisting of a total of 295 residential units with the following uses (See Phasing Plan):
   - 161 Single–family dwelling lots (78 North and 83 south of Hertzler Road);
   - 60 Duplex Units;
   - 74 Townhouse Units;
   - Open Space Lots (>30% of gross tract)
2. A Homeowners Association is proposed with the development. The Home Owners Association Documents shall be reviewed by the Township in conjunction with this plan. The association shall be responsible for maintenance and upkeep of the following:
   a. All Open Space Areas;
   b. All on–site stormwater management facilities located outside of a public right–of–way including but not limited to: stormwater detention basins, water quality basins, infiltration facilities, piping, riprap aprons, swales, etc.;
   c. All sidewalk located within Open Space areas and sidewalk within the public right–of–way that abuts open space areas;
   d. Boulevard Landscape islands (landscape and boulevard islands shall be maintained by the developer until such responsibility is transferred to the homeowners association established with the development. Upper Allen Township shall not be held responsible for damage to plantings within the islands for any reason, and the municipality may remove or trim the vegetation if necessary for public safety);
3. Hertzler Road shall be improved along the subject tract's entire length of road frontage and off site in accordance with the Developers Agreement.
4. DEP Permitting has been obtained for the stream impacts associated with the proposed Hertzler Road improvements. All work to be in accordance with the permit conditions.
5. All streets proposed with this project shall be constructed to township standards and shall be offered for dedication to the township upon completion of improvements. All proposed streets are classified as minor streets and shall be 34' wide curbed cartways (slant curb) with an associated 50' right–of–way except for the boulevard entrances which will be 20' cartways with a 10' landscaped boulevard island with an associated 66' right–of–way. All Landscape Boulevard Islands shall be maintained by the homeowners association.
6. Stormwater Best Management Practices were incorporated into the site design to manage stormwater runoff discharge rates, enhance water quality and promote groundwater recharge to the extent practical; see Post Construction Stormwater Management Plan.
7. There is a FEMA delineated floodplain located on the property. The floodplain is located along the eastern property line where Hertzler Road and the existing unnamed stream pass under the railroad bridge. The floodplain is depicted per scan overlay of Flood Insurance Rate Map (Community–Panel Number 42041C0287E, Zone A, dated March 16, 2009). The current study is a Zone A non–detailed study area with no base flood elevation information
8. Landscaping is proposed throughout the development to enhance the community and to provide other desired functions, such as:
   a. Tree buffer proposed along Hertzler Road frontage to provide for a visual vegetative buffer between Hertzler Road and units proposed in the development (trees under the PPL right–of–way to be in accordance with PPL requirements);
   b. Tree plantings proposed along the existing stream (parallels Hertzler Road) to provide a vegetated riparian buffer along the stream;
   c. Tree plantings and landscaping proposed around some of the water quality facilities (plantings provide shade to cool runoff)
   d. Tree plantings and landscaping other than street trees shall be selected in accordance with Upper Allen Township Subdivision and Land Development Ordinance Section 220–26.B(2).
   e. Boulevard islands shall be landscaped to provide for shading and overall aesthetic enhancement to the community;
   f. Street trees shall be planted along both sides of all proposed streets at a rate of two (2) trees per every 100'; all proposed street trees shall be selected and installed in accordance with Upper Allen Township Subdivision and Land Development Ordinance Section 220–26.D(7)
   g. Should a phased final plan propose fewer trees and/or shrubs than Ordinance requirements, the additional trees required to meet Ordinance requirements should be planted in the open space areas and/or adjacent to or along the Greenway Trail as directed by the Township.
9. Street lighting is proposed throughout the development as shown on this plan. Street lights are proposed at all street intersections and at other locations depicted on the plan. In addition to the street lights, each single family detached dwelling lot shall install an outside electric dusk til dawn yard light. Each individual home owner shall be responsible for maintenance of their own yard light although the Home Owners Association shall be responsible for maintenance of the street lights; developer is responsible for street light maintenance until the HOA is formed.
10. A six foot wide off–street trail shall be constructed along the frontage of Hertzler Road as shown on this plan. Timing of the trail installation shall be installed in accordance the Developer Agreement, dated April 26, 2012, between Hertzler Road Associates, L.P. and Upper Allen Township.
11. Open Space is provided throughout the development (>30% of gross tract area). Total area of Open Space Lots 1–9 is 65.457 acres.
12. In accordance with the Developer Agreement, the Residual Area is not a part of and shall not be subject to the terms of the Autumn Chase PRD. A stormwater easement is hereby established over the residual area, in a location, size and designation to be established with each applicable Phase, for the purposes of conveying and managing stormwater flows from the Autumn Chase PRD to the Southern Basins. The easements shall in no way restrict future use of the Residual Area."

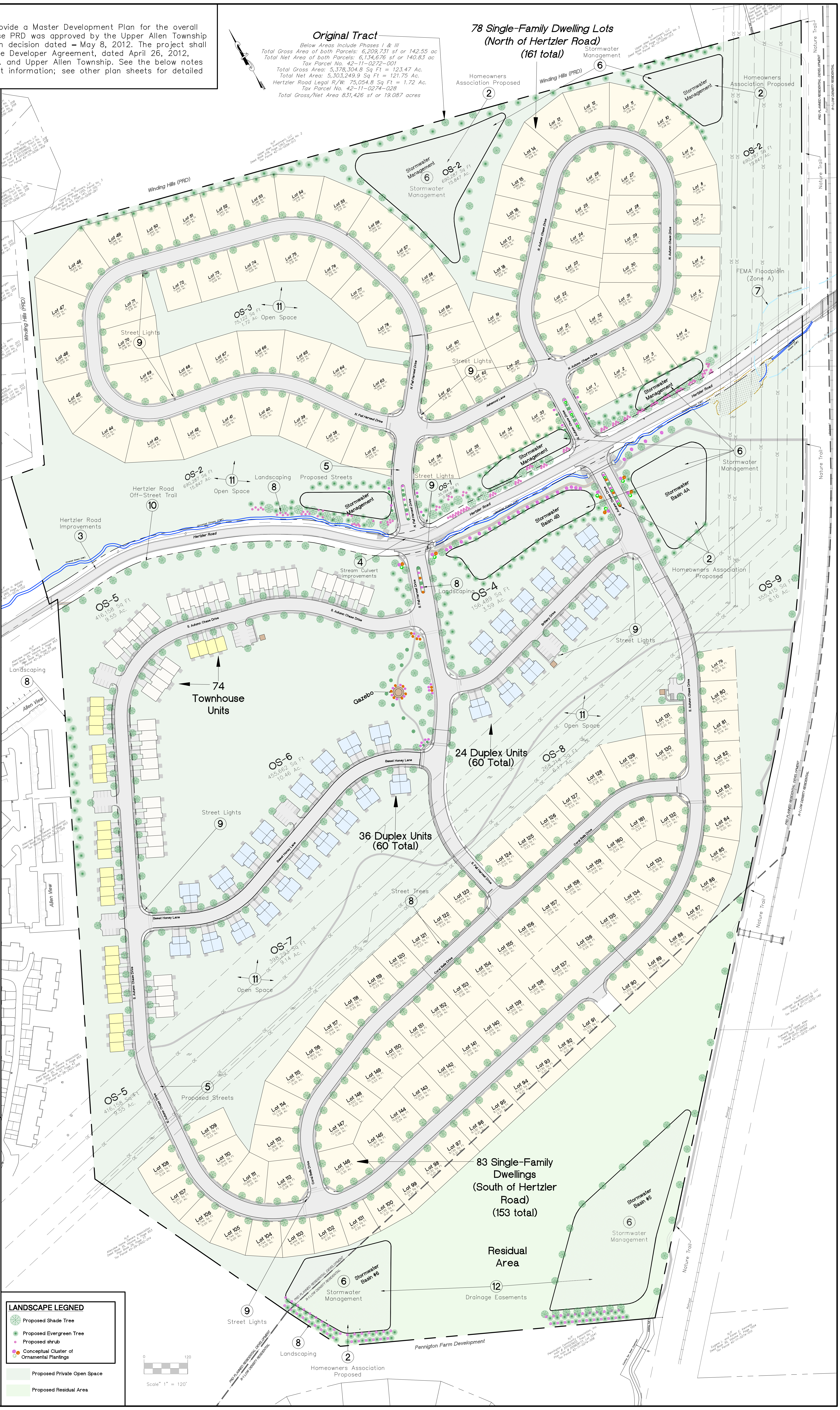

78 Single-Family Dwelling Lots
(North of Hertzler Road)
(161 total)
83 Single-Family Dwellings
(South of Hertzler Road)
(153 total)
24 Duplex Units
(60 Total)
36 Duplex Units
(60 Total)
74
Townhouse
Units
Residual
Area
Gazebo
Hertzler Road
Winding Hills (PRD)
Allen View
Pennington Farm Development
Nature Trail
OS-1
OS-2
OS-3
OS-4
OS-5
OS-6
OS-7
OS-8
OS-9
Stormwater Basin 4A
Stormwater Basin 4B
Stormwater Basin #5
Stormwater Basin #6
Homeowners Association Proposed
Stormwater Management
Hertzler Road Improvements
Stream Culvert Improvements
Proposed Streets
Street Lights
FEMA Floodplain (Zone A)
Landscaping
Street Trees
Hertzler Road Off-Street Trail
Open Space
Drainage Easements

Original Tract

Below Areas Include Phases I & III
Total Gross Area of both Parcels: 6,209,731 sf or 142.55 ac
Total Net Area of both Parcels: 6,134,676 sf or 140.83 ac
Tax Parcel No. 42–11–0272–001
Total Gross Area: 5,378,304.8 Sq Ft = 123.47 Ac.
Total Net Area: 5,303,249.9 Sq Ft = 121.75 Ac.
Hertzler Road Legal R/W: 75,054.8 Sq Ft = 1.72 Ac.
Tax Parcel No. 42–11–0274–028
Total Gross/Net Area 831,426 sf or 19.087 acres

Scale" 1" = 120'

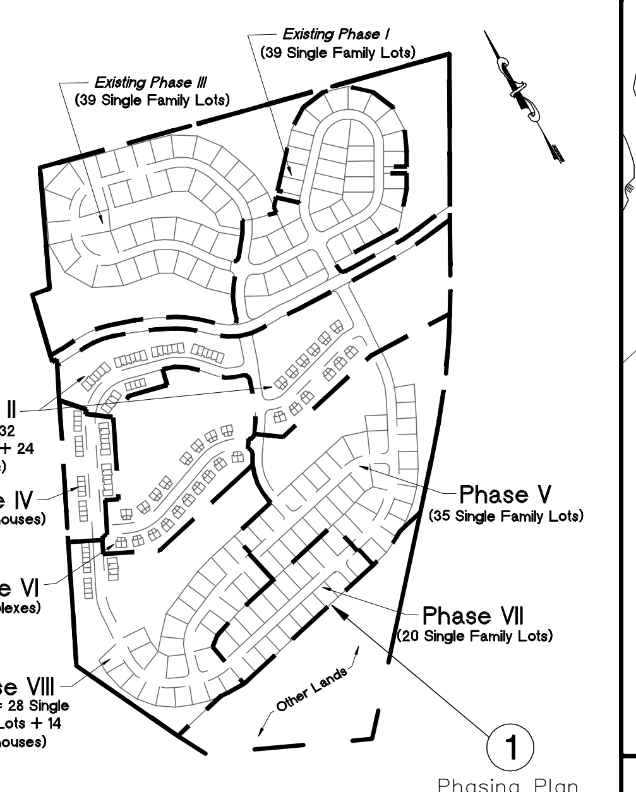

Existing Phase I (39 Single Family Lots)
Existing Phase III (39 Single Family Lots)
Phase II (56 Total: 32 Townhouses + 24 Duplexes)
Phase IV (28 Townhouses)
Phase V (35 Single Family Lots)
Phase VI (36 Duplexes)
Phase VII (20 Single Family Lots)
Phase VIII (42 Total: 28 Single Family Lots + 14 townhouses)
Other Lands
1
Phasing Plan

Phasing Schedule: In accordance with Section 709(c) of the MPC, 53 P.S. § 10709(c), Developer's intended schedule for the phases of the Autumn Chase PRD (each a "Phase" and collectively the "Phases") is as follows (the "Phasing Schedule"):

Existing Phase 1 - 39 Units (Plan filing date 2015)
Phase 2 - 56 Units (Plan filing date 2022)
Existing Phase 3 - 39 Units (Plan filing date 2021)
Phase 4 - 28 Units (Plan filing date 2023)
Phase 5 - 35 Units (Plan filing date 2023)
Phase 6 - 36 Units (Plan filing date 2025)
Phase 7 - 20 Units (Plan filing date 2026)
Phase 8 - 42 Units (Plan filing date 2028)

PHASING PLAN
Scale: 1" = 1,000'

LANDSCAPE LEGNED

- Proposed Shade Tree
- Proposed Evergreen Tree
- Proposed shrub
- Conceptual Cluster of Ornamental Plantings
- Proposed Private Open Space
- Proposed Residual Area

MASTER DEVELOPMENT PLAN
FOR
AUTUMN CHASE PRD - PHASE V
Land Developer: Hertzler Road Associates, L.P.
UPPER ALLEN TOWNSHIP CUMBERLAND COUNTY PENNSYLVANIA

Project No. 202236
Date February 1, 2023
Sheet No.
2 of 21

MELLOTT ENGINEERING, INC.
Civil Engineering • Land Planning & Development • Water Resources
7500 Devonshire Heights Road • Hummelstown, PA 17036
mellotteng@comcast.net
717–566–6533

	REVISIONS	DATE
1.	PPL Utility Pole location updates (PPL replaced existing poles)	2–17–2023
2.	Addressing Review Comments	3–7–2023
3.	Addressing Sanitary Sewer Comments	5–22–2023
4.	Addressing Review Comments	11–16–2023
5.	–	–
6.	–	–
7.	–	–
8.	–	–
9.	–	–

M:\Drawings\2022\202236 Autumn Chase V\202236 MP.dwg 11/15/2023 5:29:21 PM EST

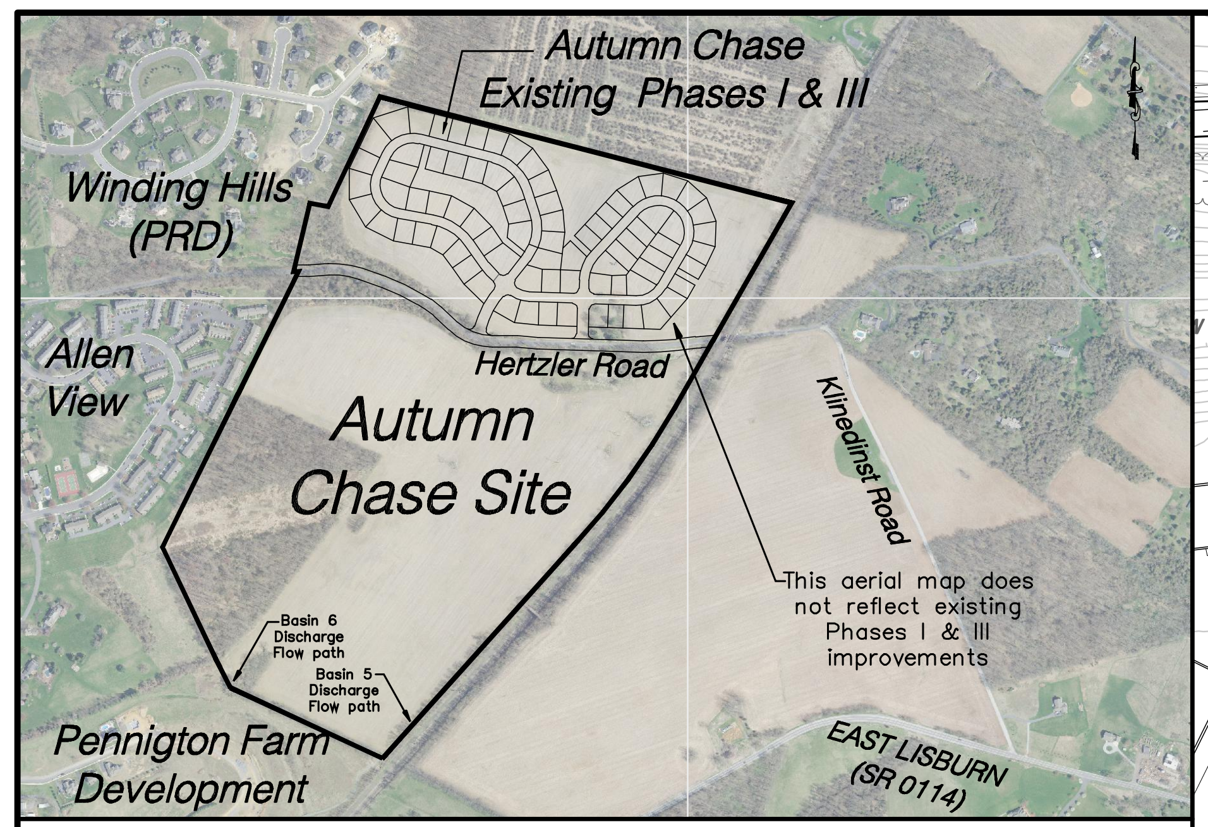
Autumn Chase
Existing Phases I & III
Winding Hills (PRD)
Allen View
Hertzler Road
Autumn Chase Site
Kimberlin Road
This aerial map does not reflect existing Phases I & III Improvements
Pennington Farm Development
EAST LISBURN (SR 0114)
PASADA Map 2018

AERIAL LOCATION MAP
Scale: 1" = 1,000'

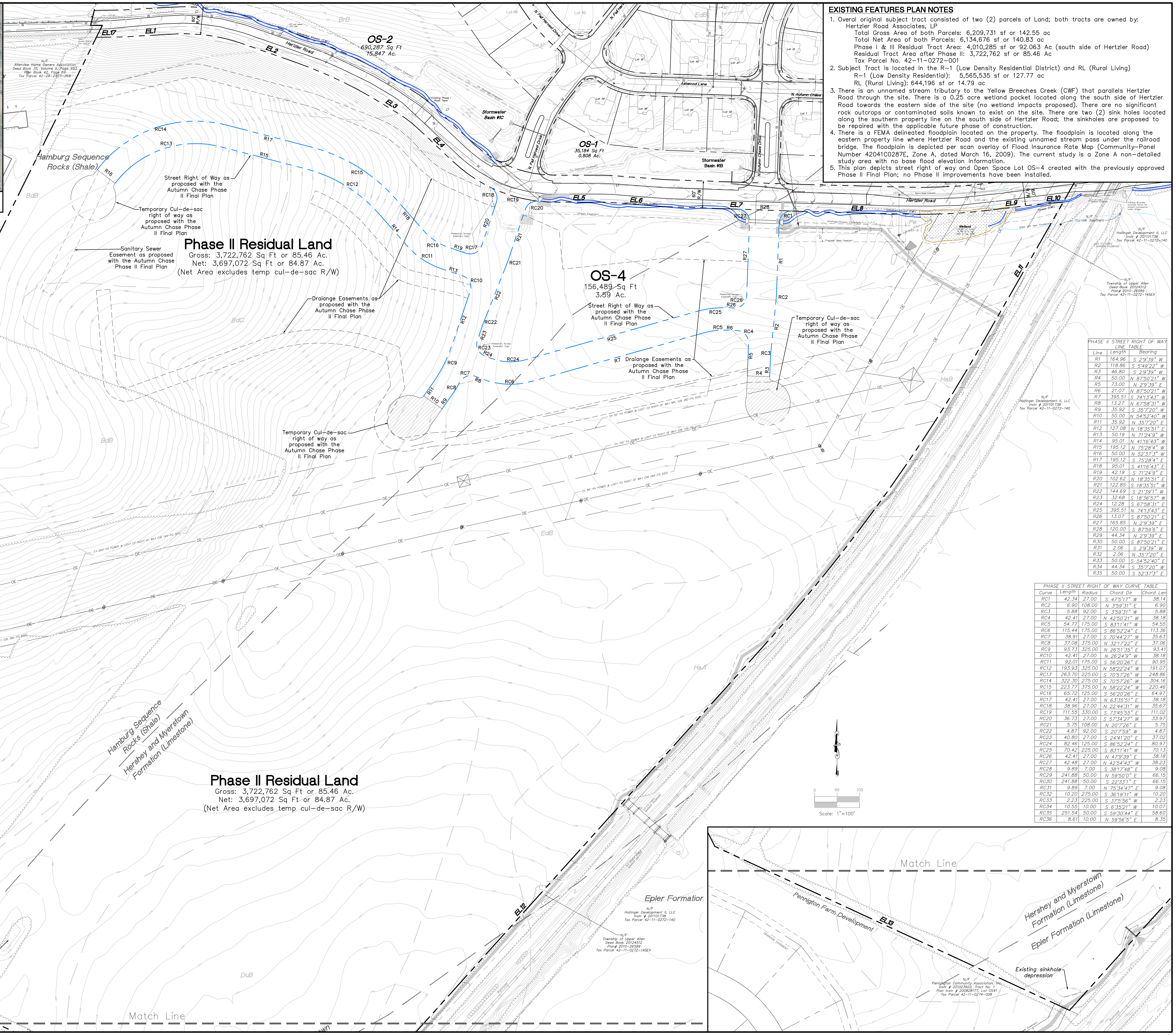
OS-2
690,287 Sq Ft
15,847 Ac.
Hertzler Road
OS-1
35,184 Sq Ft
0.808 Ac.
Stormwater Basin #1C
Stormwater Basin #1B
Ashwood Lane
N. Autumn Chase
Hamburg Sequence Rocks (Shale)
Street Right of Way as proposed with the Autumn Chase Phase II Final Plan
Temporary Cul-de-sac right of way as proposed with the Autumn Chase Phase II Final Plan
Sanitary Sewer Easement as proposed with the Autumn Chase Phase II Final Plan
Phase II Residual Land
Gross: 3,722,762 Sq Ft or 85.46 Ac.
Net: 3,697,072 Sq Ft or 84.87 Ac.
(Net Area excludes temp cul-de-sac R/W)
Drainage Easements as proposed with the Autumn Chase Phase II Final Plan
OS-4
156,489 Sq Ft
3.59 Ac.
Wetland
Allenview drive
Allen View
Hamburg Sequence Rocks (Shale)
Hershey and Myerstown Formation (Limestone)
Epler Formation
Existing sinkhole depression
Match Line
Pennington Farm Development
Hershey and Myerstown Formation (Limestone)
Epler Formation (Limestone)
EL1
EL2
EL3
EL4
EL5
EL6
EL7
EL8
EL9
EL10
EL11
EL12
EL13
EL14
EL15
EL16
EL17
Scale: 1"=100'

EXISTING FEATURES PLAN NOTES

1. Overal original subject tract consisted of two (2) parcels of Land; both tracts are owned by:
   Hertzler Road Associates, LP
   Total Gross Area of both Parcels: 6,209,731 sf or 142.55 ac
   Total Net Area of both Parcels: 6,134,676 sf or 140.83 ac
   Phase I & III Residual Tract Area: 4,010,285 sf or 92.063 Ac (south side of Hertzler Road)
   Residual Tract Area after Phase II: 3,722,762 sf or 85.46 Ac
   Tax Parcel No. 42–11–0272–001
2. Subject Tract is located in the R–1 (Low Density Residential District) and RL (Rural Living)
   R–1 (Low Density Residential): 5,565,535 sf or 127.77 ac
   RL (Rural Living): 644,196 sf or 14.79 ac
3. There is an unnamed stream tributary to the Yellow Breeches Creek (CWF) that parallels Hertzler Road through the site. There is a 0.25 acre wetland pocket located along the south side of Hertzler Road towards the eastern side of the site (no wetland impacts proposed). There are no significant rock outcrops or contaminated soils known to exist on the site. There are two (2) sink holes located along the southern property line on the south side of Hertzler Road; the sinkholes are proposed to be repaired with the applicable future phase of construction.
4. There is a FEMA delineated floodplain located on the property. The floodplain is located along the eastern property line where Hertzler Road and the existing unnamed stream pass under the railroad bridge. The floodplain is depicted per scan overlay of Flood Insurance Rate Map (Community–Panel Number 42041C0287E, Zone A, dated March 16, 2009). The current study is a Zone A non–detailed study area with no base flood elevation information.
5. This plan depicts street right of way and Open Space Lot OS–4 created with the previously approved Phase II Final Plan; no Phase II improvements have been installed.

PHASE II STREET RIGHT OF WAY LINE TABLE

Line	Length	Bearing
R1	164.96	S 2°9'39" W
R2	118.86	S 5°49'22" W
R3	46.80	S 2°9'39" W
R4	50.00	N 87°50'21" W
R5	73.00	N 2°9'39" E
R6	21.07	N 87°50'21" W
R7	395.51	S 74°13'43" W
R8	13.27	N 67°58'31" W
R9	35.92	S 35°7'20" W
R10	50.00	N 54°52'40" W
R11	35.92	N 35°7'20" E
R12	127.08	N 18°35'51" E
R13	50.19	N 71°24'9" W
R14	95.01	N 41°16'43" W
R15	195.12	N 75°28'4" W
R16	50.00	N 52°37'3" W
R17	195.12	S 75°28'4" E
R18	95.01	S 41°16'43" E
R19	42.19	S 71°24'9" E
R20	102.62	N 18°35'51" E
R21	122.85	S 18°35'51" W
R22	144.69	S 21°39'1" W
R23	32.68	S 18°36'57" W
R24	12.28	S 67°58'31" E
R25	395.51	N 74°13'43" E
R26	13.07	S 87°50'21" E
R27	165.85	N 2°9'39" E
R28	120.00	S 87°59'6" E
R29	44.34	N 2°9'39" E
R30	50.00	S 87°50'21" E
R31	2.06	S 2°9'39" W
R32	2.06	N 35°7'20" E
R33	50.00	S 54°52'40" E
R34	44.34	S 35°7'20" W
R35	50.00	S 52°37'3" E

PHASE II STREET RIGHT OF WAY CURVE TABLE

Curve	Length	Radius	Chord Dir	Chord Len
RC1	42.34	27.00	S 47°5'17" W	38.14
RC2	6.90	108.00	N 3°59'31" E	6.90
RC3	5.88	92.00	S 3°59'31" W	5.88
RC4	42.41	27.00	N 42°50'21" W	38.18
RC5	54.77	175.00	S 83°11'41" W	54.55
RC6	115.44	175.00	S 86°52'24" E	113.36
RC7	38.91	27.00	S 70°44'27" W	35.63
RC8	37.08	375.00	N 32°17'22" E	37.06
RC9	93.73	325.00	N 26°51'35" E	93.41
RC10	42.41	27.00	N 26°24'9" W	38.18
RC11	92.01	175.00	S 56°20'26" E	90.95
RC12	193.93	325.00	N 58°22'24" W	191.07
RC13	263.70	225.00	S 70°57'26" W	248.86
RC14	322.30	275.00	S 70°57'26" W	304.16
RC15	223.77	375.00	N 58°22'24" W	220.46
RC16	65.72	125.00	S 56°20'26" E	64.97
RC17	42.41	27.00	N 63°35'51" E	38.18
RC18	38.96	27.00	N 22°44'31" W	35.67
RC19	111.55	330.00	S 73°45'55" E	111.02
RC20	36.73	27.00	S 57°34'27" W	33.97
RC21	5.75	108.00	N 20°7'26" E	5.75
RC22	4.87	92.00	S 20°7'59" W	4.87
RC23	40.80	27.00	S 24°41'20" E	37.02
RC24	82.46	125.00	S 86°52'24" E	80.97
RC25	70.42	225.00	S 83°11'41" W	70.13
RC26	42.41	27.00	N 47°9'39" E	38.18
RC27	42.48	27.00	N 42°54'43" W	38.23
RC28	9.89	7.00	S 38°17'48" E	9.08
RC29	241.88	50.00	N 59°50'0" E	66.15
RC30	241.88	50.00	S 22°33'1" E	66.15
RC31	9.89	7.00	N 75°34'47" E	9.08
RC32	10.20	275.00	S 36°19'11" W	10.20
RC33	2.23	225.00	S 37°5'56" W	2.23
RC34	10.55	10.00	S 6°35'21" W	10.07
RC35	251.54	50.00	S 59°30'44" E	58.60
RC36	8.61	10.00	N 59°56'5" E	8.35

Phase II Residual Tract Property Line Table

Line	Length	Bearing
EL1	103.76	N 86°39'48" E
EL2	128.06	S 70°34'15" E
EL3	47.82	S 58°33'5" E
EL4	107.99	S 46°44'0" E
EL5	105.35	S 89°58'9" E
EL6	106.94	S 85°33'17" E
EL7	310.90	S 87°59'6" E
EL8	228.00	S 88°33'12" E
EL9	101.72	N 83°3'45" E
EL10	42.63	N 85°40'41" E
EL11	364.69	S 29°46'11" W
EL12	1498.97	S 41°59'18" W
EL13	868.85	N 65°9'27" W
EL14	173.79	N 27°0'30" W
EL15	642.50	N 25°22'37" W
EL16	1566.92	N 26°19'7" E
EL17	54.39	N 89°3'10" E

Phase II Residual Tract Property Line Curve Table

Curve	Length	Radius	Chord Dir	Chord Len
EC1	156.95	395.00	N 81°57'13" W	155.92
EC2	203.49	970.00	N 64°33'40" W	203.11
EC3	55.69	270.00	N 52°38'32" W	55.59
EC4	249.02	330.00	S 68°21'5" E	243.15
EC5	20.80	270.00	N 87°45'43" W	20.80
EC6	14.00	330.00	S 86°46'11" E	14.00
EC7	179.99	1230.00	N 87°15'17" E	179.83
EC8	21.46	470.00	S 84°22'13" W	21.45
EC9	878.28	3927.57	N 36°13'4" E	876.45
EC10	13.76	330.00	N 87°51'29" E	13.76

DATE

REVISIONS

1.
2.
3.
4.
5.
6.
7.
8.
9.

MELLOTT ENGINEERING, INC.
Civil Engineering • Land Planning & Development • Water Resources
7500 Devonshire Heights Road • Hummelstown, PA 17036
mellotteng@comcast.net
717–566–6533

EXISTING RESOURCES AND SITE ANALYSIS PLAN
FOR
AUTUMN CHASE PRD – PHASE V
Land Developer: Hertzler Road Associates, L.P.
UPPER ALLEN TOWNSHIP CUMBERLAND COUNTY PENNSYLVANIA

Project No. 202236
Date February 1, 2023

Sheet No.
3 of 21

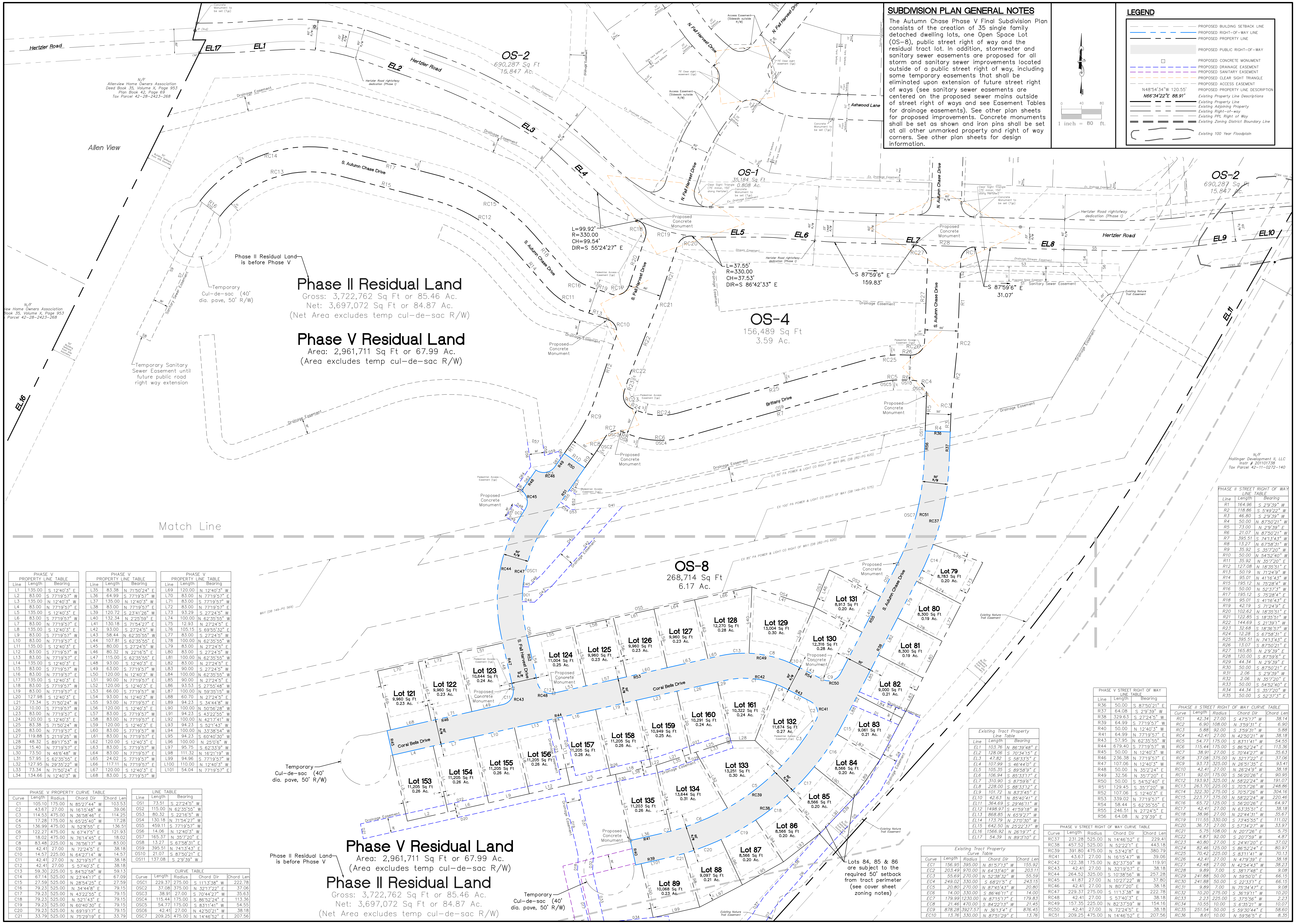
Hertzler Road
Allen View
N/F Allenview Home Owners Association Deed Book 35, Volume K, Page 953 Plan Book 42, Page 69 Tax Parcel 42-28-2423-268
OS-2 690,287 Sq Ft 15.847 Ac.
OS-1 35,184 Sq Ft 0.808 Ac.
OS-4 156,489 Sq Ft 3.59 Ac.
OS-8 268,714 Sq Ft 6.17 Ac.
Phase II Residual Land
Gross: 3,722,762 Sq Ft or 85.46 Ac.
Net: 3,697,072 Sq Ft or 84.87 Ac.
(Net Area excludes temp cul-de-sac R/W)
Phase V Residual Land
Area: 2,961,711 Sq Ft or 67.99 Ac.
(Area excludes temp cul-de-sac R/W)
Phase II Residual Land is before Phase V
Temporary Cul-de-sac (40' dia. pave, 50' R/W)
Temporary Sanitary Sewer Easement until future public road right way extension
S. Autumn Chase Drive
N. Fall Harvest Drive
S. Fall Harvest Drive
N. Autumn Chase Drive
Brittany Drive
Coral Bells Drive
Ashwood Lane
L=99.92' R=330.00 CH=99.54' DIR=S 55°24'27" E
L=37.55' R=330.00 CH=37.53' DIR=S 86°42'33" E
S 87°59'6" E 159.83'
S 87°59'6" E 31.07'
Hertzler Road rightofway dedication (Phase I)
Proposed Concrete Monument
Drainage Easement
Sanitary Sewer Easement
Match Line
N/F Hollinger Development II, LLC Instr # 201101738 Tax Parcel 42-11-0272-140
Lot 79 8,783 Sq Ft 0.20 Ac.
Lot 80 8,300 Sq Ft 0.19 Ac.
Lot 81 8,300 Sq Ft 0.19 Ac.
Lot 82 9,000 Sq Ft 0.21 Ac.
Lot 83 9,061 Sq Ft 0.21 Ac.
Lot 84 8,566 Sq Ft 0.20 Ac.
Lot 85 8,566 Sq Ft 0.20 Ac.
Lot 86 8,566 Sq Ft 0.20 Ac.
Lot 87 8,566 Sq Ft 0.20 Ac.
Lot 88 9,097 Sq Ft 0.21 Ac.
Lot 89 10,068 Sq Ft 0.23 Ac.
Lot 121 9,960 Sq Ft 0.23 Ac.
Lot 122 9,960 Sq Ft 0.23 Ac.
Lot 123 10,644 Sq Ft 0.24 Ac.
Lot 124 11,004 Sq Ft 0.25 Ac.
Lot 125 9,960 Sq Ft 0.23 Ac.
Lot 126 9,960 Sq Ft 0.23 Ac.
Lot 127 9,960 Sq Ft 0.23 Ac.
Lot 128 12,270 Sq Ft 0.28 Ac.
Lot 129 13,004 Sq Ft 0.30 Ac.
Lot 130 12,316 Sq Ft 0.28 Ac.
Lot 131 8,913 Sq Ft 0.20 Ac.
Lot 132 11,674 Sq Ft 0.27 Ac.
Lot 133 13,251 Sq Ft 0.30 Ac.
Lot 134 13,644 Sq Ft 0.31 Ac.
Lot 135 11,203 Sq Ft 0.26 Ac.
Lot 153 11,205 Sq Ft 0.26 Ac.
Lot 154 11,205 Sq Ft 0.26 Ac.
Lot 155 11,205 Sq Ft 0.26 Ac.
Lot 156 11,205 Sq Ft 0.26 Ac.
Lot 157 11,205 Sq Ft 0.26 Ac.
Lot 158 11,205 Sq Ft 0.26 Ac.
Lot 159 10,949 Sq Ft 0.25 Ac.
Lot 160 10,291 Sq Ft 0.24 Ac.
Lot 161 10,322 Sq Ft 0.24 Ac.
Lots 84, 85 & 86 are subject to the required 50' setback from tract perimeter (see cover sheet zoning notes)
Existing Nature Trail Easement
1 inch = 80 ft.

SUBDIVISION PLAN GENERAL NOTES

The Autumn Chase Phase V Final Subdivision Plan consists of the creation of 35 single family detached dwelling lots, one Open Space Lot (OS-8), public street right of way and the residual tract lot. In addition, stormwater and sanitary sewer easements are proposed for all storm and sanitary sewer improvements located outside of a public street right of way, including some temporary easements that shall be eliminated upon extension of future street right of ways (see sanitary sewer easements are centered on the proposed sewer mains outside of street right of ways and see Easement Tables for drainage easements). See other plan sheets for proposed improvements. Concrete monuments shall be set as shown and iron pins shall be set at all other unmarked property and right of way corners. See other plan sheets for design information.

LEGEND

— — — —	PROPOSED BUILDING SETBACK LINE
— — — —	PROPOSED RIGHT-OF-WAY LINE
— — — —	PROPOSED PROPERTY LINE
▨	PROPOSED PUBLIC RIGHT-OF-WAY
⊡	PROPOSED CONCRETE MONUMENT
— — — —	PROPOSED DRAINAGE EASEMENT
— — — —	PROPOSED SANITARY EASEMENT
— — — —	PROPOSED CLEAR SIGHT TRIANGLE
— — — —	PROPOSED ACCESS EASEMENT
N48°54'34"W 120.55'	PROPOSED PROPERTY LINE DESCRIPTION
N66°34'22"E 88.91'	*Existing Property Line Descriptions*
— — — —	*Existing Property Line*
— — — —	*Existing Adjoining Property*
— — — —	*Existing Right-of-way*
— — — —	*Existing PPL Right of Way*
— — — —	*Existing Zoning District Boundary Line*
— — — —	*Existing 100 Year Floodplain*

PHASE V PROPERTY LINE TABLE

Line	Length	Bearing
L1	135.00	S 12°40'3" E
L2	83.00	S 77°19'57" W
L3	135.00	N 12°40'3" W
L4	83.00	N 77°19'57" E
L5	135.00	S 12°40'3" E
L6	83.00	S 77°19'57" W
L7	83.00	N 77°19'57" E
L8	135.00	S 12°40'3" E
L9	83.00	S 77°19'57" W
L10	83.00	N 77°19'57" E
L11	135.00	S 12°40'3" E
L12	83.00	S 77°19'57" W
L13	83.00	N 77°19'57" E
L14	135.00	S 12°40'3" E
L15	83.00	S 77°19'57" W
L16	83.00	N 77°19'57" E
L17	135.00	S 12°40'3" E
L18	83.00	S 77°19'57" W
L19	83.00	N 77°19'57" E
L20	127.98	S 12°40'3" E
L21	73.34	S 71°50'24" W
L22	10.00	S 77°19'57" W
L23	83.00	N 77°19'57" E
L24	120.00	S 12°40'3" E
L25	83.38	S 71°50'24" W
L26	83.00	N 77°19'57" E
L27	119.88	S 21°19'25" W
L28	48.32	S 89°17'53" W
L29	15.40	N 77°19'57" E
L30	73.50	N 46°6'48" W
L31	57.95	S 62°35'55" E
L32	127.95	N 29°35'22" W
L33	73.34	N 71°50'24" E
L34	134.66	N 12°40'3" W
L35	83.38	N 71°50'24" E
L36	64.99	S 77°19'57" W
L37	135.00	N 12°40'3" W
L38	83.00	N 77°19'57" E
L39	120.72	S 23°41'26" W
L40	132.34	N 2°25'59" E
L41	130.18	S 71°54'27" E
L42	93.00	S 27°24'5" W
L43	58.44	N 62°35'55" W
L44	107.81	S 62°35'55" E
L45	80.00	S 27°24'5" W
L46	80.32	N 22°16'5" E
L47	115.00	S 62°35'55" E
L48	93.00	S 12°40'3" E
L49	63.00	S 77°19'57" W
L50	120.00	N 12°40'3" W
L51	90.00	N 77°19'57" E
L52	120.00	S 12°40'3" E
L53	66.00	S 77°19'57" W
L54	93.00	N 12°40'3" W
L55	93.00	N 77°19'57" E
L56	120.00	S 12°40'3" E
L57	83.00	S 77°19'57" W
L58	83.00	N 77°19'57" E
L59	120.00	S 12°40'3" E
L60	83.00	S 77°19'57" W
L61	83.00	N 77°19'57" E
L62	120.00	S 12°40'3" E
L63	83.00	S 77°19'57" W
L64	83.00	N 77°19'57" E
L65	24.02	S 77°19'57" W
L66	117.11	N 77°19'57" E
L67	120.00	S 12°40'3" E
L68	83.00	S 77°19'57" W
L69	120.00	N 12°40'3" W
L70	83.00	N 77°19'57" E
L71	83.00	S 77°19'57" W
L72	83.00	N 77°19'57" E
L73	93.29	S 27°24'5" W
L74	100.00	N 62°35'55" W
L75	12.93	N 27°24'5" E
L76	105.15	S 69°55'32" E
L77	83.00	S 27°24'5" W
L78	100.00	N 62°35'55" W
L79	83.00	N 27°24'5" E
L80	83.00	S 27°24'5" W
L81	100.00	N 62°35'55" W
L82	83.00	N 27°24'5" E
L83	90.00	S 27°24'5" W
L84	100.00	N 62°35'55" W
L85	90.00	N 27°24'5" E
L86	93.53	S 27°55'48" W
L87	100.00	N 59°35'15" W
L88	60.70	N 27°24'5" E
L89	94.23	S 34°44'8" W
L90	100.00	N 50°56'28" W
L91	94.23	S 43°22'55" W
L92	100.00	N 42°17'41" W
L93	94.23	S 52°1'43" W
L94	100.00	N 33°38'54" W
L95	94.23	S 60°40'30" W
L96	100.00	N 25°0'6" W
L97	95.75	S 62°33'9" W
L98	111.32	N 16°21'19" W
L99	94.96	S 77°19'57" W
L100	110.00	N 12°40'3" W
L101	54.04	N 77°19'57" E

PHASE V PROPERTY CURVE TABLE

Curve	Length	Radius	Chord Dir	Chord Len
C1	105.10	175.00	N 85°27'44" W	103.53
C2	43.67	27.00	N 16°15'48" W	39.06
C3	114.53	475.00	N 36°58'46" E	114.25
C4	17.28	175.00	N 65°25'40" W	17.28
C5	136.99	475.00	N 52°8'55" E	136.51
C6	122.27	475.00	N 67°47'5" E	121.93
C7	18.02	475.00	N 76°14'45" E	18.02
C8	83.48	225.00	N 76°56'17" W	83.00
C9	42.41	27.00	N 72°24'5" E	38.18
C10	14.57	225.00	N 64°27'14" W	14.57
C11	42.41	27.00	N 32°19'57" E	38.18
C12	42.41	27.00	S 57°40'3" E	38.18
C13	59.30	225.00	S 84°52'58" W	59.13
C14	67.14	525.00	N 23°44'17" E	67.09
C15	27.59	525.00	N 28°54'25" E	27.59
C16	79.23	525.00	N 34°44'8" E	79.15
C17	79.23	525.00	N 43°22'55" E	79.15
C18	79.23	525.00	N 52°1'43" E	79.15
C19	79.23	525.00	N 60°40'30" E	79.15
C20	79.23	525.00	N 69°19'17" E	79.15
C21	33.79	525.00	N 75°29'19" E	33.79

LINE TABLE

Line	Length	Bearing
OS1	73.51	S 27°24'5" W
OS2	115.00	N 62°35'55" W
OS3	80.32	S 22°16'5" W
OS4	130.18	N 71°54'27" W
OS5	459.11	S 77°19'57" W
OS6	14.06	N 12°40'3" W
OS7	165.37	N 35°7'20" E
OS8	13.27	S 67°58'31" E
OS9	395.51	N 74°13'43" E
OS10	21.07	S 87°50'21" E
OS11	137.08	S 2°9'39" W

CURVE TABLE

Curve	Length	Radius	Chord Dir	Chord Len
OSC1	229.37	275.00	S 11°13'38" W	222.78
OSC2	37.08	375.00	N 32°17'22" E	37.06
OSC3	38.91	27.00	S 70°44'27" W	35.63
OSC4	115.44	175.00	S 86°52'24" E	113.36
OSC5	54.77	175.00	S 83°11'41" W	54.55
OSC6	42.41	27.00	N 42°50'21" W	38.18
OSC7	209.25	475.00	N 14°46'52" E	207.56

Existing Tract Property Line Table

Line	*Length*	*Bearing*
EL1	*103.76*	*N 86°39'48" E*
EL2	*128.06*	*S 70°34'15" E*
EL3	*47.82*	*S 58°33'5" E*
EL4	*107.99*	*S 46°44'0" E*
EL5	*105.35*	*S 89°58'9" E*
EL6	*106.94*	*S 85°33'17" E*
EL7	*310.90*	*S 87°59'6" E*
EL8	*228.00*	*S 88°33'12" E*
EL9	*101.72*	*N 83°3'45" E*
EL10	*42.63*	*N 85°40'41" E*
EL11	*364.69*	*S 29°46'11" W*
EL12	*1498.97*	*S 41°59'18" W*
EL13	*868.85*	*N 65°9'27" W*
EL14	*173.79*	*N 27°0'30" W*
EL15	*642.50*	*N 25°22'37" W*
EL16	*1566.92*	*N 26°19'7" E*
EL17	*54.39*	*N 89°3'10" E*

Existing Tract Property Curve Table

Curve	*Length*	*Radius*	*Chord Dir*	*Chord Len*
EC1	*156.95*	*395.00*	*N 81°57'13" W*	*155.92*
EC2	*203.49*	*970.00*	*N 64°33'40" W*	*203.11*
EC3	*55.69*	*270.00*	*N 52°38'32" W*	*55.59*
EC4	*249.02*	*330.00*	*S 68°21'5" E*	*243.15*
EC5	*20.80*	*270.00*	*N 87°45'43" W*	*20.80*
EC6	*14.00*	*330.00*	*S 86°46'11" E*	*14.00*
EC7	*179.99*	*1230.00*	*N 87°15'17" E*	*179.83*
EC8	*21.46*	*470.00*	*S 84°22'13" W*	*21.45*
EC9	*878.28*	*3927.57*	*N 36°13'4" E*	*876.45*
EC10	*13.76*	*330.00*	*N 87°51'29" E*	*13.76*

PHASE V STREET RIGHT OF WAY LINE TABLE

Line	Length	Bearing
R36	50.00	S 87°50'21" E
R37	64.08	S 2°9'39" W
R38	329.63	S 27°24'5" W
R39	64.99	S 77°19'57" W
R40	50.00	N 12°40'3" W
R41	64.99	N 77°19'57" E
R43	57.95	N 62°35'55" W
R44	679.40	S 77°19'57" W
R45	50.00	N 12°40'3" W
R46	236.38	N 77°19'57" E
R47	107.06	N 12°40'3" W
R48	50.00	N 35°2'24" E
R49	32.56	N 35°7'20" E
R50	50.00	S 54°52'40" E
R51	129.45	S 35°7'20" W
R52	107.06	S 12°40'3" E
R53	339.02	N 77°19'57" E
R54	58.44	S 62°35'55" E
R55	246.51	N 27°24'5" E
R56	64.08	N 2°9'39" E

PHASE V STREET RIGHT OF WAY CURVE TABLE

Curve	Length	Radius	Chord Dir	Chord Len
RC37	231.28	525.00	N 14°46'52" E	229.41
RC38	457.52	525.00	N 52°22'1" E	443.18
RC39	391.80	475.00	N 53°42'8" E	380.79
RC41	43.67	27.00	N 16°15'47" W	39.06
RC42	122.38	175.00	N 82°37'59" W	119.91
RC43	42.41	27.00	N 32°19'57" E	38.18
RC44	264.52	325.00	S 10°38'56" W	257.28
RC45	41.87	27.00	N 10°27'22" W	37.80
RC46	42.41	27.00	N 80°7'20" E	38.18
RC47	229.37	275.00	S 11°13'38" W	222.78
RC48	42.41	27.00	S 57°40'3" E	38.18
RC49	157.35	225.00	N 82°37'59" W	154.16
RC50	42.41	27.00	N 72°24'5" E	38.18
RC51	209.25	475.00	N 14°46'52" E	207.56

PHASE II STREET RIGHT OF WAY LINE TABLE

Line	*Length*	*Bearing*
R1	*164.96*	*S 2°9'39" W*
R2	*118.86*	*S 5°49'22" W*
R3	*46.80*	*S 2°9'39" W*
R4	*50.00*	*N 87°50'21" W*
R5	*73.00*	*N 2°9'39" E*
R6	*21.07*	*N 87°50'21" W*
R7	*395.51*	*S 74°13'43" W*
R8	*13.27*	*N 67°58'31" W*
R9	*35.92*	*S 35°7'20" W*
R10	*50.00*	*N 54°52'40" W*
R11	*35.92*	*N 35°7'20" E*
R12	*127.08*	*N 18°35'51" E*
R13	*50.19*	*N 71°24'9" W*
R14	*95.01*	*N 41°16'43" W*
R15	*195.12*	*N 75°28'4" W*
R16	*50.00*	*N 52°37'3" W*
R17	*195.12*	*S 75°28'4" E*
R18	*95.01*	*S 41°16'43" E*
R19	*42.19*	*S 71°24'9" E*
R20	*102.62*	*N 18°35'51" E*
R21	*122.85*	*S 18°35'51" W*
R22	*144.69*	*S 21°39'1" W*
R23	*32.68*	*S 18°36'57" W*
R24	*12.28*	*S 67°58'31" E*
R25	*395.51*	*N 74°13'43" E*
R26	*13.07*	*S 87°50'21" E*
R27	*165.85*	*N 2°9'39" E*
R28	*120.00*	*S 87°59'6" E*
R29	*44.34*	*N 2°9'39" E*
R30	*50.00*	*S 87°50'21" E*
R31	*2.06*	*S 2°9'39" W*
R32	*2.06*	*N 35°7'20" E*
R33	*50.00*	*S 54°52'40" E*
R34	*44.34*	*S 35°7'20" W*
R35	*50.00*	*S 52°37'3" E*

PHASE II STREET RIGHT OF WAY CURVE TABLE

Curve	*Length*	*Radius*	*Chord Dir*	*Chord Len*
RC1	*42.34*	*27.00*	*S 47°5'17" W*	*38.14*
RC2	*6.90*	*108.00*	*N 3°59'31" E*	*6.90*
RC3	*5.88*	*92.00*	*S 3°59'31" W*	*5.88*
RC4	*42.41*	*27.00*	*N 42°50'21" W*	*38.18*
RC5	*54.77*	*175.00*	*S 83°11'41" W*	*54.55*
RC6	*115.44*	*175.00*	*S 86°52'24" E*	*113.36*
RC7	*38.91*	*27.00*	*S 70°44'27" W*	*35.63*
RC8	*37.08*	*375.00*	*N 32°17'22" E*	*37.06*
RC9	*93.73*	*325.00*	*N 26°51'35" E*	*93.41*
RC10	*42.41*	*27.00*	*N 26°24'9" W*	*38.18*
RC11	*92.01*	*175.00*	*S 56°20'26" E*	*90.95*
RC12	*193.93*	*325.00*	*N 58°22'24" W*	*191.07*
RC13	*263.70*	*225.00*	*S 70°57'26" W*	*248.86*
RC14	*322.30*	*275.00*	*S 70°57'26" W*	*304.16*
RC15	*223.77*	*375.00*	*N 58°22'24" W*	*220.46*
RC16	*65.72*	*125.00*	*S 56°20'26" E*	*64.97*
RC17	*42.41*	*27.00*	*N 63°35'51" E*	*38.18*
RC18	*38.96*	*27.00*	*N 22°44'31" W*	*35.67*
RC19	*111.55*	*330.00*	*S 73°45'55" E*	*111.02*
RC20	*36.73*	*27.00*	*S 57°34'27" W*	*33.97*
RC21	*5.75*	*108.00*	*N 20°7'26" E*	*5.75*
RC22	*4.87*	*92.00*	*S 20°7'59" W*	*4.87*
RC23	*40.80*	*27.00*	*S 24°41'20" E*	*37.02*
RC24	*82.46*	*125.00*	*S 86°52'24" E*	*80.97*
RC25	*70.42*	*225.00*	*S 83°11'41" W*	*70.13*
RC26	*42.41*	*27.00*	*N 47°9'39" E*	*38.18*
RC27	*42.48*	*27.00*	*N 42°54'43" W*	*38.23*
RC28	*9.89*	*7.00*	*S 38°17'48" E*	*9.08*
RC29	*241.88*	*50.00*	*N 59°50'0" E*	*66.15*
RC30	*241.88*	*50.00*	*S 22°33'1" E*	*66.15*
RC31	*9.89*	*7.00*	*N 75°34'47" E*	*9.08*
RC32	*10.20*	*275.00*	*S 36°19'11" W*	*10.20*
RC33	*2.23*	*225.00*	*S 37°5'56" W*	*2.23*
RC34	*10.55*	*10.00*	*S 6°35'21" W*	*10.07*
RC35	*251.54*	*50.00*	*S 59°30'44" E*	*58.60*
RC36	*8.61*	*10.00*	*N 59°56'5" E*	*8.35*

	REVISIONS	DATE
1.	PPL Utility Pole location updates (PPL replaced existing poles)	2-17-2023
2.	Addressing Review Comments	3-7-2023
3.	Addressing Sanitary Sewer Comments	5-22-2023
4.	Addressing Review Comments	11-16-2023
5.	Added conditions notes to cover, setback notes to sheets 4 & 5 & shifted trees	1-4-2024
6.	–	–
7.	–	–
8.	–	–
9.	–	–

M:\Drawings\2022\202236 Autumn Chase V\202236 SUB.dwg 1/4/2024 11:26:42 AM EST

MELLOTT ENGINEERING, INC.
Civil Engineering • Land Planning & Development • Water Resources
7500 Devonshire Heights Road • Hummelstown, PA 17036
mellotteng@comcast.net
717-566-6533

FINAL SUBDIVISION PLAN
FOR
AUTUMN CHASE PRD - PHASE V
Land Developer: Hertzler Road Associates, L.P.
UPPER ALLEN TOWNSHIP
CUMBERLAND COUNTY
PENNSYLVANIA

Project No. 202236
Date February 1, 2023

Sheet No.
4 of 21

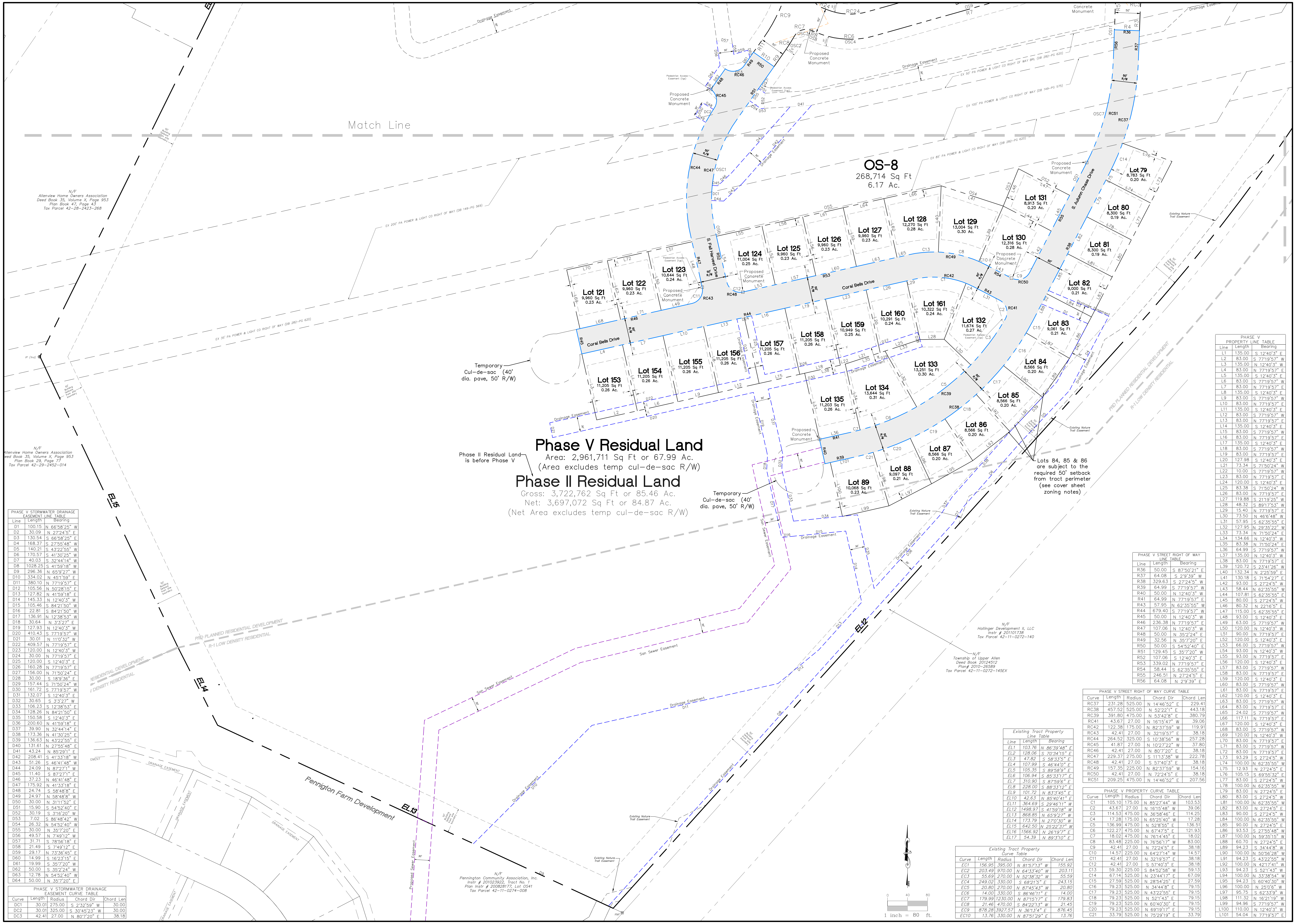
Match Line
OS-8
268,714 Sq Ft
6.17 Ac.
Phase V Residual Land
Area: 2,961,711 Sq Ft or 67.99 Ac.
(Area excludes temp cul-de-sac R/W)
Phase II Residual Land
Gross: 3,722,762 Sq Ft or 85.46 Ac.
Net: 3,697,072 Sq Ft or 84.87 Ac.
(Net Area excludes temp cul-de-sac R/W)
Phase II Residual Land is before Phase V
Temporary Cul-de-sac (40' dia. pave, 50' R/W)
Coral Bells Drive
S. Fall Harvest Drive
S. Autumn Chase Drive
Lot 79 8,783 Sq Ft 0.20 Ac.
Lot 80 8,300 Sq Ft 0.19 Ac.
Lot 81 8,300 Sq Ft 0.19 Ac.
Lot 82 9,000 Sq Ft 0.21 Ac.
Lot 83 9,061 Sq Ft 0.21 Ac.
Lot 84 8,566 Sq Ft 0.20 Ac.
Lot 85 8,566 Sq Ft 0.20 Ac.
Lot 86 8,566 Sq Ft 0.20 Ac.
Lot 87 8,566 Sq Ft 0.20 Ac.
Lot 88 9,097 Sq Ft 0.21 Ac.
Lot 89 10,068 Sq Ft 0.23 Ac.
Lot 121 9,960 Sq Ft 0.23 Ac.
Lot 122 9,960 Sq Ft 0.23 Ac.
Lot 123 10,644 Sq Ft 0.24 Ac.
Lot 124 11,004 Sq Ft 0.25 Ac.
Lot 125 9,960 Sq Ft 0.23 Ac.
Lot 126 9,960 Sq Ft 0.23 Ac.
Lot 127 9,960 Sq Ft 0.23 Ac.
Lot 128 12,270 Sq Ft 0.28 Ac.
Lot 129 13,004 Sq Ft 0.30 Ac.
Lot 130 12,316 Sq Ft 0.28 Ac.
Lot 131 8,913 Sq Ft 0.20 Ac.
Lot 132 11,674 Sq Ft 0.27 Ac.
Lot 133 13,251 Sq Ft 0.30 Ac.
Lot 134 13,644 Sq Ft 0.31 Ac.
Lot 135 11,203 Sq Ft 0.26 Ac.
Lot 153 11,205 Sq Ft 0.26 Ac.
Lot 154 11,205 Sq Ft 0.26 Ac.
Lot 155 11,205 Sq Ft 0.26 Ac.
Lot 156 11,205 Sq Ft 0.26 Ac.
Lot 157 11,205 Sq Ft 0.26 Ac.
Lot 158 11,205 Sq Ft 0.26 Ac.
Lot 159 10,949 Sq Ft 0.25 Ac.
Lot 160 10,291 Sq Ft 0.24 Ac.
Lot 161 10,322 Sq Ft 0.24 Ac.
Proposed Concrete Monument
Drainage Easement
San. Sewer Easement
Existing Nature Trail Easement
Lots 84, 85 & 86 are subject to the required 50' setback from tract perimeter (see cover sheet zoning notes)
N/F Allenview Home Owners Association Deed Book 35, Volume X, Page 953 Plan Book 47, Page 43 Tax Parcel 42-28-2423-268
N/F Allenview Home Owners Association Deed Book 35, Volume X, Page 953 Plan Book 29, Page 77 Tax Parcel 42-29-2452-014
N/F Hollinger Development II, LLC Instr # 201107138 Tax Parcel 42-11-0272-140
N/F Township of Upper Allen Deed Book 20124512 Plan# 2010-26589 Tax Parcel 42-11-0272-145EX
N/F Pennington Community Association, Inc. Instr # 201023922, Tract No. 1 Instr # 200828177, Lot OS41 Tax Parcel 42-11-0274-008
Pennington Farm Development
PRD PLANNED RESIDENTIAL DEVELOPMENT
R-1 LOW DENSITY RESIDENTIAL
EL12
EL13
EL14
EL15
1 inch = 80 ft.

PHASE V STORMWATER DRAINAGE EASEMENT LINE TABLE		
Line	Length	Bearing
D1	100.15	N 66°58'25" W
D2	30.09	N 27°24'5" E
D3	130.54	S 66°58'25" E
D4	168.37	S 27°55'48" W
D5	140.21	S 43°22'55" W
D6	170.57	S 41°30'25" W
D7	40.03	S 32°44'14" W
D8	1028.25	S 41°59'18" W
D9	296.36	N 65°9'27" W
D10	334.02	N 45°1'59" E
D11	380.10	N 77°19'57" E
D12	105.56	N 50°28'15" E
D13	127.82	N 41°59'18" E
D14	145.33	N 12°40'3" W
D15	105.46	S 84°21'50" W
D16	22.81	S 84°21'50" W
D17	136.91	N 12°38'53" W
D18	30.64	N 3°3'27" E
D19	127.93	N 12°40'3" W
D20	410.43	S 77°19'57" W
D21	30.01	N 11°0'32" W
D22	409.57	N 77°19'57" E
D23	120.00	N 12°40'3" W
D24	30.00	N 77°19'57" E
D25	120.00	S 12°40'3" E
D26	160.28	N 77°19'57" E
D27	156.00	N 71°50'24" E
D28	30.00	S 18°9'36" E
D29	157.44	S 71°50'24" W
D30	161.72	S 77°19'57" W
D31	132.07	S 12°40'3" E
D32	30.65	S 3°3'27" W
D33	106.23	S 12°38'53" E
D34	128.26	N 84°21'50" E
D35	150.58	S 12°40'3" E
D36	200.60	N 41°59'18" E
D37	39.90	N 32°44'14" E
D38	173.36	N 41°30'25" E
D39	136.63	N 43°22'55" E
D40	131.61	N 27°55'48" E
D41	43.24	N 85°29'1" E
D42	208.41	S 41°33'18" W
D43	51.26	S 46°41'48" W
D44	24.09	N 87°27'1" W
D45	11.40	S 87°27'1" E
D46	37.23	N 46°41'48" E
D47	175.92	N 41°33'18" E
D48	24.74	S 58°48'8" E
D49	24.97	N 58°48'8" W
D50	30.00	N 31°11'52" E
D51	15.90	S 54°52'40" E
D52	30.19	S 3°16'20" W
D53	7.02	S 86°48'42" W
D54	26.32	N 54°52'40" W
D55	30.00	N 35°7'20" E
D56	49.57	N 7°49'12" W
D57	31.71	S 78°56'18" E
D58	21.49	S 7°49'12" E
D59	29.17	N 73°36'45" E
D60	14.99	S 16°23'15" E
D61	19.99	S 35°7'20" W
D62	50.00	S 35°2'24" W
D63	12.78	N 54°52'40" W
D64	50.00	N 35°7'20" E

PHASE V STORMWATER DRAINAGE EASEMENT CURVE TABLE				
Curve	Length	Radius	Chord Dir	Chord Len
DC1	30.01	275.00	S 2°32'59" W	30.00
DC2	30.01	325.00	S 30°45'23" W	30.00
DC3	42.41	27.00	N 80°7'20" E	38.18

Existing Tract Property Line Table

Line	*Length*	*Bearing*
EL1	*103.76*	*N 86°39'48" E*
EL2	*128.06*	*S 70°34'15" E*
EL3	*47.82*	*S 58°33'5" E*
EL4	*107.99*	*S 46°44'0" E*
EL5	*105.35*	*S 89°58'9" E*
EL6	*106.94*	*S 85°33'17" E*
EL7	*310.90*	*S 87°59'6" E*
EL8	*228.00*	*S 88°33'12" E*
EL9	*101.72*	*N 83°3'45" E*
EL10	*42.63*	*N 85°40'41" E*
EL11	*364.69*	*S 29°46'11" W*
EL12	*1498.97*	*S 41°59'18" W*
EL13	*868.85*	*N 65°9'27" W*
EL14	*173.79*	*N 27°0'30" W*
EL15	*642.50*	*N 25°22'37" W*
EL16	*1566.92*	*N 26°19'7" E*
EL17	*54.39*	*N 89°3'10" E*

Existing Tract Property Curve Table

Curve	*Length*	*Radius*	*Chord Dir*	*Chord Len*
EC1	*156.95*	*395.00*	*N 81°57'13" W*	*155.92*
EC2	*203.49*	*970.00*	*N 64°33'40" W*	*203.11*
EC3	*55.69*	*270.00*	*N 52°38'32" W*	*55.59*
EC4	*249.02*	*330.00*	*S 68°21'5" E*	*243.15*
EC5	*20.80*	*270.00*	*N 87°45'43" W*	*20.80*
EC6	*14.00*	*330.00*	*S 86°46'11" E*	*14.00*
EC7	*179.99*	*1230.00*	*N 87°15'17" E*	*179.83*
EC8	*21.46*	*470.00*	*S 84°22'13" W*	*21.45*
EC9	*878.28*	*3927.57*	*N 36°13'4" E*	*876.45*
EC10	*13.76*	*330.00*	*N 87°51'29" E*	*13.76*

PHASE V STREET RIGHT OF WAY LINE TABLE		
Line	Length	Bearing
R36	50.00	S 87°50'21" E
R37	64.08	S 2°9'39" W
R38	329.63	S 27°24'5" W
R39	64.99	S 77°19'57" W
R40	50.00	N 12°40'3" W
R41	64.99	N 77°19'57" E
R43	57.95	N 62°35'55" W
R44	679.40	S 77°19'57" W
R45	50.00	N 12°40'3" W
R46	236.38	N 77°19'57" E
R47	107.06	N 12°40'3" W
R48	50.00	N 35°2'24" E
R49	32.56	N 35°7'20" E
R50	50.00	S 54°52'40" E
R51	129.45	S 35°7'20" W
R52	107.06	S 12°40'3" E
R53	339.02	N 77°19'57" E
R54	58.44	S 62°35'55" E
R55	246.51	N 27°24'5" E
R56	64.08	N 2°9'39" E

PHASE V STREET RIGHT OF WAY CURVE TABLE				
Curve	Length	Radius	Chord Dir	Chord Len
RC37	231.28	525.00	N 14°46'52" E	229.41
RC38	457.52	525.00	N 52°22'1" E	443.18
RC39	391.80	475.00	N 53°42'8" E	380.79
RC41	43.67	27.00	N 16°15'47" W	39.06
RC42	122.38	175.00	N 82°37'59" W	119.91
RC43	42.41	27.00	N 32°19'57" E	38.18
RC44	264.52	325.00	S 10°38'56" W	257.28
RC45	41.87	27.00	N 10°27'22" W	37.80
RC46	42.41	27.00	N 80°7'20" E	38.18
RC47	229.37	275.00	S 11°13'38" W	222.78
RC48	42.41	27.00	S 57°40'3" E	38.18
RC49	157.35	225.00	N 82°37'59" W	154.16
RC50	42.41	27.00	N 72°24'5" E	38.18
RC51	209.25	475.00	N 14°46'52" E	207.56

PHASE V PROPERTY CURVE TABLE				
Curve	Length	Radius	Chord Dir	Chord Len
C1	105.10	175.00	N 85°27'44" W	103.53
C2	43.67	27.00	N 16°15'48" W	39.06
C3	114.53	475.00	N 36°58'46" E	114.25
C4	17.28	175.00	N 65°25'40" W	17.28
C5	136.99	475.00	N 52°8'55" E	136.51
C6	122.27	475.00	N 67°47'5" E	121.93
C7	18.02	475.00	N 76°14'45" E	18.02
C8	83.48	225.00	N 76°56'17" W	83.00
C9	42.41	27.00	N 72°24'5" E	38.18
C10	14.57	225.00	N 64°27'14" W	14.57
C11	42.41	27.00	N 32°19'57" E	38.18
C12	42.41	27.00	S 57°40'3" E	38.18
C13	59.30	225.00	S 84°52'58" W	59.13
C14	67.14	525.00	N 23°44'17" E	67.09
C15	27.59	525.00	N 28°54'25" E	27.59
C16	79.23	525.00	N 34°44'8" E	79.15
C17	79.23	525.00	N 43°22'55" E	79.15
C18	79.23	525.00	N 52°1'43" E	79.15
C19	79.23	525.00	N 60°40'30" E	79.15
C20	79.23	525.00	N 69°19'17" E	79.15
C21	33.79	525.00	N 75°29'19" E	33.79

PHASE V PROPERTY LINE TABLE		
Line	Length	Bearing
L1	135.00	S 12°40'3" E
L2	83.00	S 77°19'57" W
L3	135.00	N 12°40'3" W
L4	83.00	N 77°19'57" E
L5	135.00	S 12°40'3" E
L6	83.00	S 77°19'57" W
L7	83.00	N 77°19'57" E
L8	135.00	S 12°40'3" E
L9	83.00	S 77°19'57" W
L10	83.00	N 77°19'57" E
L11	135.00	S 12°40'3" E
L12	83.00	S 77°19'57" W
L13	83.00	N 77°19'57" E
L14	135.00	S 12°40'3" E
L15	83.00	S 77°19'57" W
L16	83.00	N 77°19'57" E
L17	135.00	S 12°40'3" E
L18	83.00	S 77°19'57" W
L19	83.00	N 77°19'57" E
L20	127.98	S 12°40'3" E
L21	73.34	S 71°50'24" W
L22	10.00	S 77°19'57" W
L23	83.00	N 77°19'57" E
L24	120.00	S 12°40'3" E
L25	83.38	S 71°50'24" W
L26	83.00	N 77°19'57" E
L27	119.88	S 21°19'25" W
L28	48.32	S 89°17'53" W
L29	15.40	N 77°19'57" E
L30	73.50	N 46°6'48" W
L31	57.95	S 62°35'55" E
L32	127.95	N 29°35'22" W
L33	73.34	N 71°50'24" E
L34	134.66	N 12°40'3" W
L35	83.38	N 71°50'24" E
L36	64.99	S 77°19'57" W
L37	135.00	N 12°40'3" W
L38	83.00	N 77°19'57" E
L39	120.72	S 23°41'26" W
L40	132.34	N 2°25'59" E
L41	130.18	S 71°54'27" E
L42	93.00	S 27°24'5" W
L43	58.44	N 62°35'55" W
L44	107.81	S 62°35'55" E
L45	80.00	S 27°24'5" W
L46	80.32	N 22°16'5" E
L47	115.00	S 62°35'55" E
L48	93.00	S 12°40'3" E
L49	63.00	S 77°19'57" W
L50	120.00	N 12°40'3" W
L51	90.00	N 77°19'57" E
L52	120.00	S 12°40'3" E
L53	66.00	S 77°19'57" W
L54	93.00	N 12°40'3" W
L55	93.00	N 77°19'57" E
L56	120.00	S 12°40'3" E
L57	83.00	S 77°19'57" W
L58	83.00	N 77°19'57" E
L59	120.00	S 12°40'3" E
L60	83.00	S 77°19'57" W
L61	83.00	N 77°19'57" E
L62	120.00	S 12°40'3" E
L63	83.00	S 77°19'57" W
L64	83.00	N 77°19'57" E
L65	24.02	S 77°19'57" W
L66	117.11	N 77°19'57" E
L67	120.00	S 12°40'3" E
L68	83.00	S 77°19'57" W
L69	120.00	N 12°40'3" W
L70	83.00	N 77°19'57" E
L71	83.00	S 77°19'57" W
L72	83.00	N 77°19'57" E
L73	93.29	S 27°24'5" W
L74	100.00	N 62°35'55" W
L75	12.93	N 27°24'5" E
L76	105.15	S 69°55'32" E
L77	83.00	S 27°24'5" W
L78	100.00	N 62°35'55" W
L79	83.00	N 27°24'5" E
L80	83.00	S 27°24'5" W
L81	100.00	N 62°35'55" W
L82	83.00	N 27°24'5" E
L83	90.00	S 27°24'5" W
L84	100.00	N 62°35'55" W
L85	90.00	N 27°24'5" E
L86	93.53	S 27°55'48" W
L87	100.00	N 59°35'15" W
L88	60.70	N 27°24'5" E
L89	94.23	S 34°44'8" W
L90	100.00	N 50°56'28" W
L91	94.23	S 43°22'55" W
L92	100.00	N 42°17'41" W
L93	94.23	S 52°1'43" W
L94	100.00	N 33°38'54" W
L95	94.23	S 60°40'30" W
L96	100.00	N 25°0'6" W
L97	95.75	S 62°33'9" W
L98	111.32	N 16°21'19" W
L99	94.96	S 77°19'57" W
L100	110.00	N 12°40'3" W
L101	54.04	N 77°19'57" E

REVISIONS	DATE
1. PPL Utility Pole location updates (PPL replaced existing poles)	2-17-2023
2. Addressing Review Comments	3-7-2023
3. Addressing Sanitary Sewer Comments	5-22-2023
4. Addressing Review Comments	11-16-2023
5. Added conditions notes to cover, setback notes to sheets 4 & 5 & shifted trees	1-4-2024
6. —	—
7. —	—
8. —	—
9. —	—

M:\Drawings\2022\202236\202236 Autumn Chase V\202236 SUB.dwg 1/4/2024 11:26:42 AM EST

MELLOTT ENGINEERING, INC.
Civil Engineering • Land Planning & Development • Water Resources
7500 Devonshire Heights Road • Hummelstown, PA 17036
mellotteng@comcast.net
717-566-6533

FINAL SUBDIVISION PLAN
FOR
AUTUMN CHASE PRD - PHASE V
Land Developer: Hertzler Road Associates, L.P.
UPPER ALLEN TOWNSHIP CUMBERLAND COUNTY PENNSYLVANIA

Project No. 202236
Date February 1, 2023

Sheet No.
5 of 21

GENERAL NOTES

1. Gravity public sanitary sewer service shall be provided to all proposed units. Sanitary Sewer Main installation associated with Phase V construction consists of a sewer extension from existing sewer stub out of existing manhole G13–06 located in the Pennington Community. Existing stub shall be removed–replaced back to MH G13–06 if in the field survey determines sewer stub was not installed per design from a horizontal or vertical standpoint (G13–06 rim and inverts shown are per field survey although sewer stub was not field surveyed). All sewer construction to be in accordance with Township standards. See Cover sheet and Construction Detail sheets for additional Sanitary Sewer Notes and details.
2. Public water service shall be provided to the project via water main extensions from the water main stubs installed with Phase II construction. The water system design shown on this plan is the approved final water design as provided by Veolia. All Phase V water mains shall be 8" DIP CL 52 and all water services shall be ¾" Type "K" copper. All water system improvements shall be installed in accordance with Veolia requirements.
3. Electric and telecommunication utilities shall be provided and installed as per applicable local utility provider.
4. See Post Construction Stormwater Management Plans for stormwater management BMP detailing.
5. See Erosion Control Plans for temporary BMPs to be implemented during construction.
6. A Community cluster mailbox is proposed as shown.
7. All streets proposed with this project shall be constructed to township standards and shall be offered for dedication to the township upon completion of improvements. All proposed streets are classified as minor streets and shall be 34' wide curbed cartways (slant curb) with an associated 50' right–of–way. Four foot wide concrete sidewalk shall be installed as shown; 5'x5' passing spaces shall be installed where shown.
8. All stormwater inlets located in the street shall be PennDOT Type "C" inlets with 8" hoods and all inlets in grass areas shall be Type "M" inlet; see curb to inlet transition detail for transition from slant curb to Type C inlet.
9. Curb ramps shall be installed where sidewalk meets with a street/curbline. Curb Ramps shall be installed in accordance with current Commonwealth of Pennsylvania Department of Transportation Standards for Roadway Construction Publication 72M requirements. The curb ramps shall be installed in accordance with RC–67M Alternative Type 4A Curb Ramp (Perpendicluiar) dated February 19, 2021. Painted Crosswalks shall be installed at each ramp/road crossing in accordance with Publication 111 TC–8600 requirements (6' crosswalk width centered on crossing, 6" white lines). Stop sign and stop bar shall be installed 4' away from the crosswalks where applicable.
10. The nature trail between S. Fall Harvest Drive and S, Autumn Chase Drive shall be constructed to ADA requirements. Trail longitudinal slope shall not exceed 5%, cross slope shall not exceed 2% and shall slope to the north and 5'x5' passing spaces shall be installed as shown or at locations not to exceed 200' spacing. Trail access points to the roads shall be ADA compliant via installation truncated dome strip and 5'x5' landing area (<2% all directions).

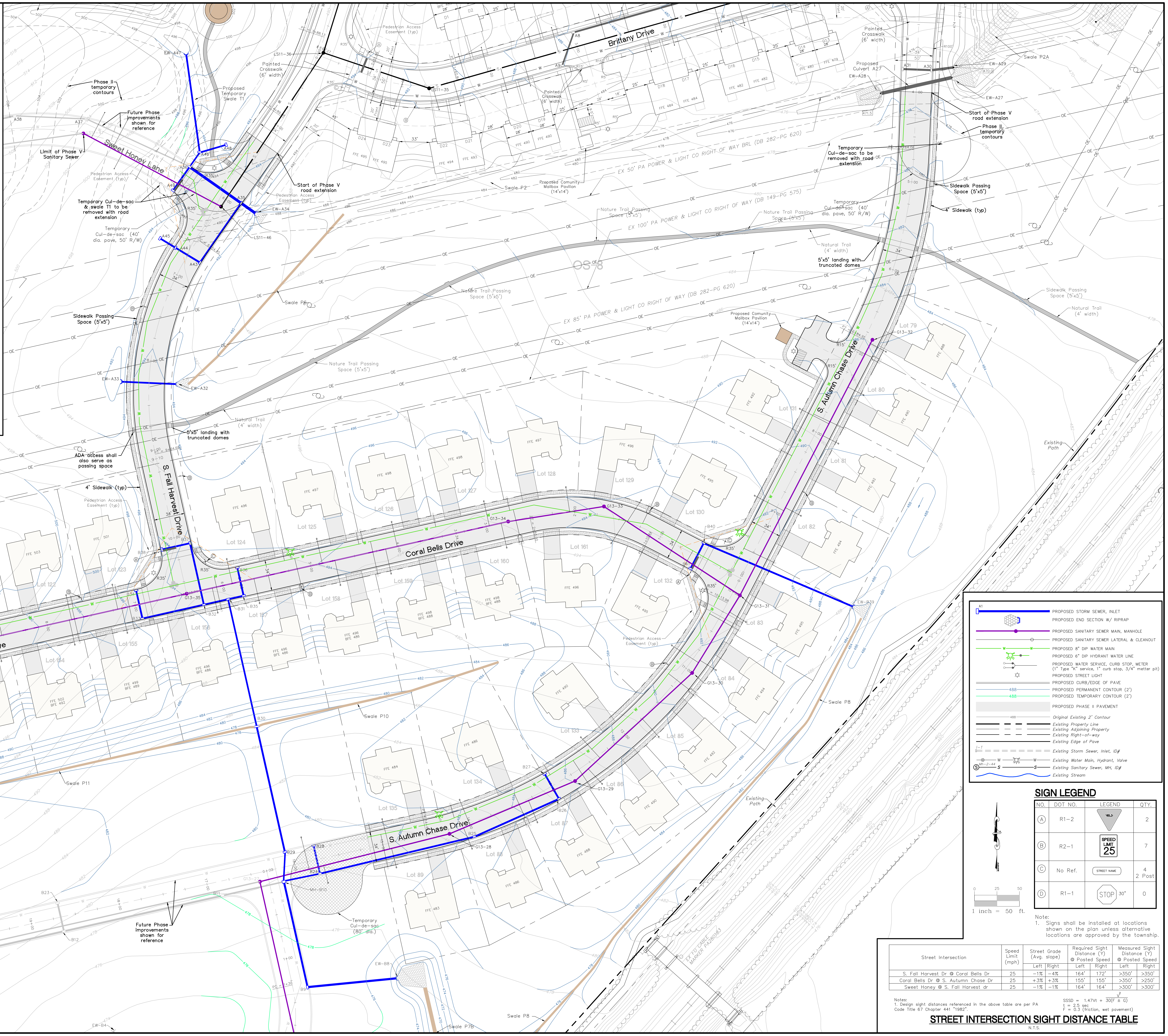

Brittany Drive
Sweet Honey Lane
S. Fall Harvest Drive
Coral Bells Drive
S. Autumn Chase Drive
Phase II temporary contours
Future Phase improvements shown for reference
Limit of Phase V Sanitary Sewer
Proposed Temporary Swale T1
Painted Crosswalk (6' width)
Pedestrian Access Easement (typ)
Start of Phase V road extension
Temporary Cul–de–sac & swale T1 to be removed with road extension
Temporary Cul–de–sac (40' dia. pave, 50' R/W)
Sidewalk Passing Space (5'x5')
5'x5' landing with truncated domes
ADA access shall also serve as passing space
4' Sidewalk (typ)
Natural Trail (4' width)
Nature Trail Passing Space (5'x5')
Proposed Community Mailbox Pavilion (14'x14')
EX 50' PA POWER & LIGHT CO RIGHT OF WAY BRL (DB 282–PG 620)
EX 100' PA POWER & LIGHT CO RIGHT OF WAY (DB 149–PG 575)
EX 85' PA POWER & LIGHT CO RIGHT OF WAY (DB 282–PG 620)
OS 8
Proposed Culvert A27
Temporary Cul–de–sac to be removed with road extension
Swale P2A
Swale P2
Swale P6
Swale P8
Swale P10
Swale P11
Swale P7B
Existing Path
Temporary Cul–de–sac (80' dia)
Phase V Temporary Contours
Lot 79
Lot 80
Lot 81
Lot 82
Lot 83
Lot 84
Lot 85
Lot 86
Lot 87
Lot 88
Lot 89
Lot 121
Lot 122
Lot 123
Lot 124
Lot 125
Lot 126
Lot 127
Lot 128
Lot 129
Lot 130
Lot 131
Lot 132
Lot 133
Lot 134
Lot 135
Lot 153
Lot 154
Lot 155
Lot 156
Lot 157
Lot 158
Lot 159
Lot 160
Lot 161
G13–29
G13–28
G13–30
G13–31
G13–32
G13–33
G13–34
G13–35
G13–36
MH–G10
EW–A47
EW–A34
EW–A33
EW–A32
EW–A29
EW–A28
EW–A27
EW–B22
EW–B8
EW–B4
LS11–36
LS11–35
LS11–46

PROPOSED STORM SEWER, INLET	A1
PROPOSED END SECTION W/ RIPRAP	
PROPOSED SANITARY SEWER MAIN, MANHOLE	
PROPOSED SANITARY SEWER LATERAL & CLEANOUT	
PROPOSED 8" DIP WATER MAIN	W
PROPOSED 6" DIP HYDRANT WATER LINE	HYD
PROPOSED WATER SERVICE, CURB STOP, METER (1" Type "K" service, 1" curb stop, 3/4" metter pit)	
PROPOSED STREET LIGHT	☼
PROPOSED CURB/EDGE OF PAVE	
PROPOSED PERMANENT CONTOUR (2')	488
PROPOSED TEMPORARY CONTOUR (2')	488
PROPOSED PHASE II PAVEMENT	▨
Original Existing 2' Contour	488
Existing Property Line	
Existing Adjoining Property	
Existing Right–of–way	
Existing Edge of Pave	
Existing Storm Sewer, Inlet, ID#	I–1
Existing Water Main, Hydrant, Valve	W, HYD
Existing Sanitary Sewer, MH, ID#	Mh–2–44, S
Existing Stream	

SIGN LEGEND

NO.	DOT NO.	LEGEND	QTY.
Ⓐ	R1–2	YIELD	2
Ⓑ	R2–1	SPEED LIMIT 25	7
Ⓒ	No Ref.	STREET NAME	4 2 Post
Ⓓ	R1–1	STOP 30"	0

MAGNETIC

0 25 50
1 inch = 50 ft.

Note:
1. Signs shall be installed at locations shown on the plan unless alternative locations are approved by the township.

Street Intersection	Speed Limit (mph)	Street Grade (Avg. slope)		Required Sight Distance (Y) @ Posted Speed		Measured Sight Distance (Y) @ Posted Speed	
		Left	Right	Left	Right	Left	Right
S. Fall Harvest Dr @ Coral Bells Dr	25	–1%	–4%	164'	172'	>350'	>350'
Coral Bells Dr @ S. Autumn Chase Dr	25	+3%	+3%	155'	155'	>350'	>250'
Sweet Honey @ S. Fall Harvest dr	25	–1%	–1%	164'	164'	>300'	>300'

Notes:
1. Design sight distances referenced in the above table are per PA Code Title 67 Chapter 441 "1982".

$$SSSD = 1.47Vt + \frac{V^2}{30(F \pm G)}$$
$t = 2.5$ sec
$F = 0.3$ (friction, wet pavement)

STREET INTERSECTION SIGHT DISTANCE TABLE

N.T.S.

	REVISIONS	DATE
1.	PPL Utility Pole location updates (PPL replaced existing poles)	2–17–2023
2.	Addressing Review Comments	3–7–2023
3.	Addressing Sanitary Sewer Comments	5–22–2023
4.	Addressing Review Comments	11–16–2023
5.	–	–
6.	–	–
7.	–	–
8.	–	–
9.	–	–

M:\Drawings\2022\202236 Autumn Chase V\202236 GRD.dwg 11/15/2023 6:14:40 PM EST

MELLOTT ENGINEERING, INC.
Civil Engineering • Land Planning & Development • Water Resources
7500 Devonshire Heights Road • Hummelstown, PA 17036
mellotteng@comcast.net
717–566–6533

GRADING AND UTILITY PLAN

FOR

AUTUMN CHASE PRD – PHASE V

Land Developer: Hertzler Road Associates, L.P.
UPPER ALLEN TOWNSHIP CUMBERLAND COUNTY PENNSYLVANIA

Project No. 202236
Date February 1, 2023

Sheet No.
6 of 21

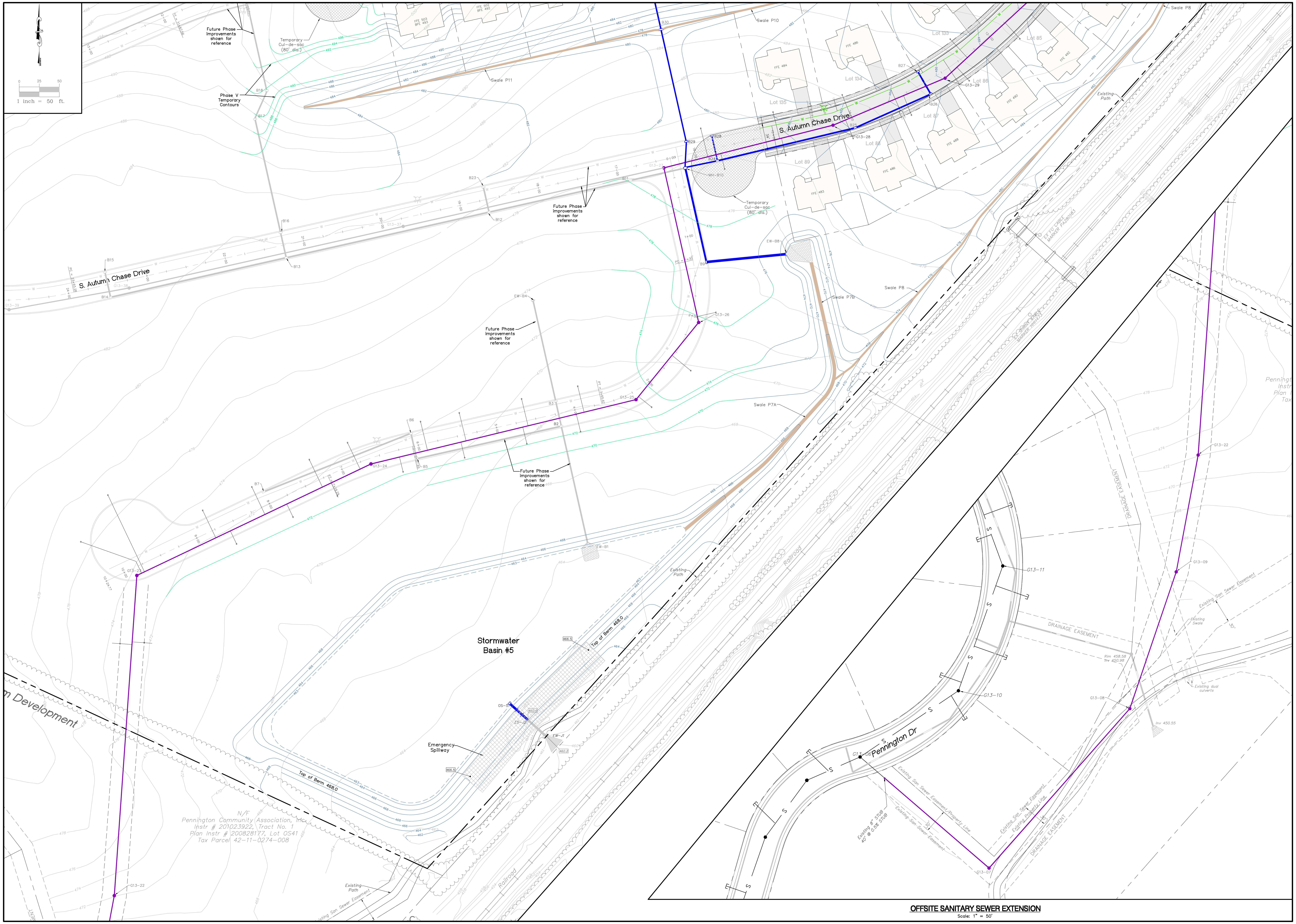
0 25 50
1 inch = 50 ft.
Future Phase Improvements shown for reference
Temporary Cul-de-sac (80' dia.)
Phase V Temporary Contours
S. Autumn Chase Drive
Swale P10
Swale P11
Swale P8
Swale P7B
Swale P7A
Lot 133
Lot 134
Lot 135
Lot 85
Lot 86
Lot 87
Lot 88
Lot 89
MH-910
G13-29
G13-28
G13-26
G13-25
G13-24
G13-23
G13-22
EW-B8
EW-B4
EW-B1
Existing Path
Stormwater Basin #5
Top of Berm 468.0
Emergency Spillway
Railroad
N/F
Pennington Community Association, Inc.
Instr # 201023922, Tract No. 1
Plan Instr # 200828177, Lot OS41
Tax Parcel 42-11-0274-008
Development
Pennington Dr
G13-11
G13-10
G13-09
G13-08
G13-07
DRAINAGE EASEMENT
Existing San Sewer Easement
Existing Swale
Existing dual culverts
Rim 458.58
Inv 450.98
Inv 450.55
Existing 8" STUB 40' @ 0.5% SLOPE

OFFSITE SANITARY SEWER EXTENSION
Scale: 1" = 50'

	REVISIONS	DATE
1.	PPL Utility Pole location updates (PPL replaced existing poles)	2–17–2023
2.	Addressing Review Comments	3–7–2023
3.	Addressing Sanitary Sewer Comments	5–22–2023
4.	Addressing Review Comments	11–16–2023
5.	–	–
6.	–	–
7.	–	–
8.	–	–
9.	–	–

M:\Drawings\2022\202236 Autumn Chase V\202236 GRD.dwg 11/15/2023 6:15:23 PM EST

MELLOTT ENGINEERING, INC.
Civil Engineering • Land Planning & Development • Water Resources
7500 Devonshire Heights Road • Hummelstown, PA 17036
mellotteng@comcast.net
717–566–6533

GRADING AND UTILITY PLAN
FOR
AUTUMN CHASE PRD – PHASE V
Land Developer: Hertzler Road Associates, L.P.
UPPER ALLEN TOWNSHIP CUMBERLAND COUNTY PENNSYLVANIA

Project No. 202236
Date February 1, 2023

Sheet No.
7 of 21

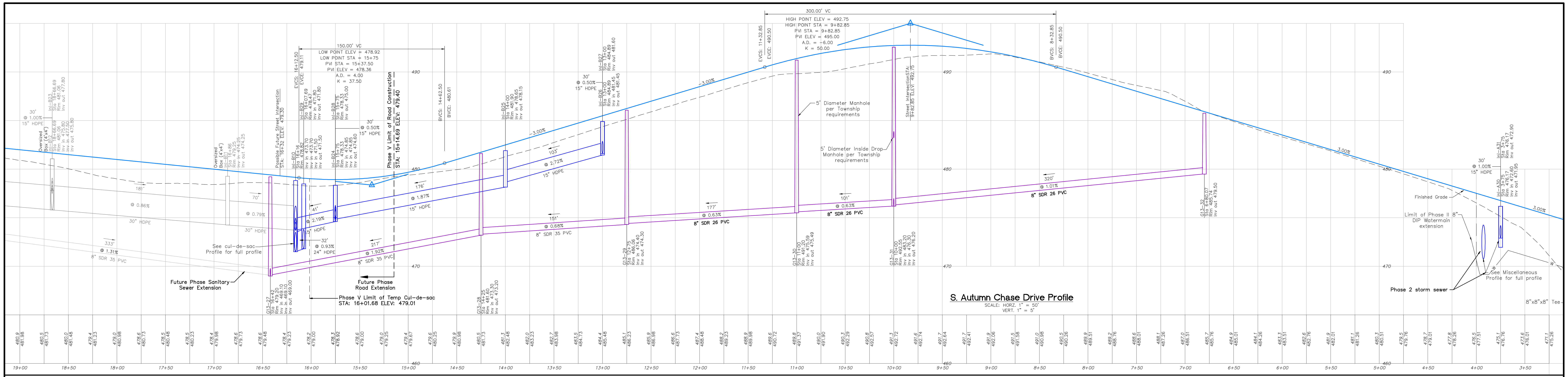
300.00' VC
HIGH POINT ELEV = 492.75
HIGH POINT STA = 9+82.85
PVI STA = 9+82.85
PVI ELEV = 495.00
A.D. = -6.00
K = 50.00
150.00' VC
LOW POINT ELEV = 478.92
LOW POINT STA = 15+75
PVI STA = 15+37.50
PVI ELEV = 478.36
A.D. = 4.00
K = 37.50
5' Diameter Manhole per Township requirements
5' Diameter Inside Drop Manhole per Township requirements
8" SDR 26 PVC
8" SDR 35 PVC
Future Phase Sanitary Sewer Extension
Future Phase Road Extension
Phase V Limit of Temp Cul-de-sac STA: 16+01.68 ELEV: 479.01
Phase V Limit of Road Construction STA: 15+14.69 ELEV: 479.40
See cul-de-sac Profile for full profile
Finished Grade
Limit of Phase II 8" DIP Watermain extension
See Miscellaneous Profile for full profile
Phase 2 storm sewer
8"x8"x8" Tee

S. Autumn Chase Drive Profile

SCALE: HORZ. 1" = 50'
VERT. 1" = 5'

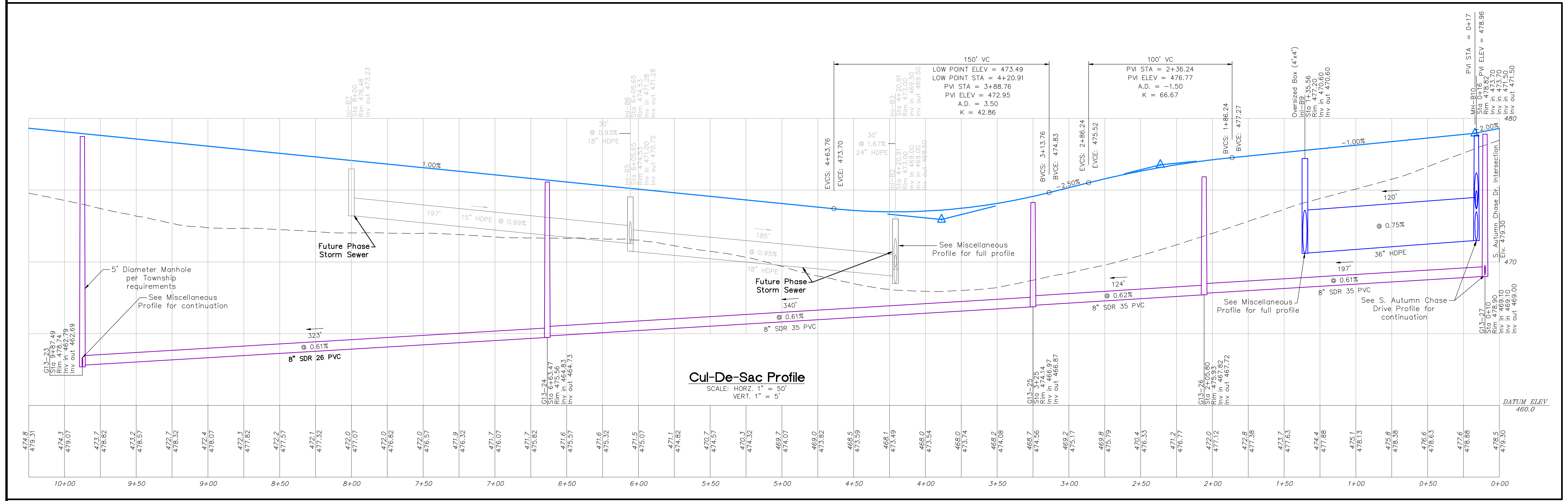
150' VC
LOW POINT ELEV = 473.49
LOW POINT STA = 4+20.91
PVI STA = 3+88.76
PVI ELEV = 472.95
A.D. = 3.50
K = 42.86
100' VC
PVI STA = 2+36.24
PVI ELEV = 476.77
A.D. = -1.50
K = 66.67
Future Phase Storm Sewer
5' Diameter Manhole per Township requirements
See Miscellaneous Profile for continuation
See Miscellaneous Profile for full profile
See S. Autumn Chase Drive Profile for continuation
8" SDR 26 PVC
8" SDR 35 PVC
DATUM ELEV 460.0

Cul-De-Sac Profile

SCALE: HORZ. 1" = 50'
VERT. 1" = 5'

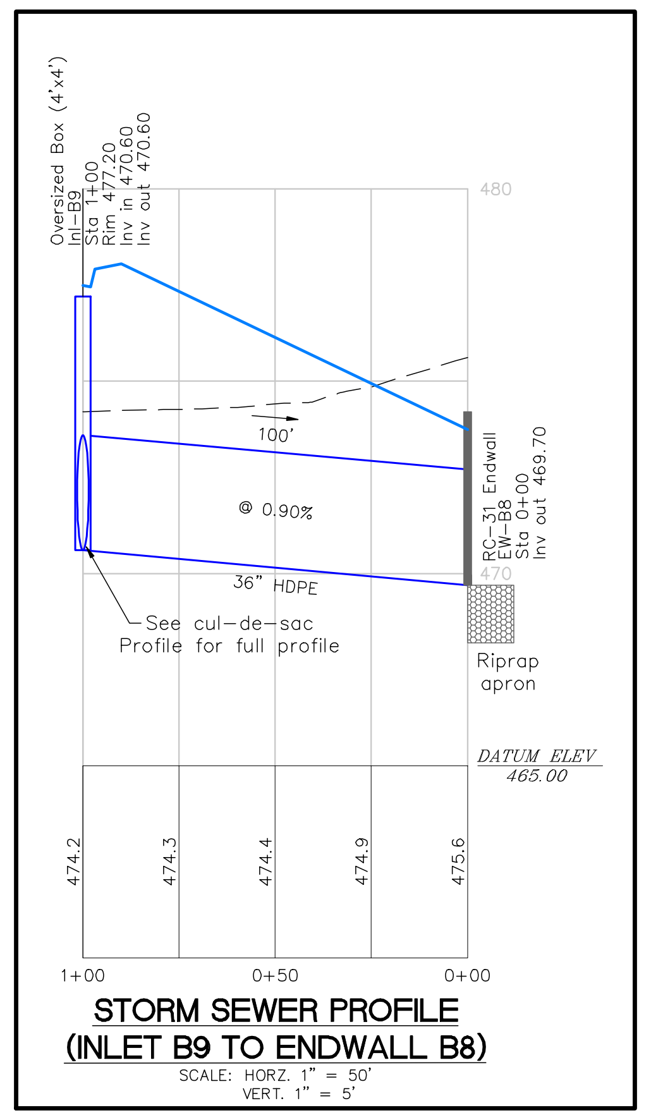
36" HDPE
See cul-de-sac Profile for full profile
Riprap apron
DATUM ELEV 465.00

STORM SEWER PROFILE
(INLET B9 TO ENDWALL B8)

SCALE: HORZ. 1" = 50'
VERT. 1" = 5'

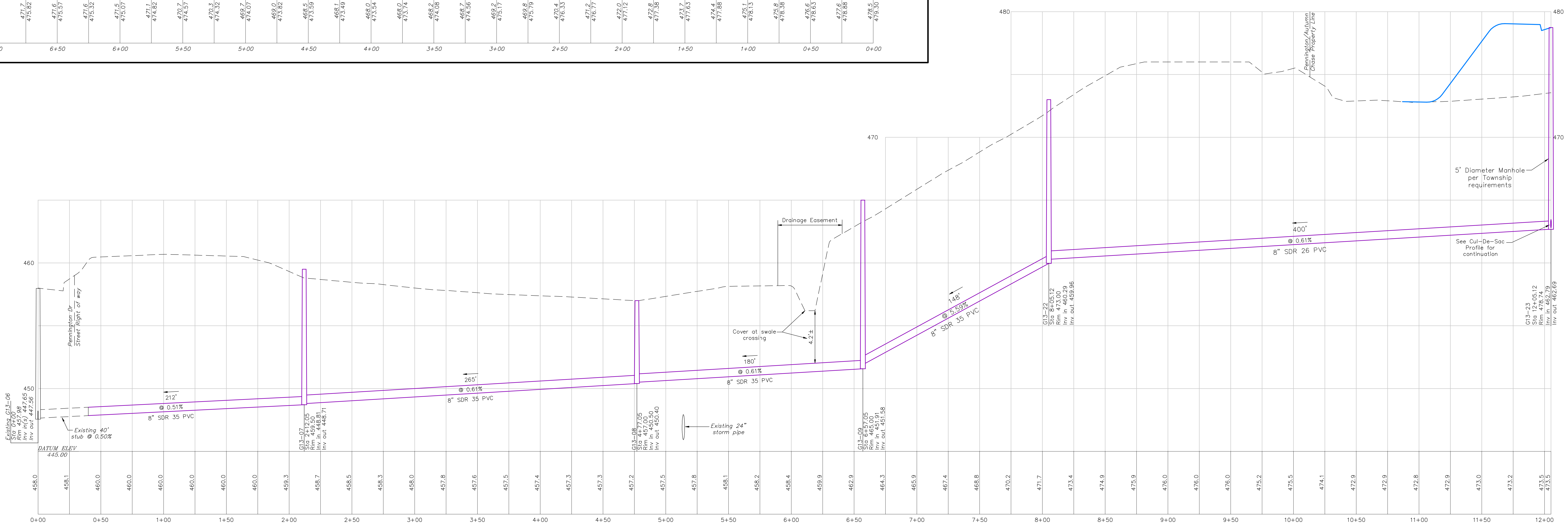
Drainage Easement
Cover at swale crossing
Existing 40" stub @ 0.50%
Existing 24" storm pipe
5' Diameter Manhole per Township requirements
See Cul-De-Sac Profile for continuation
8" SDR 35 PVC
8" SDR 26 PVC
DATUM ELEV 445.00

SANITARY SEWER PROFILE
(G13-23 TO EXISTING G13-06)

SCALE: HORZ. 1" = 50'
VERT. 1" = 5'

SANITARY SEWER PIPE LENGTHS SHOWN ON PROFILE REPRESENTS DISTANCE FROM CENTER OF MANHOLE TO CENTER OF MANHOLE; PIPE SLOPE SHOWN ON PROFILE IS CALCULATED BASED ON DISTANCE FROM INSIDE FACE OF MANHOLE TO INSIDE FACE OF MANHOLE

See Construction Detail sheet for Sanitary Sewer Index Map and Manhole location coordinates

STORMWATER INLETS

All inlets located in the street shall be PennDOT Type "C" inlets with 8" hoods and all inlets in grass areas shall be Type "M" inlets.

REVISIONS

	REVISIONS	DATE
1.	PPL Utility Pole location updates (PPL replaced existing poles)	2-17-2023
2.	Addressing Review Comments	3-7-2023
3.	Addressing Sanitary Sewer Comments	5-22-2023
4.	Addressing Review Comments	11-16-2023
5.	-	-
6.	-	-
7.	-	-
8.	-	-
9.	-	-

M:\Drawings\2022\202236 Autumn Chase V\202236 PR.dwg 11/16/2023 12:26:36 PM EST

MELLOTT ENGINEERING, INC.
Civil Engineering • Land Planning & Development • Water Resources
7500 Devonshire Heights Road • Hummelstown, PA 17036
mellotteng@comcast.net
717-566-6533

STREET AND UTILITY PROFLES
FOR
AUTUMN CHASE PRD - PHASE V
Land Developer: Hertzler Road Associates, L.P.
UPPER ALLEN TOWNSHIP CUMBERLAND COUNTY PENNSYLVANIA

Project No. 202236
Date February 1, 2023

Sheet No.
8 of 21

STORMWATER INLETS
All inlets located in the street shall be PennDOT Type "C" inlets with 8" hoods and all inlets in grass areas shall be Type "M" inlets.

SANITARY SEWER PIPE LENGTHS SHOWN ON PROFILE REPRESENTS DISTANCE FROM CENTER OF MANHOLE TO CENTER OF MANHOLE; PIPE SLOPE SHOWN ON PROFILE IS CALCULATED BASED ON DISTANCE FROM INSIDE FACE OF MANHOLE TO INSIDE FACE OF MANHOLE

See Construction Detail sheet for Sanitary Sewer Index Map and Manhole location coordinates

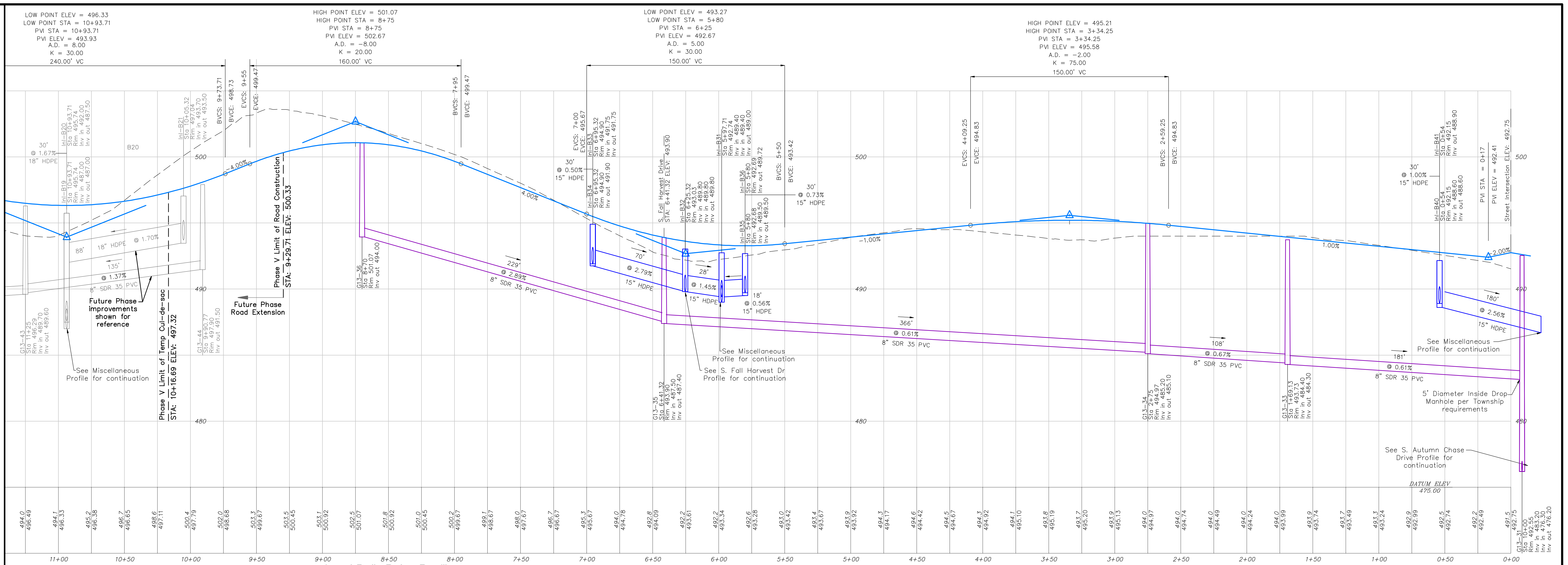
LOW POINT ELEV = 496.33
LOW POINT STA = 10+93.71
PVI STA = 10+93.71
PVI ELEV = 493.93
A.D. = 8.00
K = 30.00
240.00' VC
HIGH POINT ELEV = 501.07
HIGH POINT STA = 8+75
PVI STA = 8+75
PVI ELEV = 502.67
A.D. = -8.00
K = 20.00
160.00' VC
LOW POINT ELEV = 493.27
LOW POINT STA = 5+80
PVI STA = 6+25
PVI ELEV = 492.67
A.D. = 5.00
K = 30.00
150.00' VC
HIGH POINT ELEV = 495.21
HIGH POINT STA = 3+34.25
PVI STA = 3+34.25
PVI ELEV = 495.58
A.D. = -2.00
K = 75.00
150.00' VC
Future Phase Improvements shown for reference
Future Phase Road Extension
Phase V Limit of Temp Cul-de-sac STA: 10+16.69 ELEV: 497.32
Phase V Limit of Road Construction STA: 9+28.71 ELEV: 500.33
See Miscellaneous Profile for continuation
See S. Fall Harvest Dr Profile for continuation
5' Diameter Inside Drop Manhole per Township requirements
See S. Autumn Chase Drive Profile for continuation
8" SDR 35 PVC
15" HDPE
18" HDPE
DATUM ELEV 475.00

Coral Bells Drive Profile
SCALE: HORZ. 1" = 50'
VERT. 1" = 5'

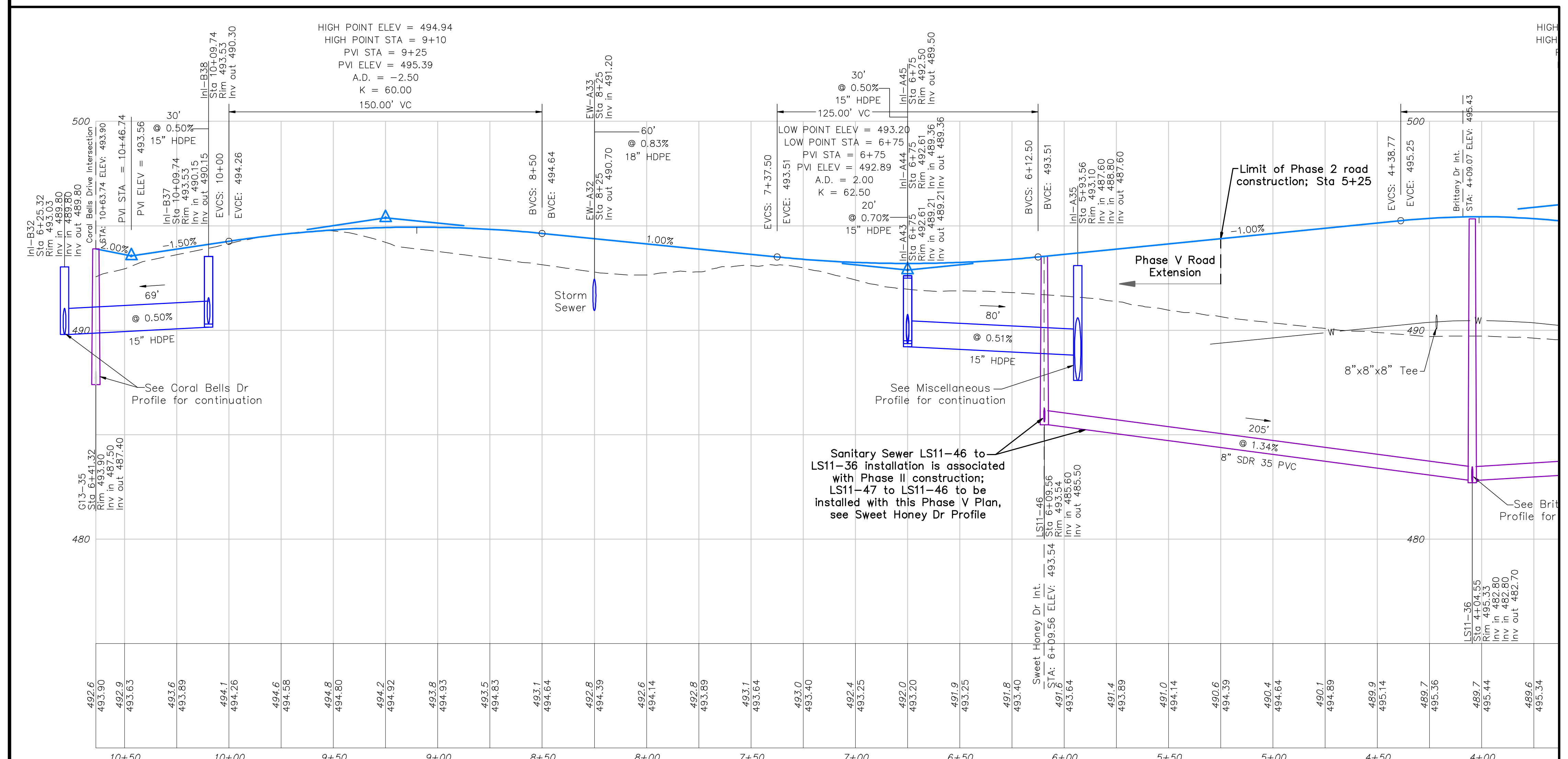
HIGH POINT ELEV = 494.94
HIGH POINT STA = 9+10
PVI STA = 9+25
PVI ELEV = 495.39
A.D. = -2.50
K = 60.00
150.00' VC
LOW POINT ELEV = 493.20
LOW POINT STA = 6+75
PVI STA = 6+75
PVI ELEV = 492.89
A.D. = 2.00
K = 62.50
125.00' VC
Limit of Phase 2 road construction; Sta 5+25
Phase V Road Extension
Storm Sewer
See Coral Bells Dr Profile for continuation
See Miscellaneous Profile for continuation
Sanitary Sewer LS11-36 to LS11-46 installation is associated with Phase II construction; LS11-47 to LS11-46 to be installed with this Phase V Plan, see Sweet Honey Dr Profile
8"x8"x8" Tee
8" SDR 35 PVC

S. Fall Harvest Drive Profile
SCALE: HORZ. 1" = 50'
VERT. 1" = 5'

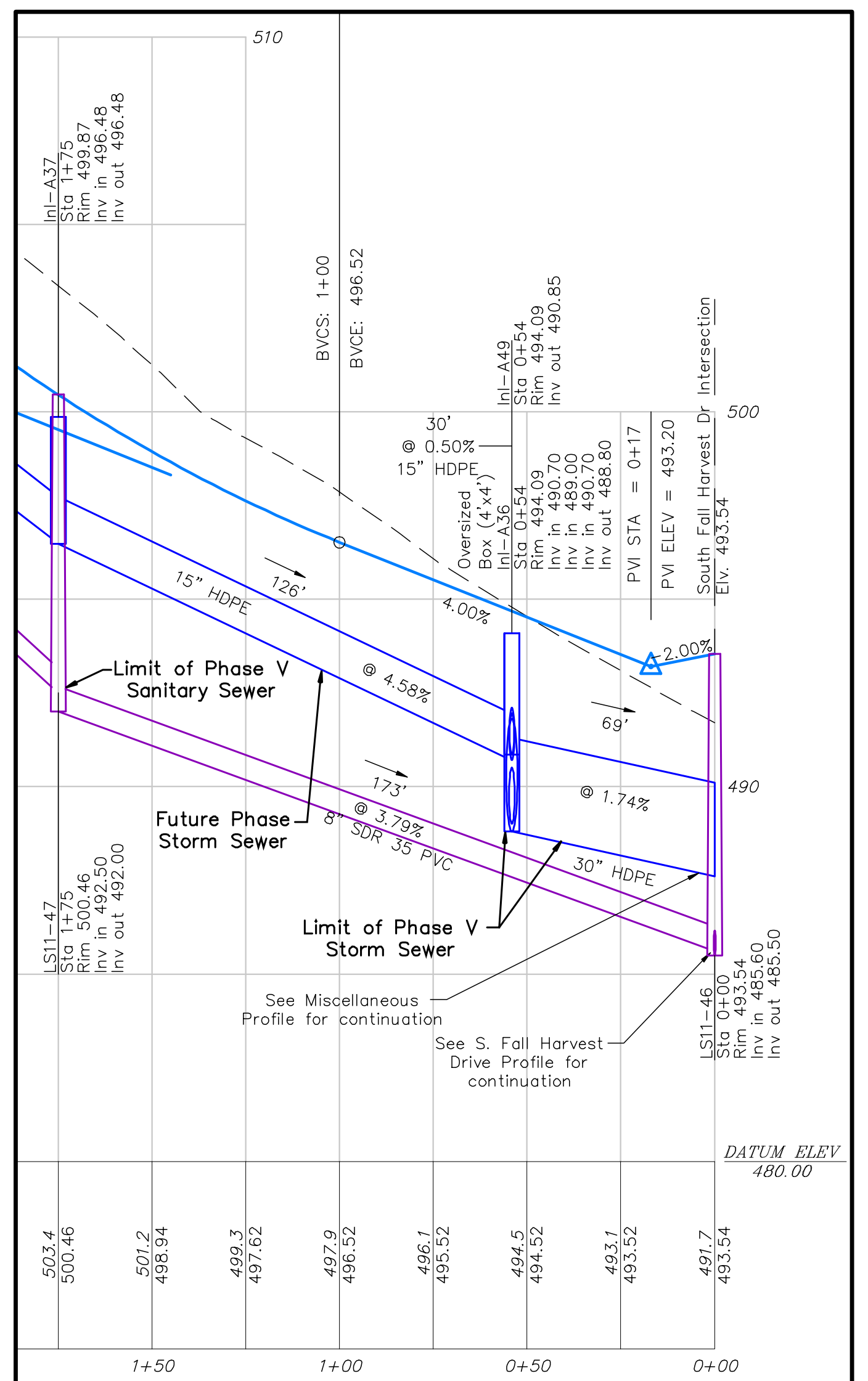
Limit of Phase V Sanitary Sewer
Future Phase Storm Sewer
Limit of Phase V Storm Sewer
See Miscellaneous Profile for continuation
See S. Fall Harvest Drive Profile for continuation
8" SDR 35 PVC
30" HDPE
DATUM ELEV 480.00

Sweet Honey Lane Profile
SCALE: HORZ. 1" = 50'
VERT. 1" = 5'

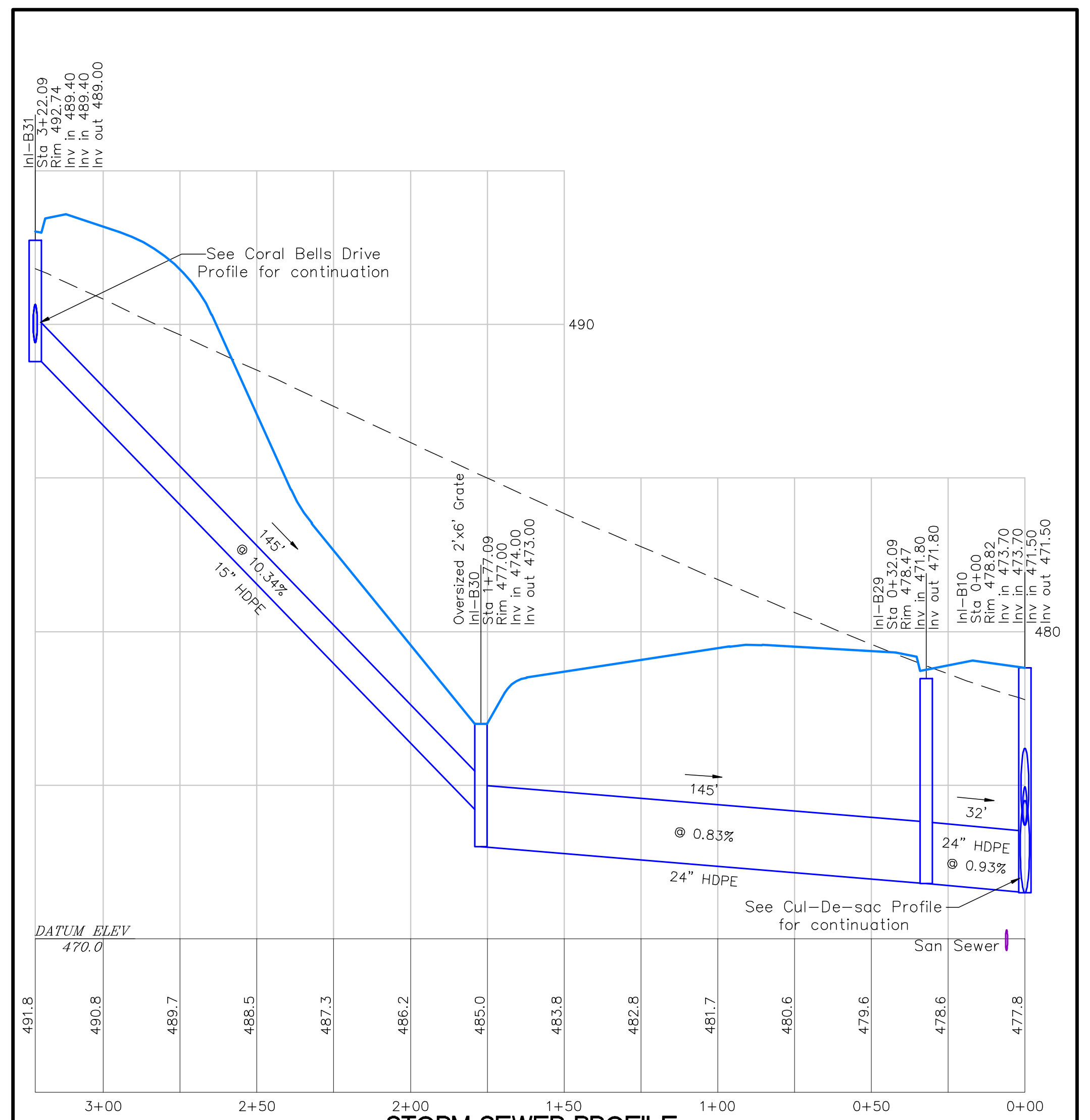
See Coral Bells Drive Profile for continuation
See Cul-De-sac Profile for continuation
San Sewer
24" HDPE
15" HDPE
DATUM ELEV 470.0

STORM SEWER PROFILE
(INLET B31 TO INLET B10)
SCALE: HORZ. 1" = 50'
VERT. 1" = 5'

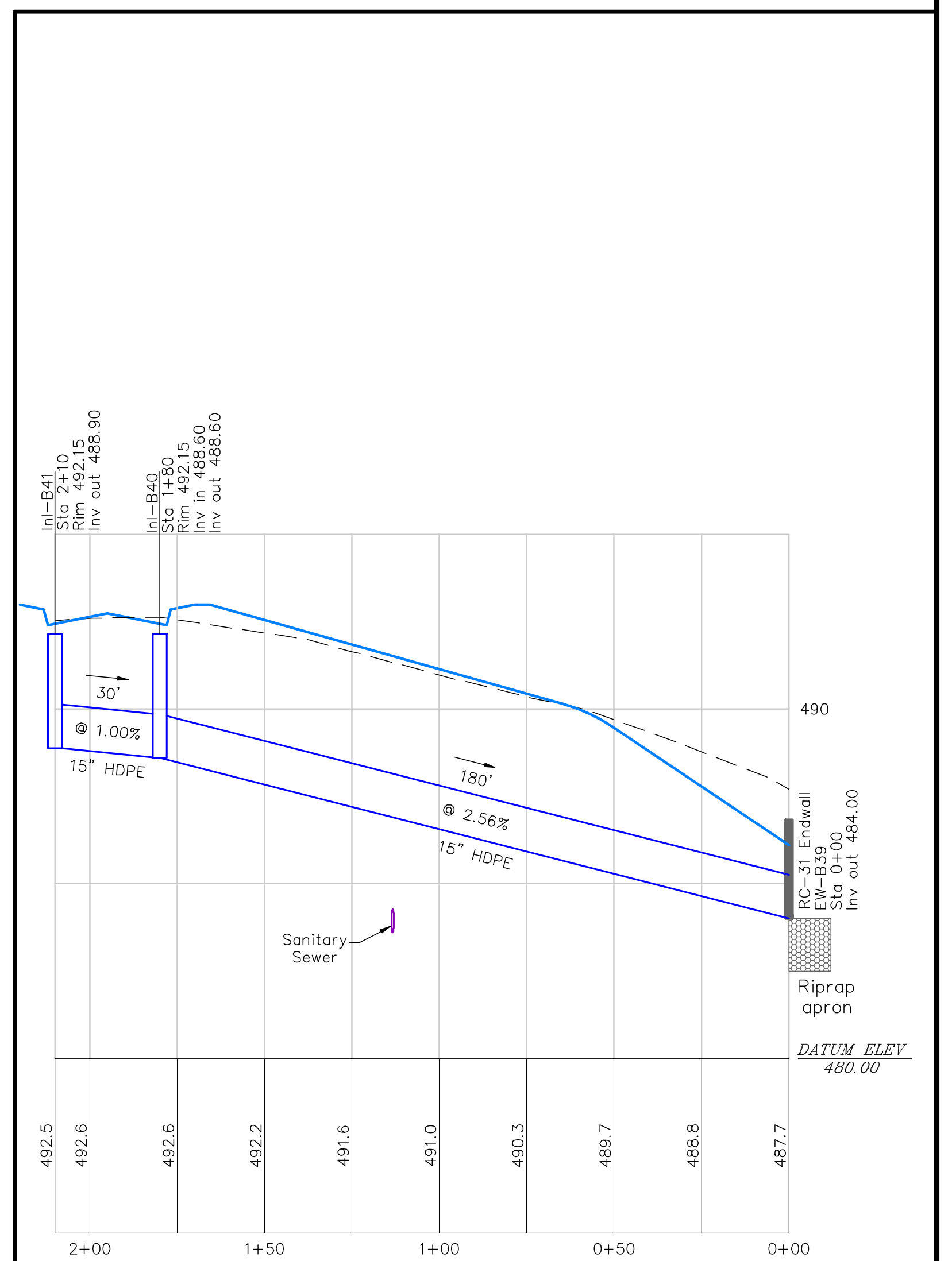
Sanitary Sewer
Riprap apron
15" HDPE
DATUM ELEV 480.00

STORM SEWER PROFILE
(INLET B41 TO ENDWALL B39)
SCALE: HORZ. 1" = 50'
VERT. 1" = 5'

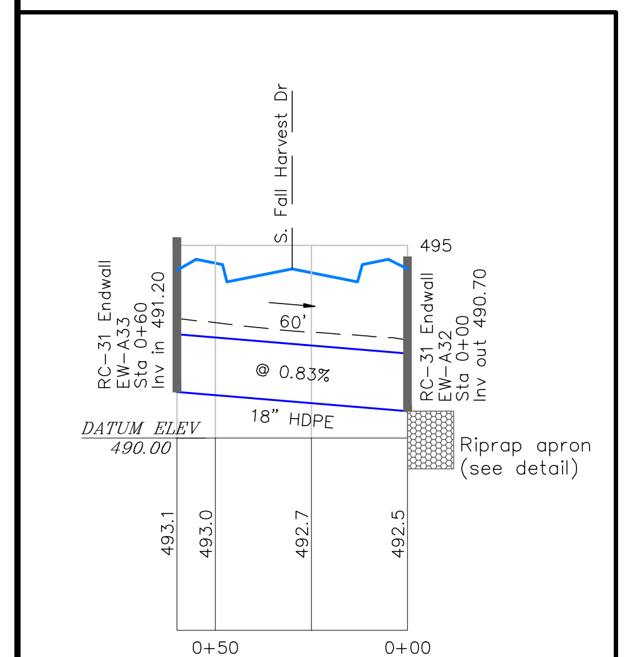
S. Fall Harvest Dr
Riprap apron (see detail)
18" HDPE
DATUM ELEV 490.00

STORM SEWER PROFILE
(ENDWALL A33 TO ENDWALL A32)
SCALE: HORZ. 1" = 50'
VERT. 1" = 5'

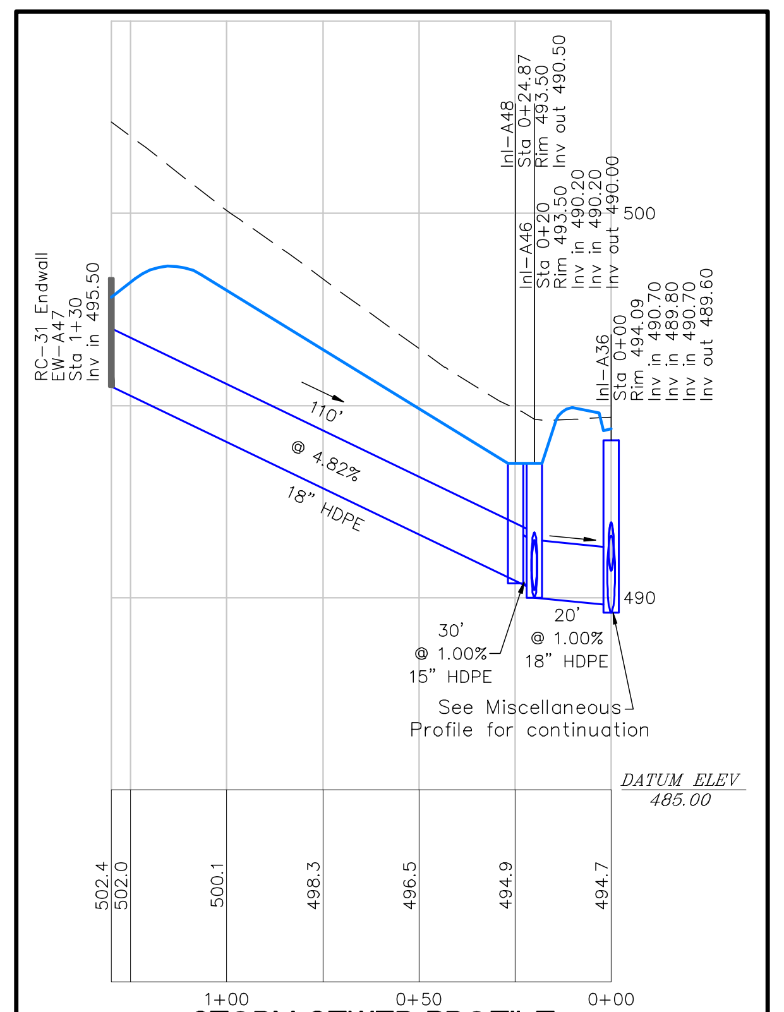
See Miscellaneous Profile for continuation
18" HDPE
15" HDPE
DATUM ELEV 485.00

STORM SEWER PROFILE
(ENDWALL A47 TO INLET A36)
SCALE: HORZ. 1" = 50'
VERT. 1" = 5'

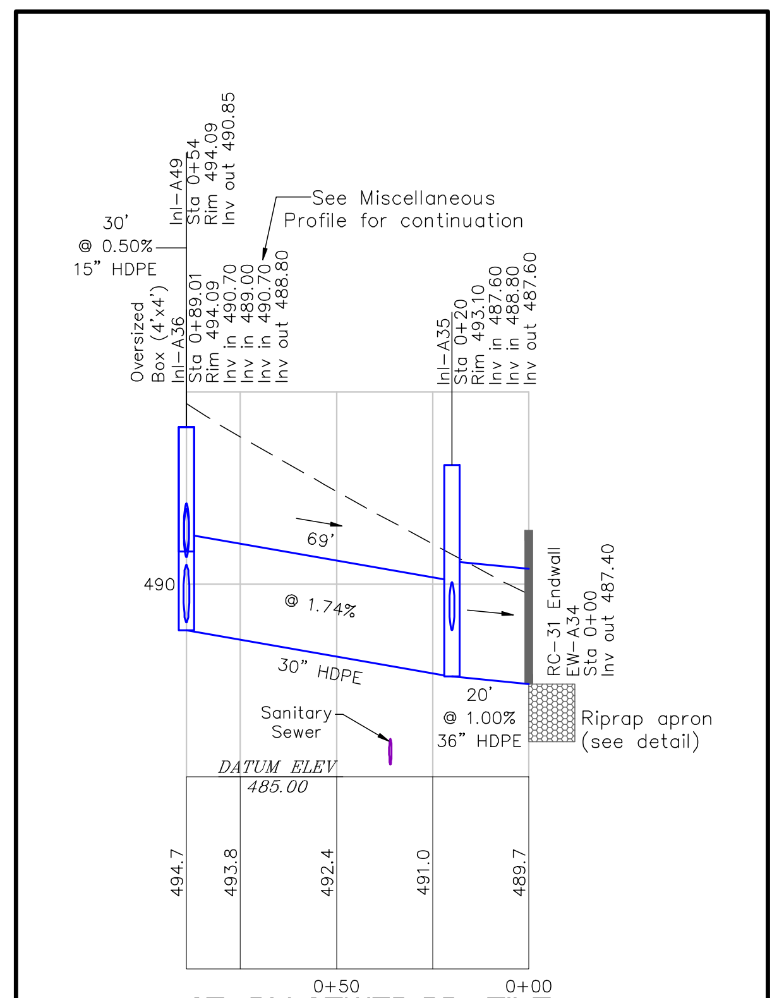
See Miscellaneous Profile for continuation
Sanitary Sewer
Riprap apron (see detail)
30" HDPE
36" HDPE
DATUM ELEV 485.00

STORM SEWER PROFILE
(INLET A36 TO ENDWALL A34)
SCALE: HORZ. 1" = 50'
VERT. 1" = 5'

	REVISIONS	DATE
1.	PPL Utility Pole location updates (PPL replaced existing poles)	2-17-2023
2.	Addressing Review Comments	3-7-2023
3.	Addressing Sanitary Sewer Comments	5-22-2023
4.	Addressing Review Comments	11-16-2023
5.	–	–
6.	–	–
7.	–	–
8.	–	–
9.	–	–

M:\Drawings\2022\202236 Autumn Chase V\202236 PR.dwg 11/16/2023 12:26:36 PM EST

MELLOTT ENGINEERING, INC.
Civil Engineering • Land Planning & Development • Water Resources
7500 Devonshire Heights Road • Hummelstown, PA 17036
mellotteng@comcast.net
717-566-6533

STREET AND UTILITY PROFLES
FOR
AUTUMN CHASE PRD - PHASE V
Land Developer: Hertzler Road Associates, L.P.
UPPER ALLEN TOWNSHIP CUMBERLAND COUNTY PENNSYLVANIA

Project No. 202236
Date February 1, 2023

Sheet No.
9 of 21

PCSM PLAN INTENT NOTE

The intent of the PCSM Plan sheets are to detail the Post Construction Stormwater Management facilities and Ownership and Maintenance Requirements.

STORMWATER BEST MANAGEMENT PRACTICES SUMMARY

The Post Construction Stormwater Management Plan provides for collection and treatment of project runoff. The main structural stormwater BMPs associated with the project consist of Bioretention–Detention Basins, vegetated swales and storm sewers. See below list of proposed Stormwater BMPs along with general descriptions.

1. Bioretention–Detention Basins – The Basins shall provide several key functions including but not limited to the following:
   a. Stormwater Runoff Rate control shall be provided by using Basin storage and associated outlet structures to attenuate the post development stormwater discharge rates to below pre–development rates for the 2–100 year storm events, including required rate reduction for southern watersheds.
   b. Stormwater Runoff volume control shall be provided through infiltration in Basins. All basins shall be constructed with flat bottoms with shallow sump and planted with retentive basin seed mixture which shall improve water quality, increase infiltration volume and promote evapotranspiration. Soil amendments shall also be used in the basin bottom preparation to enhance vegetation and associated root structure.
   c. The basin design provides for extended detention via use of small low flow orifices. The extended attenuation of the basin discharge provides for stream bank protection, promotes infiltration and provides for longer periods of filtering and plant uptake within the basins.
2. Vegetated Swales and sheet flow are proposed for collection and conveyance to the extent practical. Storm sewer system collection and conveyance is proposed where needed; riprap apron protection shall be provided at all pipe discharges.
3. Soil restoration & amendments: Soil restoration and amendments of the Stormwater Basin bottoms shall be provided. The basin bottom preparation consists of over excavating the basin bottom to 12" below finished grade, scarification/till the subgrade bottom (minimum 10" depth desired). Place 12" of the amended soils mixture over the prepared (tilled) basin bottom followed by stabilization with intended basin seed mixture and mulch. The scarification/tiling of the subsoils shall enhance permeability of the subsoils and to provide increased interface between the subsoils and the amended soils mixture and the amended soils mixture shall promote infiltration through enhance vegetation growth.
4. Street trees and landscaping are proposed with the project. The landscaping/trees shall provide the following benefits: nutrient uptake, evapotranspiration and thermal protection by shading of street pavement/sidewalk areas. Trees are also proposed around the stormwater basins. In addition, the retentive basin seeding shall also provide thermal protection of the basin runoff discharge through shading and additional uptake.
5. Rooftop Disconnect: All roof runoff shall be discharged overland prior to being conveyed to the basins; some roof area shall sheet flow directly to a basin although the majority of the runoff will be collected and conveyed to a respective basin via pipe and/or swale flow.
6. Drainage way(s) and natural features preservation. The stream paralleling Hertzler Road shall be preserved in a drainage easement. The existing wetland pocket on the south side of Hertzler Road shall also be preserved in an easement; no wetland impacts proposed.

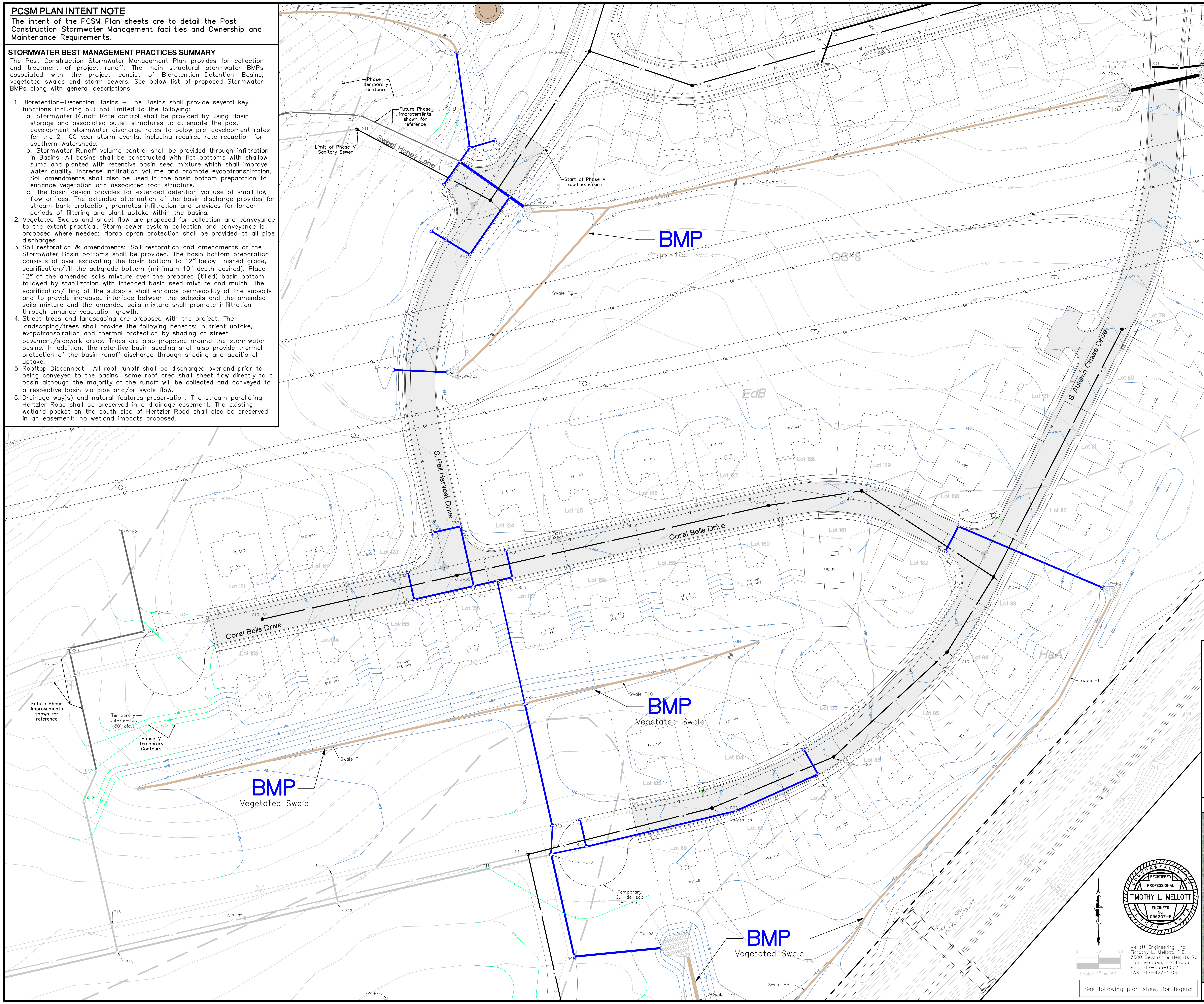
BMP
Vegetated Swale
BMP
Vegetated Swale
BMP
Vegetated Swale
BMP
Vegetated Swale
Sweet Honey Lane
S. Fall Harvest Drive
Coral Bells Drive
Coral Bells Drive
S. Autumn Chase Drive
Phase II temporary contours
Future Phase improvements shown for reference
Limit of Phase V Sanitary Sewer
Start of Phase V road extension
Start of Phase V road extension
Phase II temporary contours
Proposed Culvert A27
Swale P2A
Swale P2
Swale P6
Swale P8
Swale P10
Swale P11
Swale P7B
Future Phase improvements shown for reference
Temporary Cul-de-sac (80' dia.)
Phase V Temporary Contours
Temporary Cul-de-sac (80' dia.)
OS-8
EdB
HaA
Lot 79
Lot 80
Lot 81
Lot 82
Lot 83
Lot 84
Lot 85
Lot 86
Lot 87
Lot 88
Lot 89
Lot 121
Lot 122
Lot 123
Lot 124
Lot 125
Lot 126
Lot 127
Lot 128
Lot 129
Lot 130
Lot 131
Lot 132
Lot 133
Lot 134
Lot 135
Lot 153
Lot 154
Lot 155
Lot 156
Lot 157
Lot 158
Lot 159
Lot 160
Lot 161
0 30 60
Scale: 1" = 60'
MAGNETIC

REGISTERED PROFESSIONAL
TIMOTHY L. MELLOTT
ENGINEER No. 056207–E

Mellott Engineering, Inc.
Timothy L. Mellott, P.E.
7500 Devonshire Heights Rd
Hummelstown, PA 17036
PH: 717–566–6533
FAX: 717–427–2700

See following plan sheet for legend

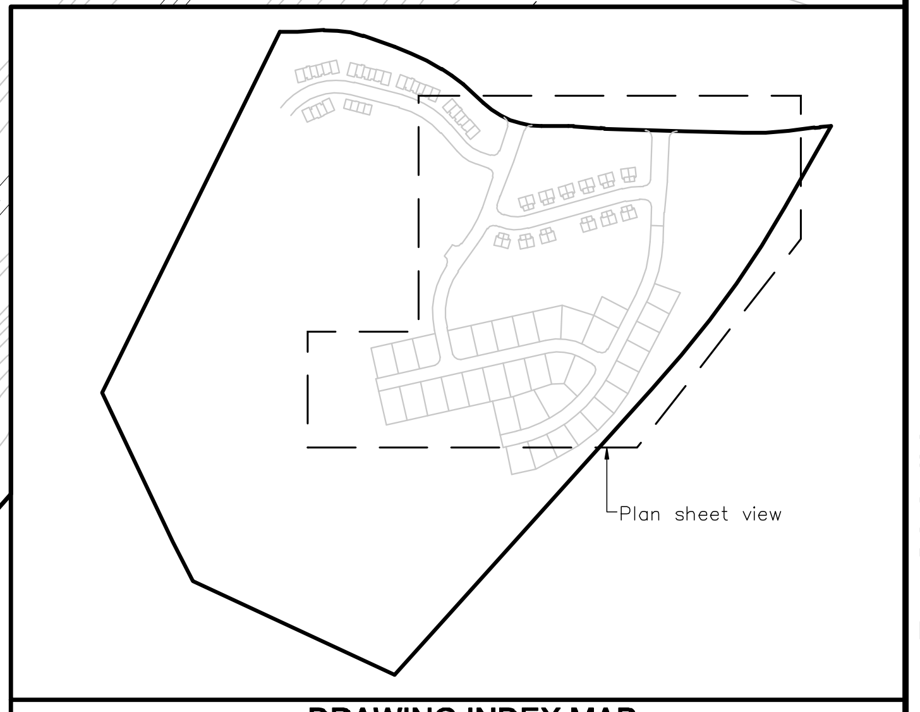
Plan sheet view

DRAWING INDEX MAP
Scale: 1" = 750'

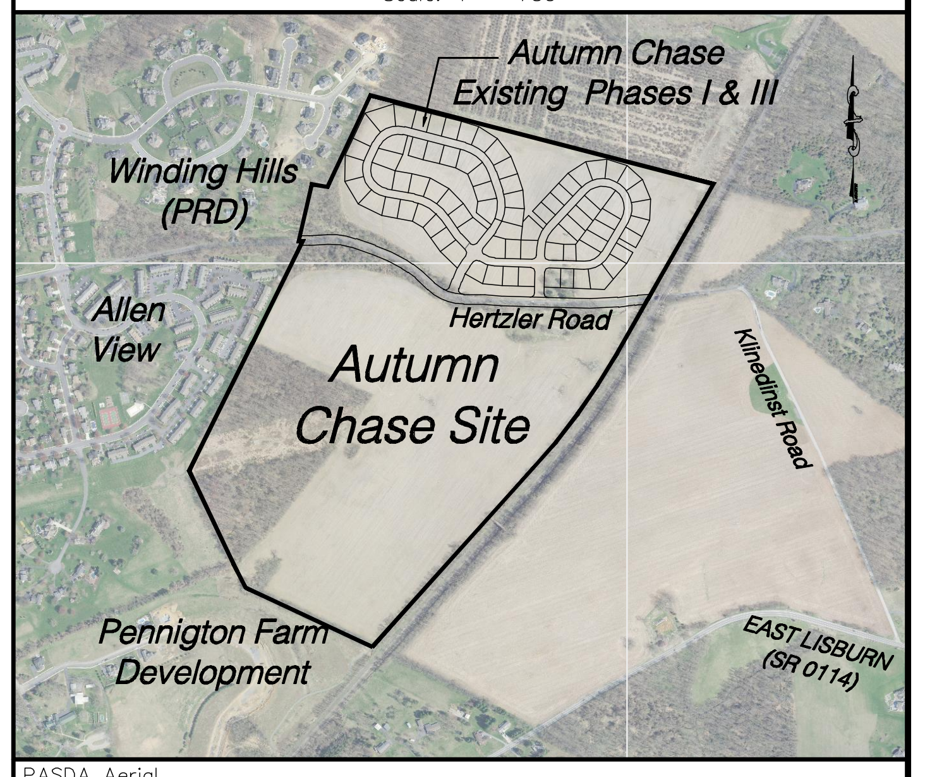
Autumn Chase Existing Phases I & III
Winding Hills (PRD)
Allen View
Hertzler Road
Autumn Chase Site
Pennigton Farm Development
EAST LISBURN (SR 0114)
Kilmarnock Road

PASDA Aerial

LOCATION/NPDES BOUNDARY MAP
Scale: 1" = 1,200'

	REVISIONS	DATE
1.	PPL Utility Pole location updates (PPL replaced existing poles)	2–17–2023
2.	Addressing Review Comments	3–7–2023
3.	Addressing Sanitary Sewer Comments	5–22–2023
4.	Addressing Review Comments	11–16–2023
5.	–	–
6.	–	–
7.	–	–
8.	–	–
9.	–	–

M:\Drawings\2022\202236 Autumn Chase V\202236 PCSM.dwg 11/29/2023 5:42:58 PM EST

MELLOTT ENGINEERING, INC.
Civil Engineering • Land Planning & Development • Water Resources
7500 Devonshire Heights Road • Hummelstown, PA 17036
mellotteng@comcast.net
717–566–6533

POST CONSTRUCTION STORMWATER MANAGEMENT PLAN
FOR
AUTUMN CHASE PRD – PHASE V
Land Developer: Hertzler Road Associates, L.P.
UPPER ALLEN TOWNSHIP CUMBERLAND COUNTY PENNSYLVANIA

PCSM #1

Project No. 202236
Date February 1, 2023

Sheet No.
PCSM #1
10 of 21

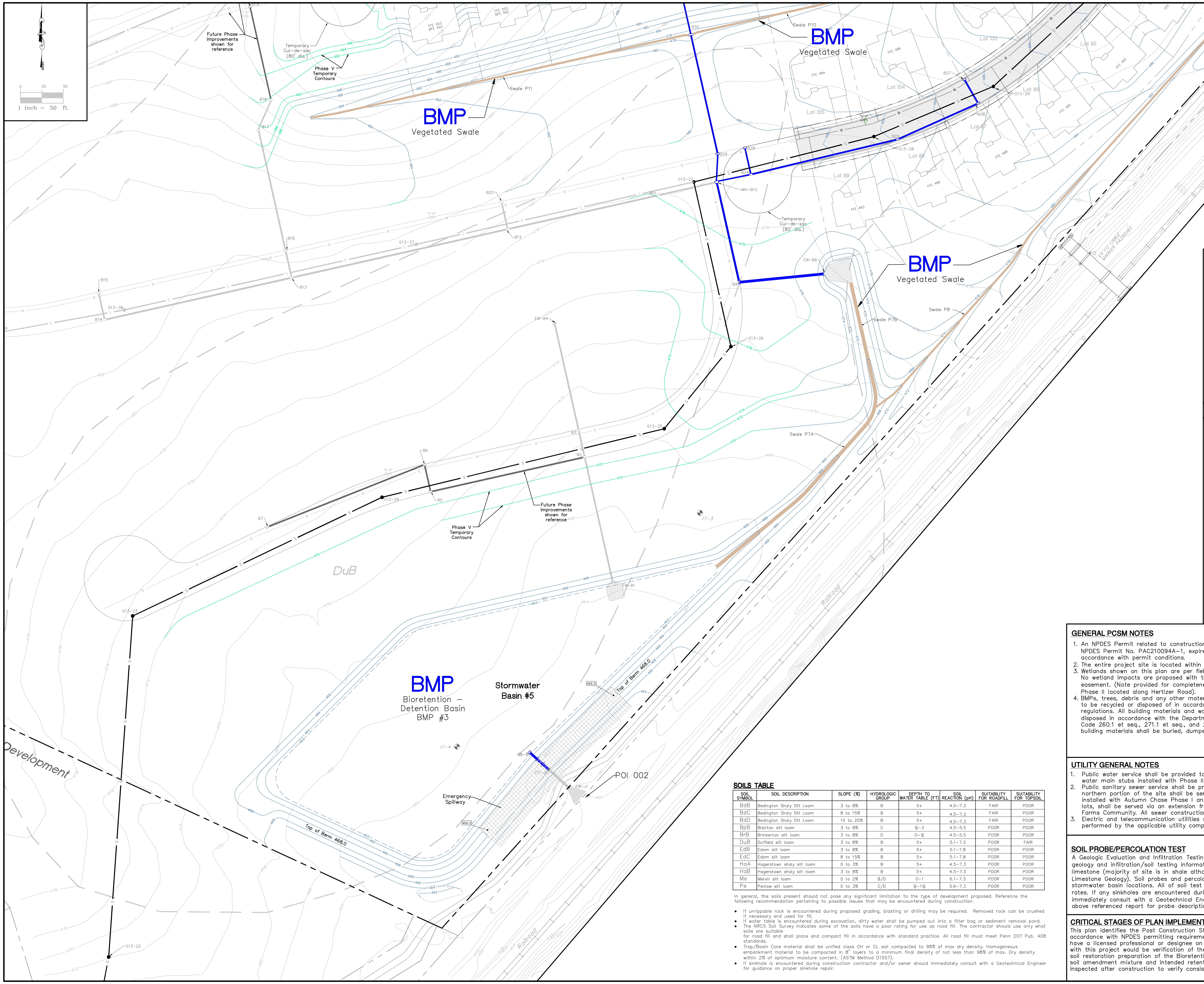

SOILS TABLE

SOIL SYMBOL	SOIL DESCRIPTION	SLOPE (%)	HYDROLOGIC GROUP	DEPTH TO WATER TABLE (FT)	SOIL REACTION (pH)	SUITABILITY FOR ROADFILL	SUITABILITY FOR TOPSOIL
BdB	Bedington Shaly Silt Loam	3 to 8%	B	5+	4.5–7.3	FAIR	POOR
BdC	Bedington Shaly Silt Loam	8 to 15%	B	5+	4.5–7.3	FAIR	POOR
BdD	Bedington Shaly Silt Loam	15 to 25%	B	5+	4.5–7.3	FAIR	POOR
BpB	Blairton silt loam	3 to 8%	C	½–3	4.5–5.5	POOR	POOR
BrB	Brinkerton silt loam	3 to 8%	D	0–½	4.5–5.5	POOR	POOR
DuB	Duffield silt loam	3 to 8%	B	5+	5.1–7.3	POOR	FAIR
EdB	Edom silt loam	3 to 8%	B	5+	5.1–7.8	POOR	POOR
EdC	Edom silt loam	8 to 15%	B	5+	5.1–7.8	POOR	POOR
HaA	Hagerstown shaly silt loam	0 to 3%	B	5+	4.5–7.3	POOR	POOR
HaB	Hagerstown shaly silt loam	3 to 8%	B	5+	4.5–7.3	POOR	POOR
Me	Melvin silt loam	0 to 2%	B/D	0–1	6.1–7.3	POOR	POOR
Pe	Penlaw silt loam	0 to 3%	C/D	½–1½	5.6–7.3	POOR	POOR

In general, the soils present should not pose any significant limitation to the type of development proposed. Reference the following recommendation pertaining to possible issues that may be encountered during construction.

- If unrippable rock is encountered during proposed grading, blasting or drilling may be required. Removed rock can be crushed if necessary and used for fill.
- If water table is encountered during excavation, dirty water shall be pumped out into a filter bag or sediment removal pond.
- The NRCS Soil Survey indicates some of the soils have a poor rating for use as road fill. The contractor should use only what soils are suitable
  for road fill and shall place and compact fill in accordance with standard practice. All road fill must meet Penn DOT Pub. 408 standards.
- Trap/Basin Core material shall be unified class CH or CL soil compacted to 98% of max dry density. Homogeneous embankment material to be compacted in 8" layers to a minimum final density of not less than 98% of max. Dry density within 2% of optimum moisture content. (ASTM Method D1557).
- If sinkhole is encountered during construction contractor and/or owner should immediately consult with a Geotechnical Engineer for guidance on proper sinkhole repair.

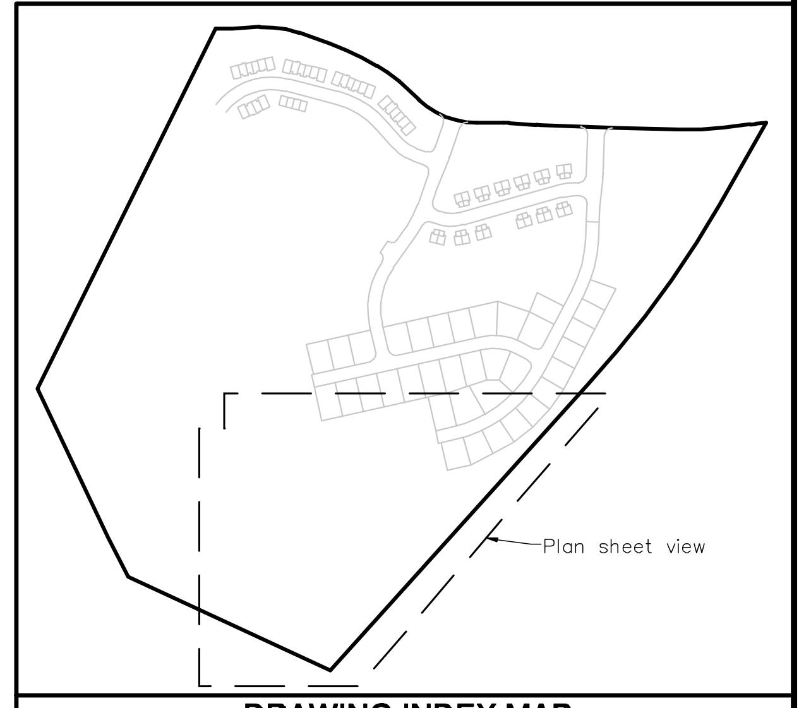

DRAWING INDEX MAP

Scale: 1" = 750'

LEGEND

A1
PROPOSED STORM SEWER, INLET
PROPOSED SANITARY SEWER MAIN, MANHOLE
PROPOSED WATER MAIN (Concept)
PROPOSED CURB/EDGE OF PAVE
488 PROPOSED PERMANENT CONTOUR (2')
487 PROPOSED PERMANENT CONTOUR (1')
488 PROPOSED TEMPORARY CONTOUR (2')
PROPOSED PAVEMENT
488 *Existing 2' Contour*
Existing Property Line
Existing Adjoining Property
Existing Right-of-way
Existing Edge of Pave
I-1 *Existing Storm Sewer, Inlet, ID#*
W HYD W *Existing Water Main, Hydrant, Valve*
Mh-2-44 S S *Existing Sanitary Sewer, MH, ID#*
EdC *Existing Soil Boundary Line & Soil Description*
I# *Existing Infiltration Test (See SWM Report)*
Existing Treeline to remain
Existing Wetland
Existing Stream
Existing 100 Year Floodplain (Effective)

GENERAL PCSM NOTES

1. An NPDES Permit related to construction activities is associated with this project (existing NPDES Permit No. PAC210094A–1, expires December 7, 2024.) All work to be performed in accordance with permit conditions.
2. The entire project site is located within the Yellow Breeches Creek watershed (CWF).
3. Wetlands shown on this plan are per field delineation performed by Vortex Environmental, Inc.. No wetland impacts are proposed with this project and the wetlands shall be perserved in an easement. (Note provided for completeness although only wetlands are located in previous Phase II located along Hertlzer Road).
4. BMPs, trees, debris and any other materials not proposed to permanently remain on–site are to be recycled or disposed of in accordance with Department of Environmental Protection regulations. All building materials and wastes must be removed from the site and recycled or disposed in accordance with the Department's Solid Waste Management Regulations at 25 Pa. Code 260.1 et seq., 271.1 et seq., and 287.1 et seq. No building material, wastes or unused building materials shall be buried, dumped, or discharged at the site.

UTILITY GENERAL NOTES

1. Public water service shall be provided to the project via a water main extensions from the water main stubs installed with Phase II construction.
2. Public sanitary sewer service shall be provided to the project via gravity sewer extensions. The northern portion of the site shall be served via extension from existing manhole LS11–31 installed with Autumn Chase Phase I and southern portion of the site, including all of Phase V lots, shall be served via an extension from the sewer system located within the Pennington Farms Community. All sewer construction to be in accordance with Township standards.
3. Electric and telecommunication utilities shall serve the project. These utility designs shall be performed by the applicable utility company after conditional plan approval.

SOIL PROBE/PERCOLATION TEST

A Geologic Evaluation and Infiltration Testing Report was prepared by CMX which detailed soils, geology and infiltration/soil testing information. The underlying geology is shale with some limestone (majority of site is in shale although eastern portion of site along Hertzler Road is in Limestone Geology). Soil probes and percolation tests where conducted at each of the stormwater basin locations. All of soil test locations yielded suitable probes and infiltration rates. If any sinkholes are encountered during construction contractor and/or owner should immediately consult with a Geotechnical Engineer for guidance on proper sinkhole(s) repair. See above referenced report for probe descriptions and infiltration test rates.

CRITICAL STAGES OF PLAN IMPLEMENTATION

This plan identifies the Post Construction Stormwater Management BMPs for the project. In accordance with NPDES permitting requirements, critical stages of implementation of the plan shall have a licensed professional or designee on site. The critical stages of construction associated with this project would be verification of the outfall pipe installations with antiseep collars, proper soil restoration preparation of the Bioretention–Detention Basin bottoms followed by placement of soil amendment mixture and intended retentive basin seed mixture. All other BMPs can be inspected after construction to verify consistency with the intended design.

PCSM #2

POST CONSTRUCTION STORMWATER MANAGEMENT PLAN

FOR

AUTUMN CHASE PRD – PHASE V

Land Developer: Hertzler Road Associates, L.P.

UPPER ALLEN TOWNSHIP
CUMBERLAND COUNTY
PENNSYLVANIA

Project No. 202236
Date February 1, 2023
Sheet No. PCSM #2
11 of 21

MELLOTT ENGINEERING, INC.
Civil Engineering • Land Planning & Development • Water Resources
7500 Devonshire Heights Road • Hummelstown, PA 17036
mellotteng@comcast.net
717–566–6533

	REVISIONS	DATE
1.	PPL Utility Pole location updates (PPL replaced existing poles)	2–17–2023
2.	Addressing Review Comments	3–7–2023
3.	Addressing Sanitary Sewer Comments	5–22–2023
4.	Addressing Review Comments	11–16–2023
5.	–	–
6.	–	–
7.	–	–
8.	–	–
9.	–	–

M:\Drawings\2022\202236 Autumn Chase V\202236 PCSM.dwg 11/29/2023 5:40:34 PM EST

OPERATION AND MAINTENANCE NOTES

BMPs Inspection and Maintenance Requirements

The property owner on which the stormwater facilities are located shall be responsible for operation and maintenance of the on-lot SWM BMP facilities consistent with the Operation and Maintenance Plan for the project and in accordance with the "Operation & Maintenance Agreement Stormwater Management Best Management Practices". The Home Owners Association shall be responsible for the Operation and Maintenance of all stormwater facilities located outside of a public right of way excluding individual on lot infiltration beds and/or rain gardens which shall be owned and maintained by the respective property owner (only roof area not draining to a Basin requires an infiltration bed and/or rain garden, see plan for applicable lots).

Description of Operation and Maintenance Requirements

The following inspection and maintenance activities shall be performed on a regular basis; bi-monthly during mowing months, monthly on non mowing months and within 48 hours after a major storm event: (> 1 inch rainfall depth). In addition to the following see the Township Inspection Reporting requirements following the below list:

Bioretention-Detention Basins

1. Basin outlet structures shall be routinely inspected to verify the orifices and/or grate top are not clogged. Remove any accumulated debris from the outlet structure.
2. Emergency Spillways shall be routinely inspected for erosion. Bare soil shall be stabilized with topsoil, seeding and permanent liner as detailed.
3. All trash and debris should be regularly removed from basins and upslope areas.
4. Reseed bare areas; install appropriate erosion control measures when native soil is exposed.
5. Mow or trim vegetation to maintain vegetation lengths as required by Township. Stormwater Management Basin bottoms are planted with a wetland-type basin seed mix to aid in filtering and treatment of stormwater runoff. The basin bottoms may be trimmed for aesthetics and to remove debris and inspect for damage; however, the bottom areas shall not be mowed.
6. Basins shall be inspected at time of mowing for invasive weeds, large shrubs and trees (no mowing of basin bottom, see above note). Remove such undesirable invasive vegetation as necessary.
7. Basin Embankment and surrounding areas shall be free of burrowing animals in order to protect the structural integrity of the stormwater facility.
8. All piping inlet and outlet structures shall be free of holes, cracks, seepage, leakage or other defects.
9. Inspect of Basin dewatering times: All basins are to fully dewater within 72 hours of the completion of a rain event. If standing water remains in a basin after maximum allowable 72 hours dewatering time the Home Owners Associated shall contact the site engineer for an inspection. The following remediation measures should be implemented if it is believed the upper topsoil/amendment mixture (12" layer) is the limiting factor: chisel plow the top surface layer to maximum depth practical, smooth out surface followed by stabilization with intended retentive basin seed mixture. The following remediation measures should be implemented if it is believed the subsoils (soil horizon below topsoil/amendments layer) is the limiting factor: remove and stockpile top soil/amendment layer (12" layer), chisel plow the subsoils to maximum depth practical, place the topsoil/amendment mixture over the remediated subsoils, smooth out surface followed by stabilization with intended retentive basin seed mixture.

Vegetated Swales

1. Swales shall be inspected for erosion. Any erosion shall be immediately stabilized with topsoil, seeding and liner accordingly.
2. All trash and debris should be regularly removed from swales and upslope areas.
3. Mow and trim vegetation to ensure safety, aesthetics, proper swale operation, or to suppress weeds and invasive vegetation; mow only when swale is dry to avoid rutting.

Storm Sewer System & Riprap Aprons (Located outside of public right of ways)

1. All inlets and the surrounding areas shall be free of all obstructions, spent liquids such as oils, fuels, petroleum products, antifreeze, sediment, grease, trash and debris.
2. All riprap aprons shall be inspected and reestablished if needed.

PROPERTY OWNERSHIP O&M & TOWNSHIP RIGHT OF ENTRY NOTE

The property owner on which the stormwater facilities are located shall be responsible for operation and maintenance of the on-lot facilities consistent with the Operation and Maintenance Plan associated with the project. In the event that the responsible person or entity fails to do so, the owner hereby grants to Upper Allen Township the right but not the duty to enter upon the premises to repair or restore said facilities, to charge and assess the costs thereof to the owner, and to enforce said charges and assessments by lien upon the property. In addition, the deed for the applicable lots shall contain a covenant binding the grantee and all successors' title and interest designating the responsibility for operation and maintenance of the on-lot facilities.

The Owner shall agree that no action will be taken to block or impede the passage of water through said stormwater management facilities and will place no structure, building, or fence, nor plant any trees or shrubs which would impede the use of said facilities for its intended purposes, without prior approval from the Township.

Current Property Owner/Responsible Party

The current owner (Hertzler Road Associates, L.P.), or any succeeding owner or any succeeding owner(s), has a legal duty to maintain the stormwater and drainage facilities as detailed above and in accordance with the associated Stormwater O&M Agreement.

PERMANENT SEEDING

A. All disturbed soil not to be covered with impervious surfaces, riprap or landscaping mulch shall be permanently seeded to provide protection against the impact of precipitation, running water and wind.
B. Mulching shall be used to protect seeding and help in preventing runoff. Clean straw mulch shall be required in all disturbed areas and applied at a rate of 3 tons/acre (equivalent to 0.75" to 1" deep). Clean straw mulch should not be finely chopped nor broken during application.

Maintenance procedure:

1) Maintain a minimum 70% soil surface coverage with grass and/or mulch.
2) If a washout, slope failure or similar disturbance occurs, correct drainage problem if necessary, then reapply soil to the proper grade, reapply soil amendments, seed and mulch.

Permanent seeding schedule is as follows:

For gentle lawn areas

Species: 40% Kentucky Bluegrass
40% Pennlawn Creeping Red Fescue
20% Norlea Perennial Ryegrass

For Swales, steep slopes and wet areas: 100% Tall Fescue, varieties such as K-31, Altra,
or other recently released dwarf variety
% Pure live seed: 98%
Application rate: 6 lbs./1000 sq. ft.
Fertilizer type: general purpose granular, 10-20-20
Fertilizer application rate: 1000 lbs per acre
Liming rate: Four (4) tons per acre of agricultural grade lime
Strawbale mulch rate: three (3) tons per acre
Seeding dates: Between 4/1 and 10/15

BMP SEQUENCE OF CONSTRUCTION

The below sequence notes are relative to Stormwater Management BMPs; see Erosion Control Plans for complete sequence of construction notes. The vegetated swales shall be installed during construction although the four stormwater basins shall not be converted to their respective permanent conditions until upslope areas are completed stabilized; see below sequence.

1. Stormwater Basin 4B shall be installed as a clean water basin with initial construction although the amended soils in the basin bottom shall not be installed until upslope areas are fully stabilized (basin 4B temporary bottom shall be at the proposed finished grade elevation although do not over excavate the basin bottom until future installation of amended soils mixture; see end of sequence notes). Basin 4B bottom shall be stabilized in accordance with permanent seeding specifications until future installation of amended soils (retentive basin seeding proposed with future amended soils installation).
2. The erosion control measures may not be removed until the entire upslope drainage area has a permanent stabilization. This occurs with a minimum uniform 70% perennial vegetative cover or other permanent non-vegetative cover with a density sufficient to resist accelerated surface erosion and subsurface characteristics sufficient to resist sliding and other movements. All paved areas must be paved or have a compacted stone base in place. Upon completion of all earth disturbance activities and permanent stabilization of all disturbed areas, the owner and/or operators shall contact the County Conservation District for an inspection prior to the removal of the erosion control BMP's.
3. After the Conservation District representative has inspected the site and agrees the site is stabilized the BMP's can be removed as follows:
   a. Critical Stage of Construction (Basin 4B amended soils): After all upslope contributing areas are permanently stabilized and after receiving authorization from a CCCD representative Stormwater Basin 4B amended soils installation can be performed (prior to conversion of Sed Basin 4A). Install 18" compost sock around outlet structure to provide for filtering during final stabilization process. Soil restoration and amendments of the Stormwater Basin bottom shall be provided at time of conversion. The basin bottom preparation consists of over excavating the basin bottom to 12" below finished grade, scarification/till the subgrade bottom (10" depth desired), smooth out bottom with light weight track equipment and place 12" of the amended soils mixture across basin bottom followed by stabilization with intended basin seed mixture and mulch.
   b. Critical Stage of Construction (Sed Basins 4A, 5 & 6 conversions): After all upslope contributing areas are permanently stabilized and after receiving authorization from a CCCD representative Sediment Basins 4A, 5 and 6 can be converted to the permanent stormwater basin configurations. Install 18" compost sock around outlet structures to provide for filtering during final stabilization process. Remove temporary riser attachment and convert outlet structure to permanent condition. Soil restoration and amendments of the Stormwater Basin bottom shall be provided at time of conversion. The basin bottom preparation consists of over excavating the basin bottoms to 12" below finished grade, scarification/till the subgrade bottom (10" depth desired), smooth out bottom with light weight track equipment and place 12" of the amended soils mixture across basin bottom followed by stabilization with intended basin seed mixture and mulch.
   c. BMPs, trees, debris and any other materials not proposed to permanently remain on-site are to be recycled or disposed of in accordance with Department of Environmental Protection regulations. All building materials and wastes must be removed from the site and recycled or disposed in accordance with the Department's Solid Waste Management Regulations at 25 Pa. Code 260.1 et seq., 271.1 et seq., and 287.1 et seq. No building material or wastes or unused building materials shall be buried, dumped, or discharged at the site.

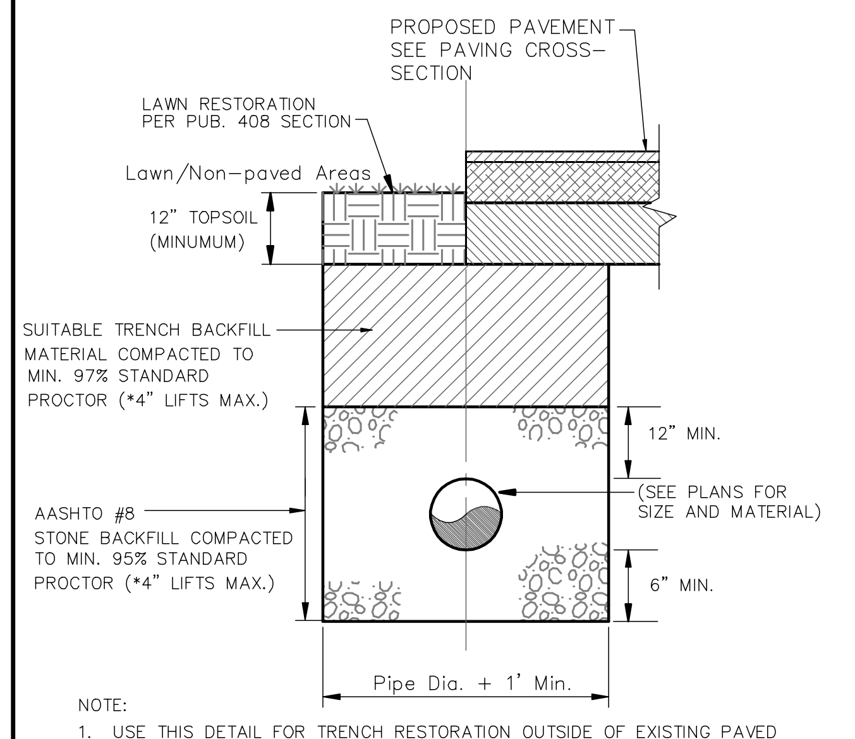
PROPOSED PAVEMENT- SEE PAVING CROSS-SECTION
LAWN RESTORATION PER PUB. 408 SECTION
Lawn/Non-paved Areas
12" TOPSOIL (MINIMUM)
SUITABLE TRENCH BACKFILL MATERIAL COMPACTED TO MIN. 97% STANDARD PROCTOR (*4" LIFTS MAX.)
AASHTO #8 STONE BACKFILL COMPACTED TO MIN. 95% STANDARD PROCTOR (*4" LIFTS MAX.)
12" MIN.
(SEE PLANS FOR SIZE AND MATERIAL)
6" MIN.
Pipe Dia. + 1' Min.

NOTE:

1. USE THIS DETAIL FOR TRENCH RESTORATION OUTSIDE OF EXISTING PAVED AREAS.
2. ALL MATERIALS AND INSTALLATION PROCEDURES SHALL CONFORM TO PENN DOT PUBLICATION 408, MOST RECENT AMENDMENT.

*3. BACKFILL MAY COMPACTED IN 8" LIFTS IF VIBRATORY EQUIPMENT IS USED.

STORM SEWER DETAIL FOR TRENCHES IN GRASSED AREAS OR NEW PAVEMENT

NTS

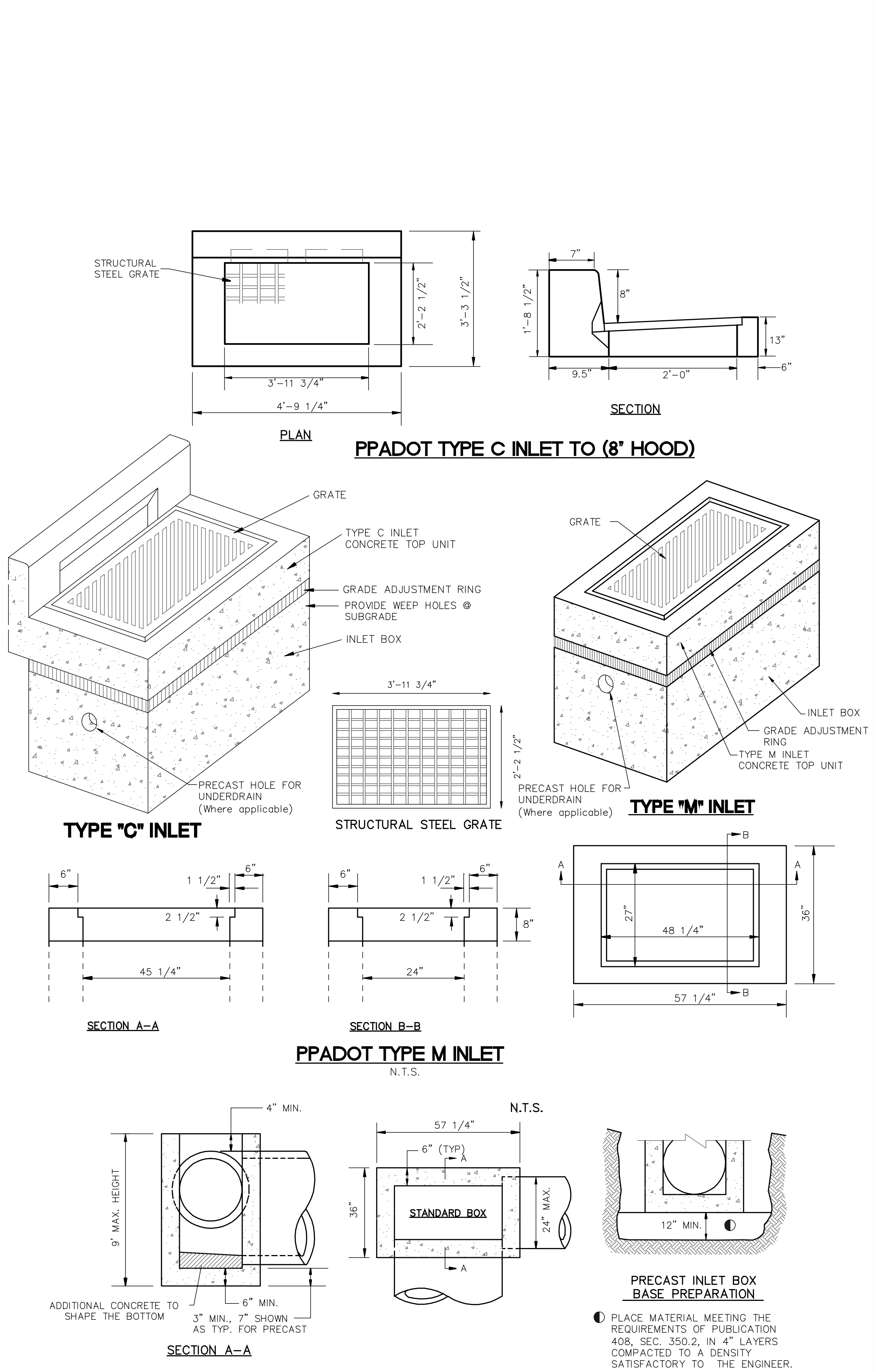
STRUCTURAL STEEL GRATE
3'-11 3/4"
4'-9 1/4"
2'-2 1/2"
3'-3 1/2"
1'-8 1/2"
3"
8"
9.5"
2'-0"
13"
6"
PLAN
SECTION
GRATE
TYPE C INLET CONCRETE TOP UNIT
GRADE ADJUSTMENT RING
PROVIDE WEEP HOLES @ SUBGRADE
INLET BOX
PRECAST HOLE FOR UNDERDRAIN (Where applicable)
TYPE M INLET CONCRETE TOP UNIT
STRUCTURAL STEEL GRATE
6"
1 1/2"
2 1/2"
45 1/4"
24"
8"
48 1/4"
57 1/4"
27"
36"
SECTION A-A
SECTION B-B
N.T.S.
4" MIN.
9' MAX. HEIGHT
57 1/4"
6" (TYP)
STANDARD BOX
36"
24" MAX.
12" MIN.
A
ADDITIONAL CONCRETE TO SHAPE THE BOTTOM
6" MIN.
3" MIN., 7" SHOWN AS TYP. FOR PRECAST

PPADOT TYPE C INLET TO (8' HOOD)

TYPE "C" INLET

TYPE "M" INLET

PPADOT TYPE M INLET

N.T.S.

SECTION A-A

PRECAST INLET BOX BASE PREPARATION

◐ PLACE MATERIAL MEETING THE REQUIREMENTS OF PUBLICATION 408, SEC. 350.2, IN 4" LAYERS COMPACTED TO A DENSITY SATISFACTORY TO THE ENGINEER.

NOTES:

1. ALL CONSTRUCTION SHALL BE IN ACCORDANCE WITH PENN DOT PUBLICATION 408, SECTION 714 AND STANDARDS FOR ROADWAY CONSTRUCTION, RC-34. CONTRACTOR SHALL VERIFY INLET BOX SIZING BASED ON PIPE SIZES AND ALIGNMENT PRIOR TO ORDERING PRECAST STRUCTURES. STRUCTURE SHALL BE CERTIFIED FOR H20 LOADING.
2. ALL DRAINAGE STRUCTURES SHALL HAVE POURED-IN-PLACE CONCRETE CHANNEL BOTTOMS.
3. ALL INLETS TO HAVE PENN DOT TYPE BICYCLE SAFE GRATES.
4. PROVIDE WEEP HOLES IN ALL INLET BOXES @ SUBGRADE TO ALLOW FOR DRAINAGE DURING CONSTRUCTION.
5. OPENINGS SHALL BE PROVIDED WHERE NECESSARY FOR PAVEMENT BASEDRAIN TIE-IN.
6. INLETS SHALL NOT HAVE A SUMP CONDITION IN THE BOTTOM. PIPES SHALL BE FLUSH WITH THE BOTTOM OF THE BOX OR CONCRETE CHANNELS SHALL BE POURED. SUMPED INLETS MAY BE PERMITTED WHERE SPECIFICALLY UTILIZED FOR WATER QUALITY PURPOSE.
7. INLETS MUST BE SIZED TO ACCEPT THE SPECIFIED PIPE SIZES WITHOUT KNOCKING OUT ANY INLET CORNERS.
8. ANY INLETS OR JUNCTION BOXES OVER FIVE FEET IN DEPTH SHALL BE EQUIPPED WITH LADDER RIGS.

STORM INLET DETAILS

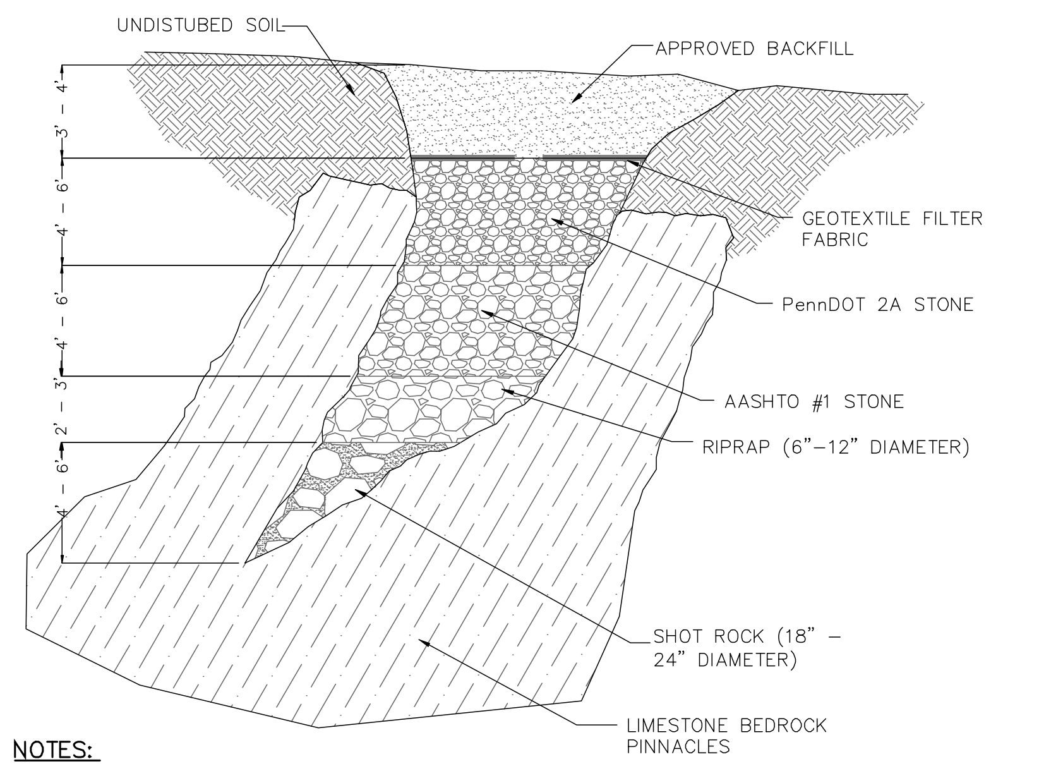
UNDISTUBED SOIL
APPROVED BACKFILL
3' - 4'
6'
GEOTEXTILE FILTER FABRIC
PennDOT 2A STONE
AASHTO #1 STONE
RIPRAP (6"-12" DIAMETER)
SHOT ROCK (18" – 24" DIAMETER)
LIMESTONE BEDROCK PINNACLES

NOTES:

1. THIS DETAIL IS A GENERAL REPAIR MEASURE FOR SINKHOLES. ALL ROCK SIZES AND DEPTHS ARE SUBJECT TO THE SIZE AND CONDITIONS OF THE SPECIFIC SINKHOLE. AS SUCH THE EXACT REPAIR FOR EACH SINKOLE ENCOUNTERED SHALL BE PER THE RECOMMENEDATION OF A GEOTECHNICAL ENGINEER. CONTRACTOR MUST COORDINATE WITH A GEOTECHNICAL ENGINEER FOR TO OBTAIN INSTRUCTIONS ON PROPER REPAIR MEASURES TO IMPLEMENT.
2. REASONABLE EFFORTS SHOULD BE MADE TO EXCAVATE ALL LOOSE AND UNSTABLE SOILS FROM THE BASE OF THE SINKHOLE (I.E. THROAT)
3. FLOWABLE FILL,IF USED,SHOULD BE ALLOWED TO CURE FOR A MINIMUM OF 24 HOURS PRIOR TO THE PLACEMENT OF THE FOLLOWING LAYERS WITHIN THE INVERTED FILTER.
4. THE FINAL LAYER OF STRUCTURAL FILL SHOULD BE PLACED IN LOOSE 12" LIFTS AND COMPACTED TO A MINIMUM OF 95% OF THE SOIL'S MAXIMUM MODIFIED DRY DENSITY.
5. INSTALLATION OF THE INVERTED FILTER SHOULD BE COMPLETED UNDER THE DIRECTION OF THE GEOTECHNICAL ENGINEER..

The repairs outlined above are general guidelines and each sinkhole occurrence should thoroughly be reviewed by the Geotechnical Engineer of Record for an appropriate remediation plan.

INVERTED FILTER SINKHOLE REPAIR DETAIL

NO SCALE

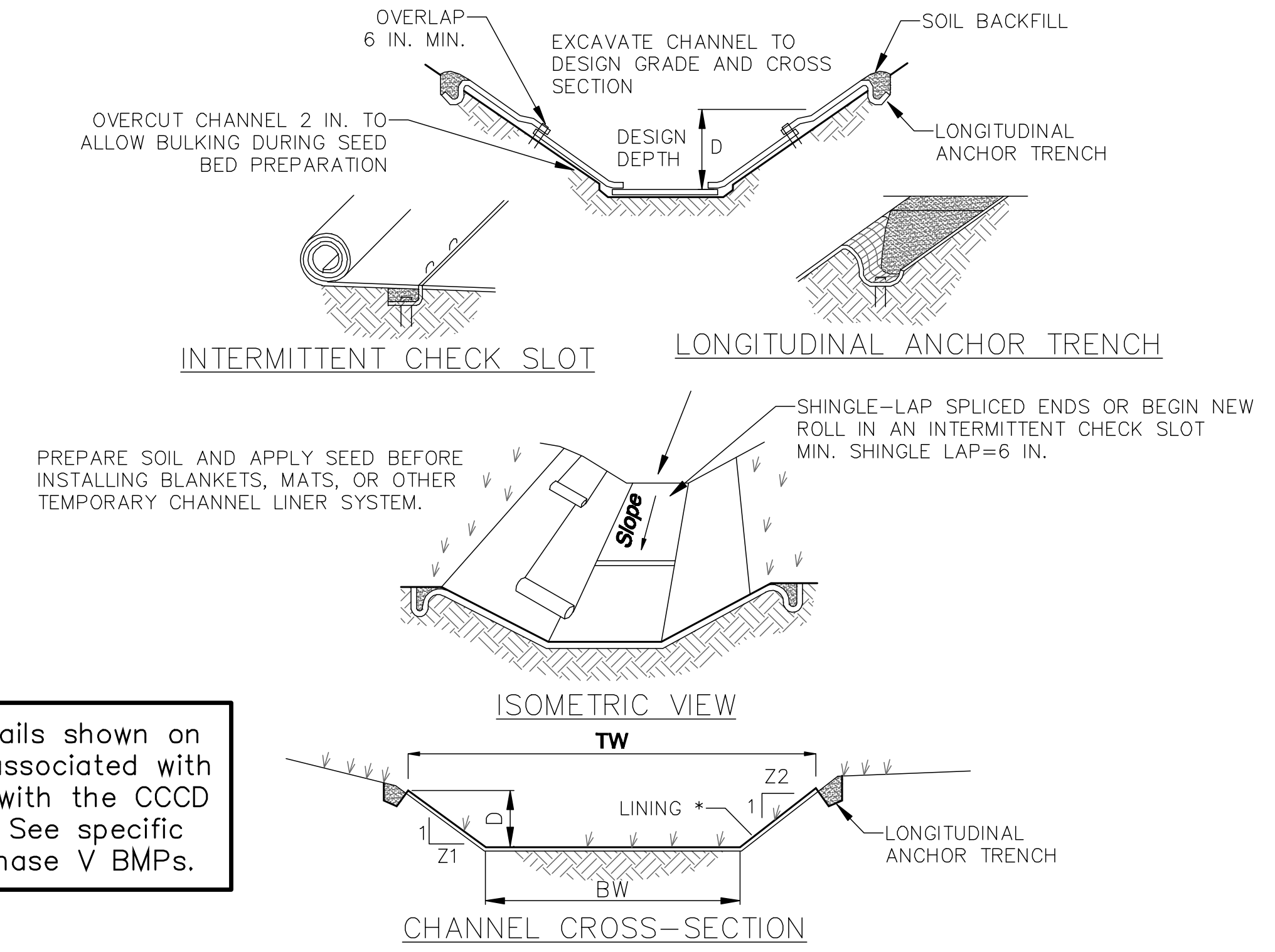
OVERLAP 6 IN. MIN.
EXCAVATE CHANNEL TO DESIGN GRADE AND CROSS SECTION
SOIL BACKFILL
OVERCUT CHANNEL 2 IN. TO ALLOW BULKING DURING SEED BED PREPARATION
DESIGN DEPTH
D
LONGITUDINAL ANCHOR TRENCH
INTERMITTENT CHECK SLOT
LONGITUDINAL ANCHOR TRENCH
SHINGLE-LAP SPLICED ENDS OR BEGIN NEW ROLL IN AN INTERMITTENT CHECK SLOT MIN. SHINGLE LAP=6 IN.
PREPARE SOIL AND APPLY SEED BEFORE INSTALLING BLANKETS, MATS, OR OTHER TEMPORARY CHANNEL LINER SYSTEM.
Slope
ISOMETRIC VIEW
TW
Z2
LINING *
1
LONGITUDINAL ANCHOR TRENCH
D
Z1
BW
CHANNEL CROSS-SECTION

For consistency the details shown on this plan include BMPs associated with all Phases as approved with the CCCD NPDES review process. See specific added references for Phase V BMPs.

* SEE MANUFACTURER'S LINING INSTALLATION DETAIL FOR STAPLE PATTERNS, VEGETATIVE STABILIZATION FOR SOIL AMENDMENTS, SEED MIXTURES AND MULCHING INFORMATION

	SWALE DESIGNATION	CHANNEL SLOPE (%)	Z1	Z2	BW (FT.)	D (MIN.) (FT.)	TW (MIN.) (FT.)	TEMPORARY LINING	PERMANENT LINING
Phase II	P1	8	3	3	4	1.1	10.6	N.A.G. C350	N.A.G. C350/CLASS D VEG.
	P2	2	3	3	3	2.0	15.0	N.A.G. SC250	N.A.G. SC250/CLASS D VEG.
	P2a	20	3	3	10	1.1	16.6	N.A.G. P300	N.A.G. P300/CLASS C VEG.
	P3	10	3	3	4	1.2	11.2	N.A.G. P550	N.A.G. P550/CLASS D VEG.
	P4	10	3	3	2	1.5	11	N.A.G. C350	N.A.G. C350/CLASS D VEG.
	*Ex. Hertzler	4	3	3	2	1.2	9.2	N.A.G. SC250	N.A.G. SC250/CLASS D VEG.
	**T1	4	3	3	4	1.2	11.2	N.A.G. P300	N.A.G. P300/CLASS D VEG.
Future Phase	P5	3.3	3	3	2	1.1	8.6	N.A.G. SC250	N.A.G. SC250/CLASS D VEG.
Phase 5	**P6**	**1.5**	**3**	**3**	**2**	**1.5**	**11**	**N.A.G. SC250**	**N.A.G. SC250/CLASS D VEG.**
	P7a	**1.5**	**3**	**3**	**4**	**2.5**	**19**	**N.A.G. SC250**	**N.A.G. SC250/CLASS D VEG.**
	P7b	**1.5**	**3**	**3**	**4**	**2.5**	**19**	**N.A.G. SC250**	**N.A.G. SC250/CLASS D VEG.**
	P8	**1-4**	**3**	**3**	**2**	**1.5**	**11**	**N.A.G. SC250**	**N.A.G. SC250/CLASS D VEG.**
Future Phase	P9	1.2	3	3	2	1.0	8	N.A.G. SC250	N.A.G. SC250/CLASS D VEG.
Phase 5	**P10**	**2.5**	**3**	**3**	**2**	**1.2**	**9.2**	**N.A.G. SC250**	**N.A.G. SC250/CLASS D VEG.**
	P11	**1.0**	**3**	**3**	**2**	**1.5**	**11**	**N.A.G. SC250**	**N.A.G. SC250/CLASS D VEG.**
Future Phases	P12	1.5	3	3	2	1.5	11	N.A.G. SC250	N.A.G. SC250/CLASS D VEG.
	P13	1.2	3	3	2	1.5	11	N.A.G. SC250	N.A.G. SC250/CLASS D VEG.
	P14	1.4	3	3	2	1.5	11	N.A.G. SC250	N.A.G. SC250/CLASS D VEG.
	P15	11	3	3	2	1	8	N.A.G. SC250	N.A.G. SC250/CLASS D VEG.
	P16	1.2	3	3	2	1.5	11	N.A.G. SC250	N.A.G. SC250/CLASS D VEG.
	P17	2	3	3	2	1.2	9.2	N.A.G. SC250	N.A.G. SC250/CLASS D VEG.

* Hertzler Road swale exist although data provided for reconstruction if needed in future.
** Temporary swale T1 shall receive swale P3 runoff until future phase construction
N.A.G. SC250 is a permanent vegetative lined; North American Green Product

NOTES:

ANCHOR TRENCHES SHALL BE INSTALLED AT BEGINNING AND END OF CHANNEL IN THE SAME MANNER AS LONGITUDINAL ANCHOR TRENCHES. CHANNEL DIMENSIONS SHALL BE CONSTANTLY MAINTAINED.

CHANNEL SHALL BE CLEANED WHENEVER TOTAL CHANNEL DEPTH IS REDUCED BY 25% AT ANY LOCATION. SEDIMENT DEPOSITS SHALL BE REMOVED WITHIN 24 HOURS OF DISCOVERY OR AS SOON AS SOIL CONDITIONS PERMIT ACCESS TO CHANNEL WITHOUT FURTHER DAMAGE. DAMAGED LINING SHALL BE REPAIRED OR REPLACED WITHIN 48 HOURS OF DISCOVERY.

NO MORE THAN ONE THIRD OF THE SHOOT (GRASS LEAF) SHALL BE REMOVED IN ANY MOWING. GRASS HEIGHT SHALL BE MAINTAINED BETWEEN 2 AND 3 INCHES UNLESS OTHERWISE SPECIFIED. EXCESS VEGETATION SHALL BE REMOVED FROM PERMANENT CHANNELS TO ENSURE SUFFICIENT CHANNEL CAPACITY.

STANDARD CONSTRUCTION DETAIL #6-1
VEGETATED CHANNEL

For consistency the details shown on this plan include BMPs associated with all Phases as approved with the CCCD NPDES review process. The Phase V riprap aprons included A32, A34, B8 and B39. Riprap apron J1 is also located in Phase V (Basin 5 discharge) although was previously installed with trail installation.

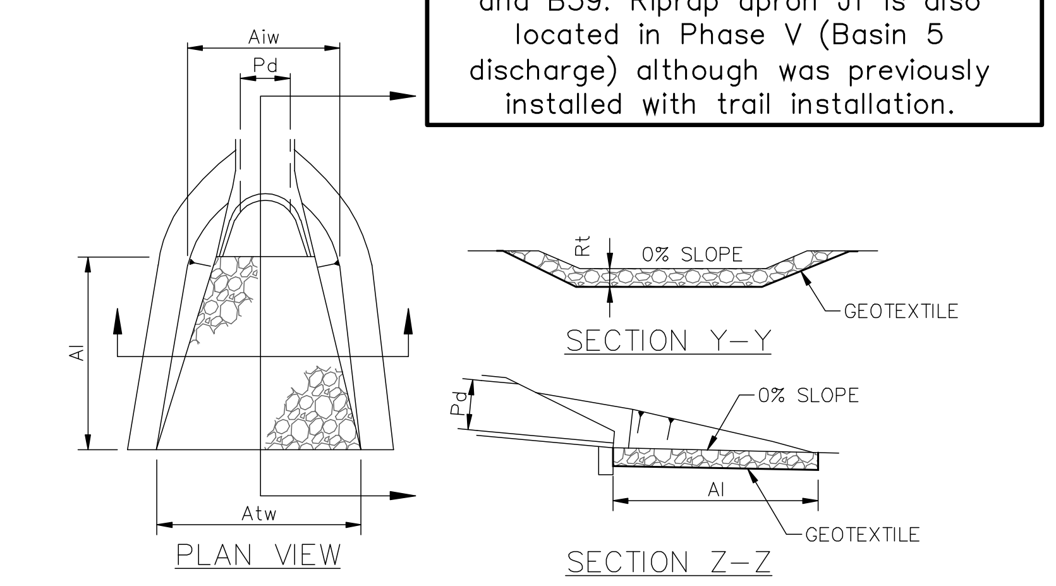
Aiw
Pd
Al
Atw
PLAN VIEW
Rt
0% SLOPE
GEOTEXTILE
SECTION Y-Y
Pd
0% SLOPE
Al
GEOTEXTILE
SECTION Z-Z

Outlet No.	Pipe Dia. Do (in)	Tail Water Condition (Max/Min)	Man. "n" For Pipe	Pipe Slope (%)	*Q (cfs)	**V (fps)	Riprap Size	Rt (in)	Al (ft)	Aiw (ft)	Atw (ft)
A1	30	Min	0.012	2.50	41.5	9.2	R-5	27	23	7.5	30.5
A10	24	Min	0.012	2.00	32.4	11.2	R-5	27	16	6	22
***A27	42	Min	0.012	1.00	57	11.3	R-5	27	22	10.5	32.5
A25	18	Min	0.012	1.00	7.3	8.0	R-4	18	8	4.5	12.5
A32	18	Min	0.012	0.83	6.2	6.1	R-4	18	8	4.5	12.5
A34	36	Min	0.012	1.00	39.5	8.4	R-5	27	20	9	29
A51	18	Min	0.012	2.50	12.9	8.4	R-4	18	12	4.5	16.5
******6	24	Min	0.012	1.43	10.0	8.4	R-4	18	12	6	18
****F1	36	Min	0.012	1.00	47	10.9	R-5	27	20	9	29
****J1	30	Min	0.012	1.00	37	10.1	R-5	27	16	7.5	23.5
B1	24	Min	0.012	3.67	25.4	8.4	R-5	27	16	6	22
B8	36	Min	0.012	0.90	58.3	9.5	R-5	27	21	9	30
B39	15	Min	0.012	2.56	4.6	6.9	R-4	18	8	3.75	11.75
C1	24	Min	0.012	3.08	33.7	10.4	R-5	27	20	6	26

* 100 Year storm event
** The anticipated velocity (V) should not exceed the maximum permissible shown in Table 6.6 for the proposed riprap protection. Adjust for less than full pipe flow. Use Manning's equation to calculate velocity for pipe slopes > 0.05 ft/ft.
***A27 apron includes flow from A29 as well; discharge to same conservatively designed apron.
***** F1 & J1 aprons exist. Original design reflected above; now received reduced basin discharges.
Designs for future phase "B & C" systems shall be provided with future phase submission.
******6 – Basin 6 discharge was conservatively assumed to be 10 cfs while actual is less.
All pipe end treatments shall be Concrete End Wall (RC-31M)

NOTES:

ALL APRONS SHALL BE CONSTRUCTED TO THE DIMENSIONS SHOWN. TERMINAL WIDTHS SHALL BE ADJUSTED AS NECESSARY TO MATCH RECEIVING CHANNELS.

ALL APRONS SHALL BE INSPECTED AT LEAST WEEKLY AND AFTER EACH RUNOFF EVENT. DISPLACED RIPRAP WITHIN THE APRON SHALL BE REPLACED IMMEDIATELY.

STANDARD CONSTRUCTION DETAIL #9-1
RIPRAP APRON AT PIPE OUTLET
WITH FLARED END SECTION OR ENDWALL

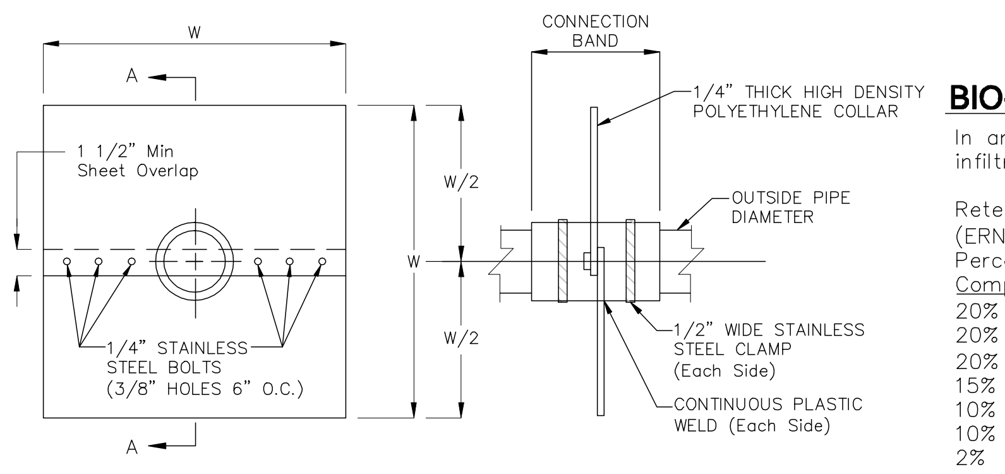
W
A
1 1/2" Min Sheet Overlap
W/2
W
W/2
1/4" STAINLESS STEEL BOLTS (3/8" HOLES 6" O.C.)
A
CONNECTION BAND
1/4" THICK HIGH DENSITY POLYETHYLENE COLLAR
OUTSIDE PIPE DIAMETER
1/2" WIDE STAINLESS STEEL CLAMP (Each Side)
CONTINUOUS PLASTIC WELD (Each Side)

INSTALLATION INSTRUCTIONS:
APPLY TAR OR MASTIC TO COLLAR AND LAY PIPE ON COLLAR. APPLY MASTIC TO TOP HALF OF COLLAR AND SET IN PLACE LINING UP RED STRIPES AND BOLT TWO HALVES TOGETHER. INSTALL METAL BANDS ON SPLIT HALVES OF COLLAR. TIGHTEN BOLTS AND BANDS. APPLY MASTIC AS NEEDED TO INSURE GOOD WATERTIGHT SEAL. BACKFILL AND TAMP ACCORDINGLY. ABOVE PRODUCT CAN BE PURCHASED FROM SCHEIB PRODUCTS (660-446-2343); EQUIVALENT PRODUCT CAN BE USED.

	BASIN OUTLET	# COLLARS	W (ft)
Phase II →	4A	3	6
Phase II →	4B	2	5
Phase V →	5	2	6
Future Phase →	6	2	5

GENERAL NOTES
1. INSTALL COLLARS INSIDE OF EMBANKMENT CORE.
2. ANTI-SEEP COLLAR AND CONNECTION TO THE PIPE (BARREL) MUST BE WATERTIGHT.
3. COLLARS SHOULD NOT BE LOCATED CLOSER THAN 2 FEET TO A PIPE JOINT.

ANTI-SEEP COLLAR DETAIL

N.T.S.

BIO-RETENTION BASIN SEEDING

In an effort to improve water quality of surface water runoff and increase infiltration the following special seed mix is proposed for all Basins.

Retention Basin Floor Seeding – Low Maintenance
(ERNMX-126 by Ernst Conservation Seeds 1-800-873-3321)

Percent Composition	Common Name	Scientific Name
20%	Redtop	Agrostis Alba (A. gigantea)
20%	Virginia Wild Rye, PA Ecotype	Elymus virginicus, PA Ecotype
20%	Nuttal's Alkaligrass	Puccinelliea nuttalliana
15%	Fox Sedge, PA Ecotype	Carex vulpinoidea, PA Ecotype
10%	Creeping Bentgrass	Agrostis stolonifera
10%	Fowl Bluegrass	Poa palustris
2%	Autumn Bentgrass, APB	Agrostis perennans, APB
2%	Ticklegrass (Rough Bentgrass), PA Ecotype	Agrostis scabra, PA Ecotype
1%	Path Rush, PA Ecotype	Juncus tenius, PA Ecotype

Recommended seeding rate: 20-40 lbs/acre

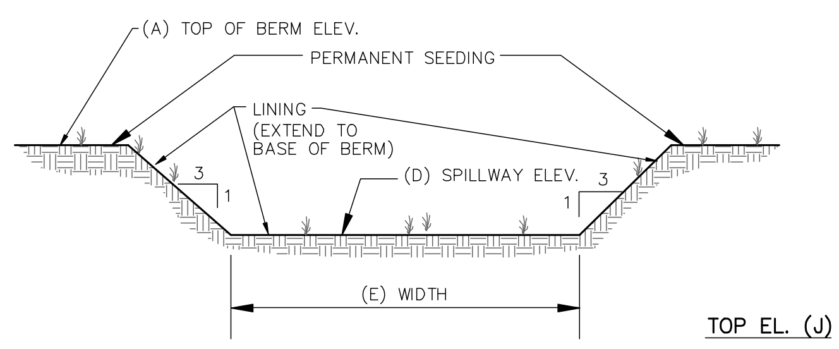
(A) TOP OF BERM ELEV.
PERMANENT SEEDING
LINING (EXTEND TO BASE OF BERM)
(D) SPILLWAY ELEV.
3
1
3
1
(E) WIDTH

EMERGENCY SPILLWAY DETAIL

N.T.S.

TRASH RACK TABLE

REFERENCE	*(A)	(B)	(C)	(D)
REFERENCE	1 1/2"	9"	6"	12"

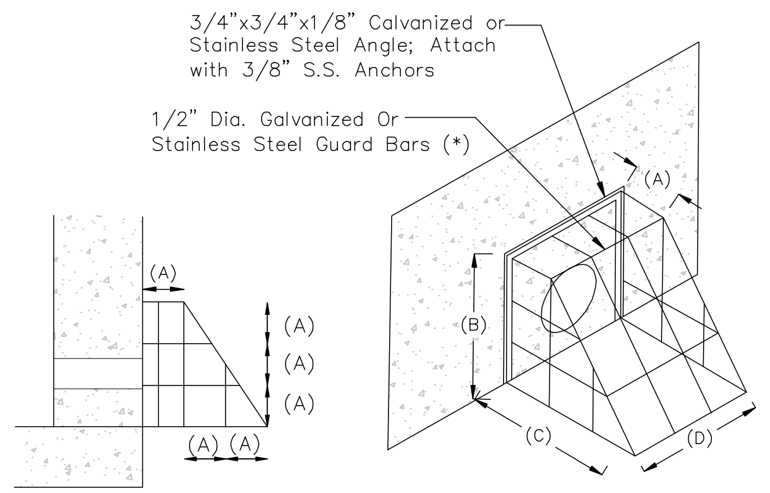
3/4"x3/4"x1/8" Calvanized or Stainless Steel Angle; Attach with 3/8" S.S. Anchors
1/2" Dia. Galvanized Or Stainless Steel Guard Bars (*)
(A)
(A)
(A)
(A)
(A) (A)
(B)
(C)
(D)
NTS

LOW FLOW ORIFICE SCREEN DETAIL

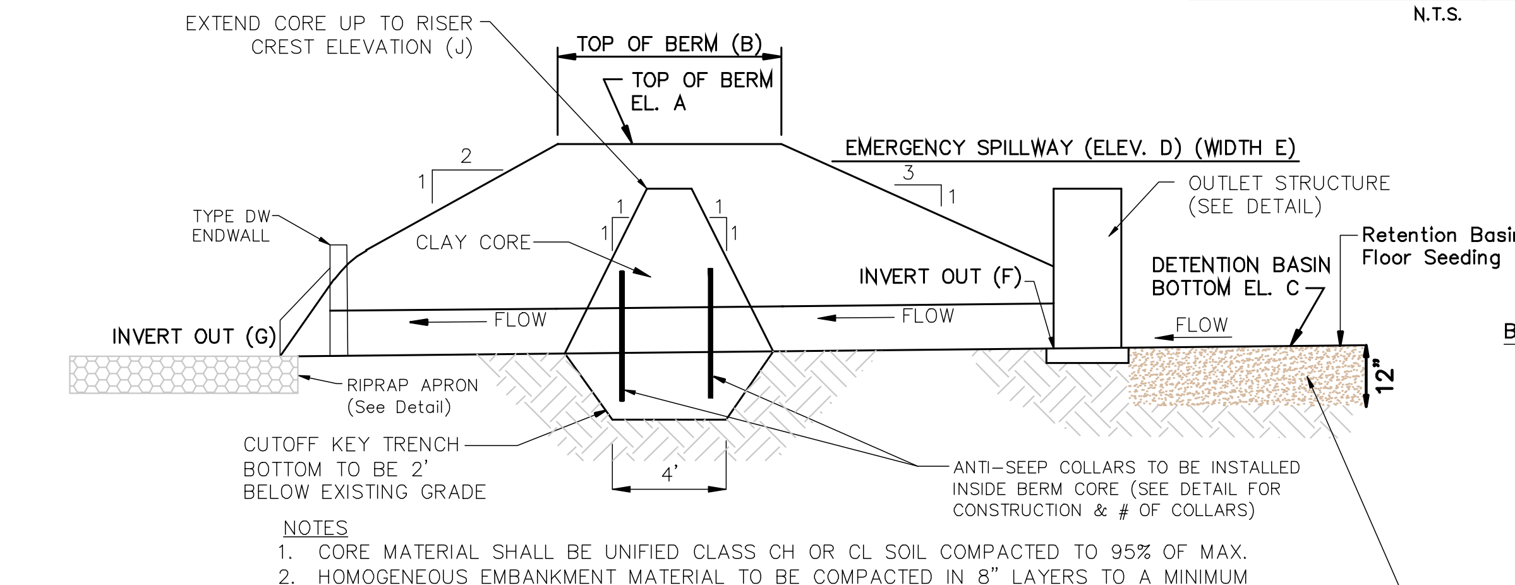
EXTEND CORE UP TO RISER CREST ELEVATION (J)
TOP OF BERM (B)
TOP OF BERM EL. A
2
1
EMERGENCY SPILLWAY (ELEV. D) (WIDTH E)
3
1
OUTLET STRUCTURE (SEE DETAIL)
Retention Basin Floor Seeding
TYPE DW ENDWALL
CLAY CORE
INVERT OUT (F)
DETENTION BASIN BOTTOM EL. C
INVERT OUT (G)
FLOW
FLOW
FLOW
12"
RIPRAP APRON (See Detail)
CUTOFF KEY TRENCH BOTTOM TO BE 2' BELOW EXISTING GRADE
4'
ANTI-SEEP COLLARS TO BE INSTALLED INSIDE BERM CORE (SEE DETAIL FOR CONSTRUCTION & # OF COLLARS)

NOTES
1. CORE MATERIAL SHALL BE UNIFIED CLASS CH OR CL SOIL COMPACTED TO 95% OF MAX.
2. HOMOGENEOUS EMBANKMENT MATERIAL TO BE COMPACTED IN 8" LAYERS TO A MINIMUM FINAL DENSITY OF NOT LESS THAN 95% OF MAX. DRY DENSITY WITHIN 2% ± OPTIMUM MOISTURE CONTENT. (ASTM METHOD D698).

SOIL AMENDMENT MIXTURE TO BE A WELL BLENDED SANDY LOAM TOPSOIL WITH MIN. 5% SAND. ORGANIC MATTER (COMPOST) SHALL COMPRISE 30%. NATIVE TOPSOIL TO COMPRISE 65%. (See Sequence Notes)

BASIN SECTION AT OUTLET

N.T.S.

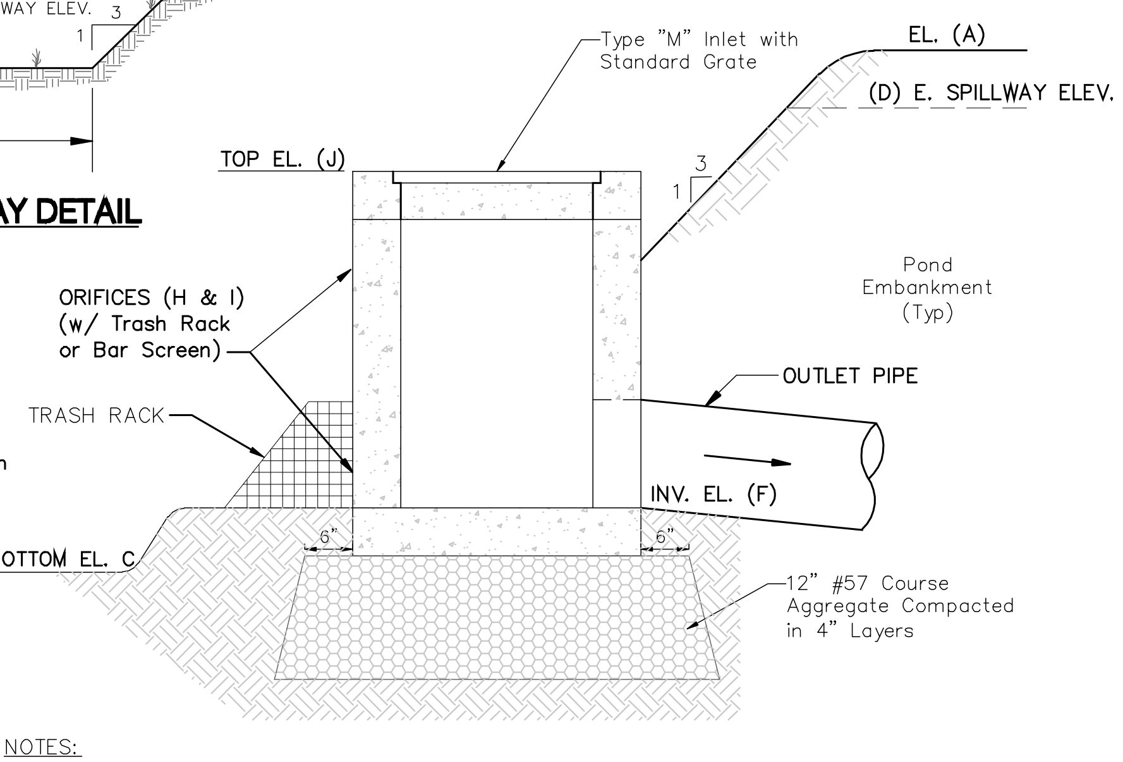
Type "M" Inlet with Standard Grate
EL. (A)
(D) E. SPILLWAY ELEV.
TOP EL. (J)
ORIFICES (H & I) (w/ Trash Rack or Bar Screen)
Pond Embankment (Typ)
OUTLET PIPE
TRASH RACK
INV. EL. (F)
BOTTOM EL. C
6"
6"
12" #57 Course Aggregate Compacted in 4" Layers

NOTES:
1. CONSTRUCT OUTLET STRUCTURE IN ACCORDANCE WITH PENN DOT STANDARDS, RC-34 FOR PRECAST CONCRETE INLETS.
2. BOTTOM ORIFICE SHALL BE PROTECTED BY LOW FLOW ORIFICE TRASH RACK AND ALL HIGHER ORIFICES (IF APPLICABLE) SHALL BE PROVIDED WITH BAR RACKS (SEE DETAILS).

STORMWATER BASIN OUTLET STRUCTURE DETAIL

N.T.S.

BASIN 4B, 5 & 6 OUTFALL PIPES SHALL BE CONSTRUCTED WITH A CONCRETE CRADLE. ALL BASINS BERMS SHALL BE CONSTRUCTED IN ACCORDANCE WITH STANDARD CONSTRUCTION DETAIL #7-6 INCLUDING ANTI-SEEP COLLARS INSTALLED IN BERM CORE. NO CRADLE NEEDED FOR PORTIONS OF OUTFALL PIPES PREVIOUSLY INSTALLED WITH TRAIL INSTALLATION.

For consistency the details shown on this plan include BMPs associated with all Phases as approved with the CCCD NPDES review process. See specific added references for Phase V BMPs.

		TOP OF BERM		BOTTOM	EMERGENCY SPILLWAY			DISCHARGE			ORIFICE(s)				OUTLET STRUCTURE
	BASIN ID	A	B	C	D	E	LINING	F	PIPE	G	SIZE (H)	ELEV. (H)	SIZE (I)	ELEV. (I)	GRATE (J)
Phase 2 →	4A	466.0	8'	457.5	464.5	175'	* SC250	455.8	80'-36" HDPE @ 1.00%	455.0	3" Dia.	457.8	48'Wx6"H	462.0	**463.5 (24"x72")
Phase 2 →	4B	474.0	8'	469.0	472.6	130'	* SC250	467.5	50'-24" HDPE @ 2.00%	466.5	3" Dia.	469.3	–	–	**471.8 (24"x72")
Phase 5 →	**5**	**468.0**	**8'**	**463.0**	**466.5**	**220'**	*** SC250**	**460.8**	**60'-30" HDPE @ 1.00%**	**460.2**	**3" Dia.**	**463.3**	**24"Wx12"H**	**464.0**	**466.0**
Future Phase →	6	484.0	8'	479.0	482.5	90'	* SC250	478.5	35'-24" HDPE @ 1.43%	478.0	3" Dia.	479.3	–	–	482.0

* SC250 Liner – as manufactured by North American Green, Inc.
** Basins 4A and 4B outlet structures shall be 24" x 72" in-lieu-of standard 24"x48".

STORMWATER BASIN DETAIL

	REVISIONS	DATE
1.	PPL Utility Pole location updates (PPL replaced existing poles)	2-17-2023
2.	Addressing Review Comments	3-7-2023
3.	Addressing Sanitary Sewer Comments	5-22-2023
4.	Addressing Review Comments	11-16-2023
5.	–	–
6.	–	–
7.	–	–
8.	–	–
9.	–	–

M:\Drawings\2022\202236 Autumn Chase V\202236 PCSM.dwg 11/20/2023 10:29:32 AM EST

MELLOTT ENGINEERING, INC.
Civil Engineering • Land Planning & Development • Water Resources
7500 Devonshire Heights Road • Hummelstown, PA 17036
mellotteng@comcast.net
717-566-6533

PCSM #3

POST CONSTRUCTION STORMWATER MANAGEMENT
CONSTRUCTION DETAILS
FOR
AUTUMN CHASE PRD - PHASE V
Land Developer: Hertzler Road Associates, L.P.
UPPER ALLEN TOWNSHIP CUMBERLAND COUNTY PENNSYLVANIA

Project No. 202236
Date February 1, 2023

Sheet No.
PCSM #3
12 of 21

LANDSCAPING NOTES

Landscaping shall be provided with Autumn Chase PRD Phase IV as indicated on this plan. The landscaping associated with this Phase V plan consists of street trees along all roads, stormwater basin #5 landscaping and an additional (30) deciduous trees are proposed to offset (28) street trees that cannot be installed within the PPL right of way and (11) trees required along future Phase IV Basin #6. Street trees shall be planted on each side of all streets at an average rate of 1 tree every 50'. The (39) additional deciduous trees shall be installed as follows: (9) trees shall be planted in the open space area around the Gazebo (these nine trees are associated with offset of Basin 6 plantings and are therefore shown on the Phase IV plans; note added in this Phase V plan for reference only – see Master Plan for overview of entire community), (22) trees shall be planted along the nature trail which is located along the site's eastern property boundary and (8) trees shall be planted on the north side of Stormwater Basin 5.

Required Landscape Area	Buffer Type	Buffer Area (lf)	# of Trees Required		
SWM Area # 5	3	220	Deciduous (per 30')	Evergreen (per 10')	Shrub (per 10')
			8	22	22
			# of Trees Proposed		
			Deciduous	Evergreen	Shrub
			8	22	22
		Difference	0	0	0

Street Trees			
LF of ROW	Required (per 50')	Proposed	Difference
4900	98	79	-19

See above landscaping notes for documentation of the additional deciduous tree plantings proposed to offset the trees that can not be installed under the power lines.

Planting Sizes:

- At time of planing street trees shall be a minimum 2" caliper measured 6" above finished grade.
- At time of planing evergreen trees shall be 6' in height.

LANDSCAPE NOTES

The Owner/Developer has the option to modify/change the landscaping and planting list, provided the landscaping proposed is reviewed and approved by Township.

Street trees are proposed which upon maturing will create a canopy effect.

All disturbed areas shall be stabilized. Refer to Erosion and Sediment Pollution Control Plan for temporary and permanent topsoil and seeding requirements, stabilization techniques and specifications.

Street trees shall be planted as not to interfere with utilities, roadways, clear sight triangles, sanitary sewer and storm water facilities.

SHORT TERM LANDSCAPE MAINTENANCE PLAN

1. The landscape contractor and/or developer/lot owners shall be responsible for watering landscaping material during and after installation.
2. Lawn areas shall be watered once weekly during dry periods of the first growing season to establish healthy grass. Watering should occur during the early part of the day to an even saturation depth of one inch.
3. Newly planted trees shall be watered regularly during the dry periods to completely saturate the root ball during the first growing season.
4. Disease, insect and weed control and prevention should be performed in accordance with manufacturer's recommendations.
5. Newly installed plantings shall be selectively pruned if necessary to provide a neat, uniform appearance. Any dead or broken branches shall be removed. All noticeably diseased or damaged plant material shall be removed and replaced prior to final acceptance.
6. All guying and staking shall be maintained regularly to assure plant stabilization and straight, uniform growth for at least the first year following the date of planting.
7. All plant material shall be true to species and variety and shall conform to measurements and minimum standards as set forth in the plant schedule.
8. All plant materials and lawn areas are to be guaranteed by the contractor for a period of one year from date of installation.

LONG TERM LANDSCAPE MAINTENANCE PLAN

1. Maintenance of trees, shrubs and grass on individual lots shall be the responsibility of the lot owner.
2. Maintenance of street trees located within a public right-of way or easement shall be the responsibility of the property owner whose property directly fronts that portion of right-of-way or easement.
3. Maintenance of all landscaping located in an Open Space Area and within the public right-of-way shall be the responsibility of the Homeowners Association.
4. The lot owner shall be responsible for regular mowing, clean-up, and grooming of all lawn and planted areas.

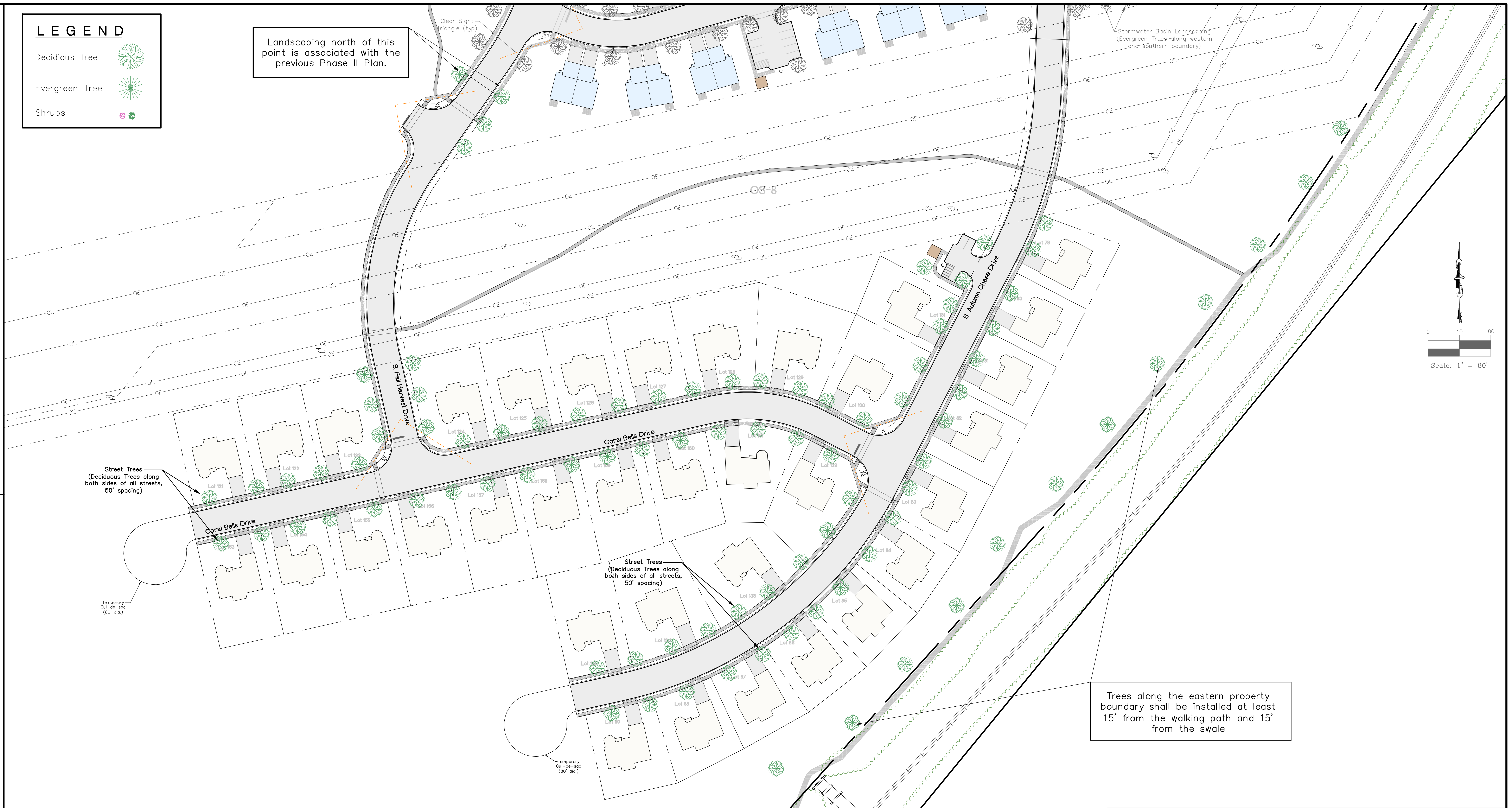
LEGEND
Decidious Tree
Evergreen Tree
Shrubs
Clear Sight Triangle (typ)
S. Fall Harvest Drive
Coral Bells Drive
S. Autumn Chase Drive
Street Trees (Deciduous Trees along both sides of all streets, 50' spacing)
Temporary Cul-de-sac (80' dia.)
Stormwater Basin Landscaping (Evergreen Trees along western and southern boundary)
Scale: 1" = 80'
0
40
80

Landscaping north of this point is associated with the previous Phase II Plan.

Trees along the eastern property boundary shall be installed at least 15' from the walking path and 15' from the swale

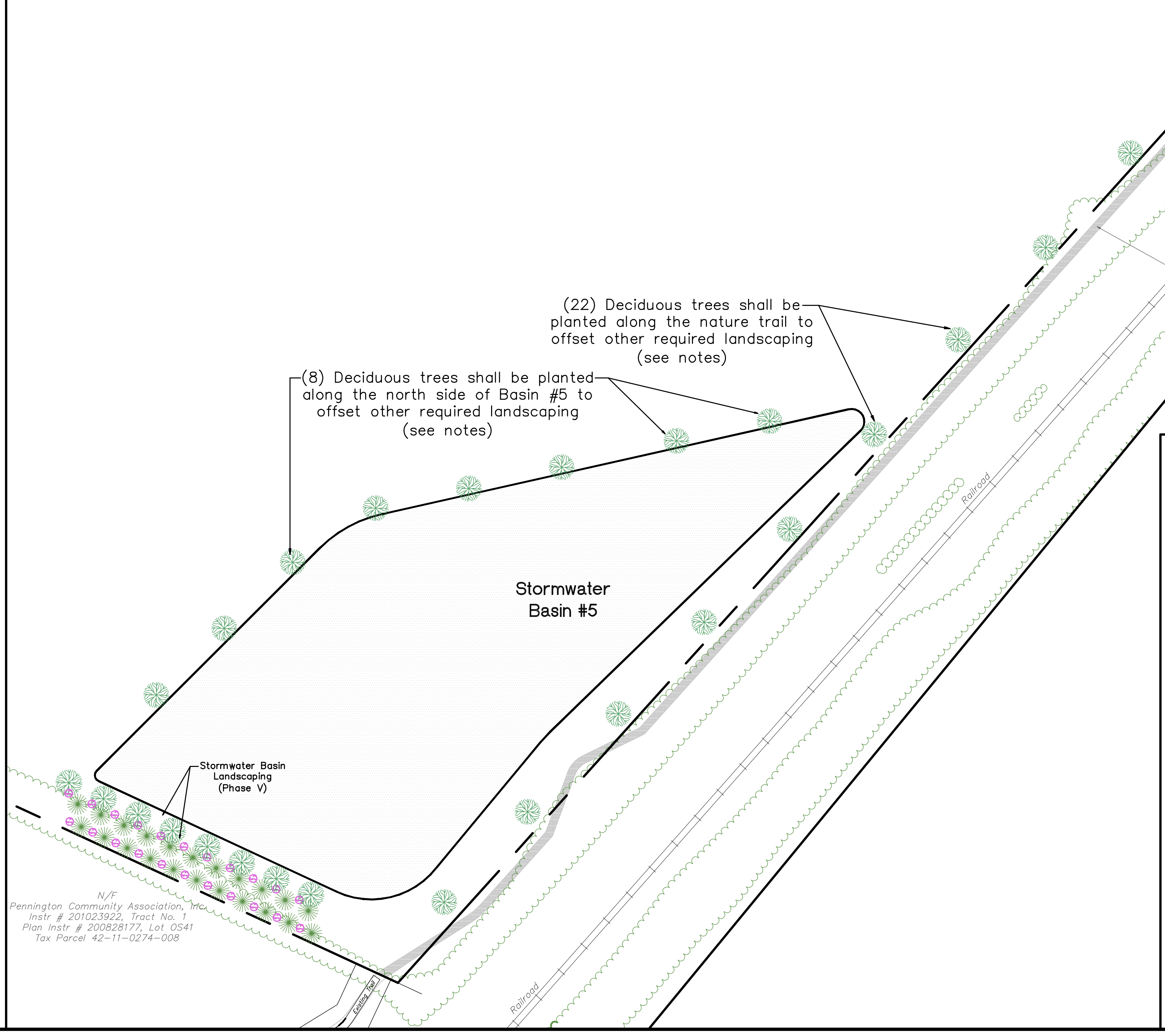
Stormwater Basin #5
Stormwater Basin Landscaping (Phase V)
N/F
Pennington Community Association, Inc.
Instr # 201023922, Tract No. 1
Plan Instr # 200828177, Lot OS41
Tax Parcel 42-11-0274-008
Existing Trail
Railroad

(22) Deciduous trees shall be planted along the nature trail to offset other required landscaping (see notes)

(8) Deciduous trees shall be planted along the north side of Basin #5 to offset other required landscaping (see notes)

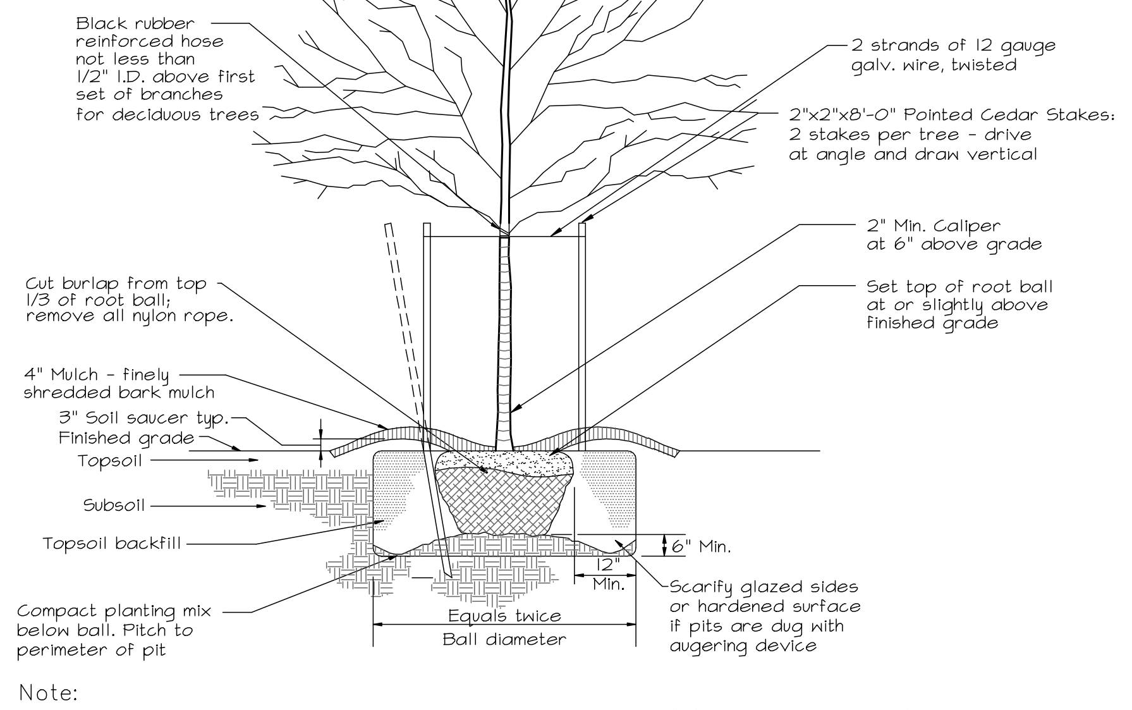
Black rubber reinforced hose not less than 1/2" I.D. above first set of branches for deciduous trees
2 strands of 12 gauge galv. wire, twisted
2"x2"x8'-0" Pointed Cedar Stakes: 2 stakes per tree - drive at angle and draw vertical
2" Min. Caliper at 6" above grade
Set top of root ball at or slightly above finished grade
Cut burlap from top 1/3 of root ball; remove all nylon rope.
4" Mulch - finely shredded bark mulch
3" Soil saucer typ.
Finished grade
Topsoil
Subsoil
Topsoil backfill
Compact planting mix below ball. Pitch to perimeter of pit
6" Min.
12" Min.
Equals twice Ball diameter
Scarify glazed sides or hardened surface if pits are dug with augering device

Note:

1. Street trees must be planted at an average of (2) trees every 100' and shall be placed a minimum of 40' apart along the street right-of-way and shall be located so as to maximize the growth potential of the plan material, minimize the potential for root interference with public infrastructure, and enhance the quality of the development. Street trees will be one of the species identified in Section 220-26.D.(7) of the Upper Allen Township Subdivision and Land Development Ordinance. (See plan for general layout).

DECIDUOUS STREET TREE PLANTING DETAIL

N.T.S.

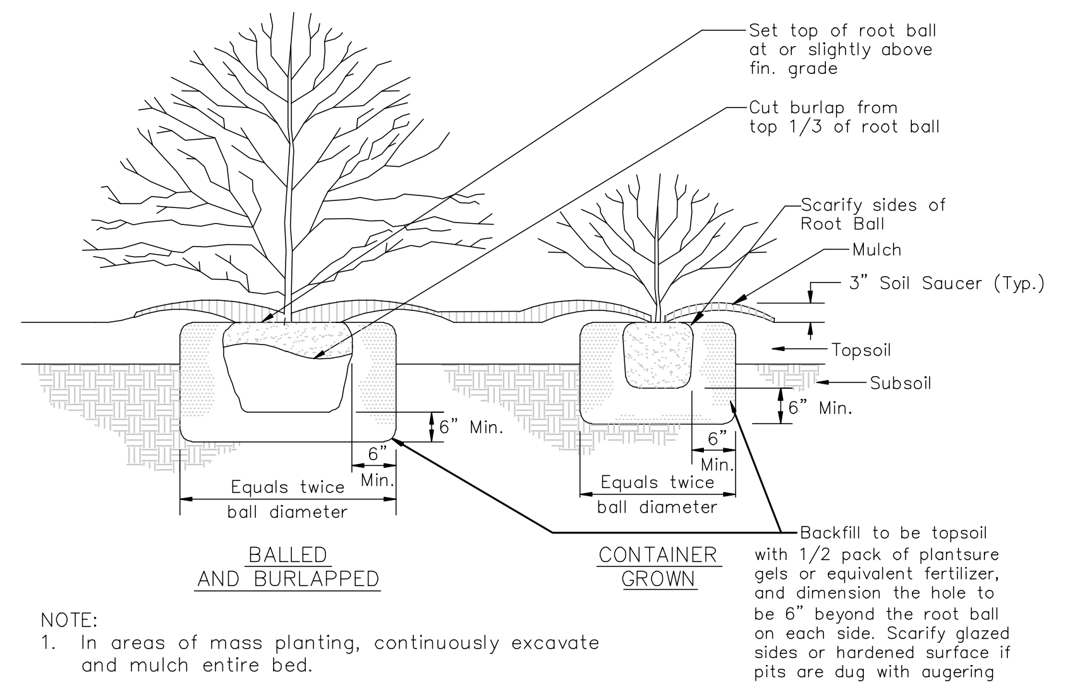
Set top of root ball at or slightly above fin. grade
Cut burlap from top 1/3 of root ball
Scarify sides of Root Ball
Mulch
3" Soil Saucer (Typ.)
Topsoil
Subsoil
6" Min.
6" Min.
Equals twice ball diameter
BALLED AND BURLAPPED
CONTAINER GROWN
Backfill to be topsoil with 1/2 pack of plantsure gels or equivalent fertilizer, and dimension the hole to be 6" beyond the root ball on each side. Scarify glazed sides or hardened surface if pits are dug with augering devices

NOTE:

1. In areas of mass planting, continuously excavate and mulch entire bed.

SHRUB PLANTING

N.T.S.

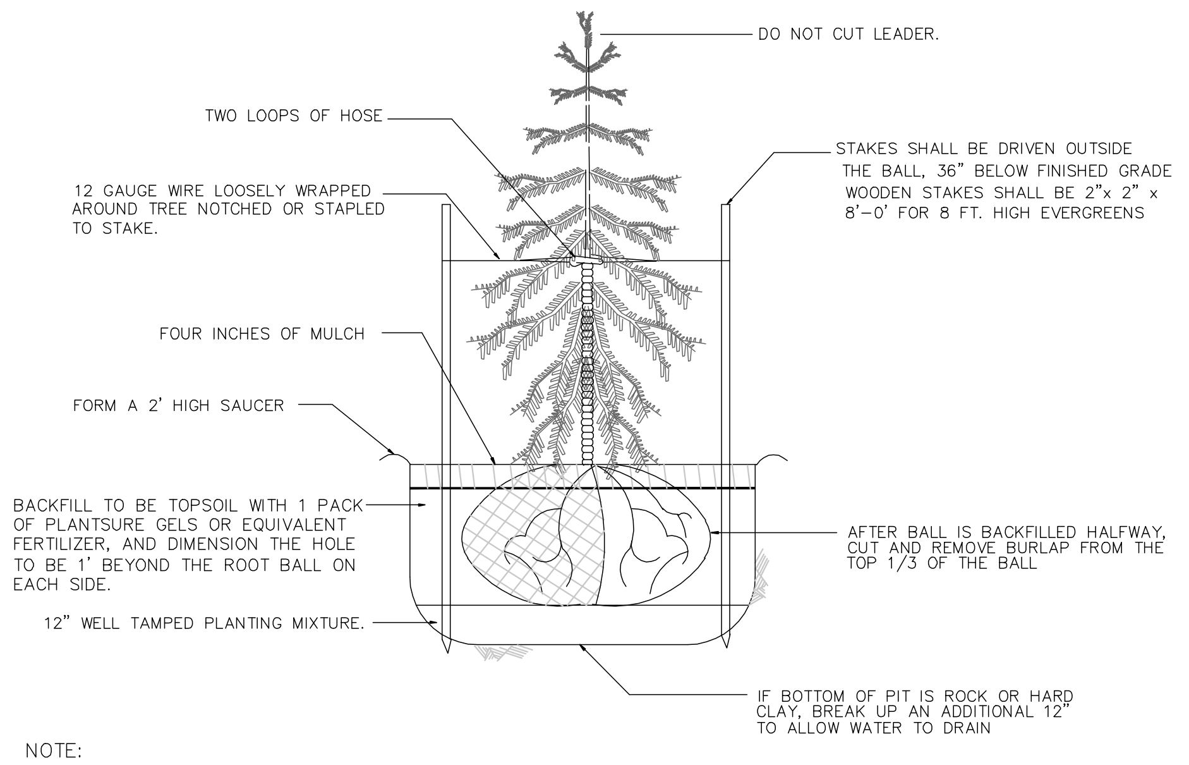
DO NOT CUT LEADER.
TWO LOOPS OF HOSE
STAKES SHALL BE DRIVEN OUTSIDE THE BALL, 36" BELOW FINISHED GRADE WOODEN STAKES SHALL BE 2"x 2" x 8'-0' FOR 8 FT. HIGH EVERGREENS
12 GAUGE WIRE LOOSELY WRAPPED AROUND TREE NOTCHED OR STAPLED TO STAKE.
FOUR INCHES OF MULCH
FORM A 2' HIGH SAUCER
BACKFILL TO BE TOPSOIL WITH 1 PACK OF PLANTSURE GELS OR EQUIVALENT FERTILIZER, AND DIMENSION THE HOLE TO BE 1' BEYOND THE ROOT BALL ON EACH SIDE.
AFTER BALL IS BACKFILLED HALFWAY, CUT AND REMOVE BURLAP FROM THE TOP 1/3 OF THE BALL
12" WELL TAMPED PLANTING MIXTURE.
IF BOTTOM OF PIT IS ROCK OR HARD CLAY, BREAK UP AN ADDITIONAL 12" TO ALLOW WATER TO DRAIN

NOTE:

1. PLANT SHALL BEAR SAME RELATIONSHIP TO FINISHED GRADE AS IT DID IN ITS PREVIOUS LOCATION.
2. TIE TREE WRAP AT THE TOP AND BOTTOM AND AT 18" INTERVALS ALONG THE TRUNK

PLANTING AND STAKING METHODS FOR EVERGREEN TREES

NO SCALE

REVISIONS	DATE
1. PPL Utility Pole location updates (PPL replaced existing poles)	2-17-2023
2. Addressing Review Comments	3-7-2023
3. Addressing Sanitary Sewer Comments	5-22-2023
4. Addressing Review Comments	11-16-2023
5. Added conditions notes to cover, setback notes to sheets 4 & 5 & shifted trees	1-4-2024
6. Added note regarding tree separation to trail and swale	1-12-2024
7. –	–
8. –	–
9. –	–

M:\Drawings\2022\202236 Autumn Chase V\202236 LS.dwg 1/12/2024 1:23:30 PM EST

MELLOTT ENGINEERING, INC.
Civil Engineering • Land Planning & Development • Water Resources
7500 Devonshire Heights Road • Hummelstown, PA 17036
mellotteng@comcast.net
717-566-6533

LANDSCAPE PLAN
FOR
AUTUMN CHASE PRD - PHASE V
Land Developer: Hertzler Road Associates, L.P.
UPPER ALLEN TOWNSHIP CUMBERLAND COUNTY PENNSYLVANIA

Project No. 202236
Date February 1, 2023

Sheet No.

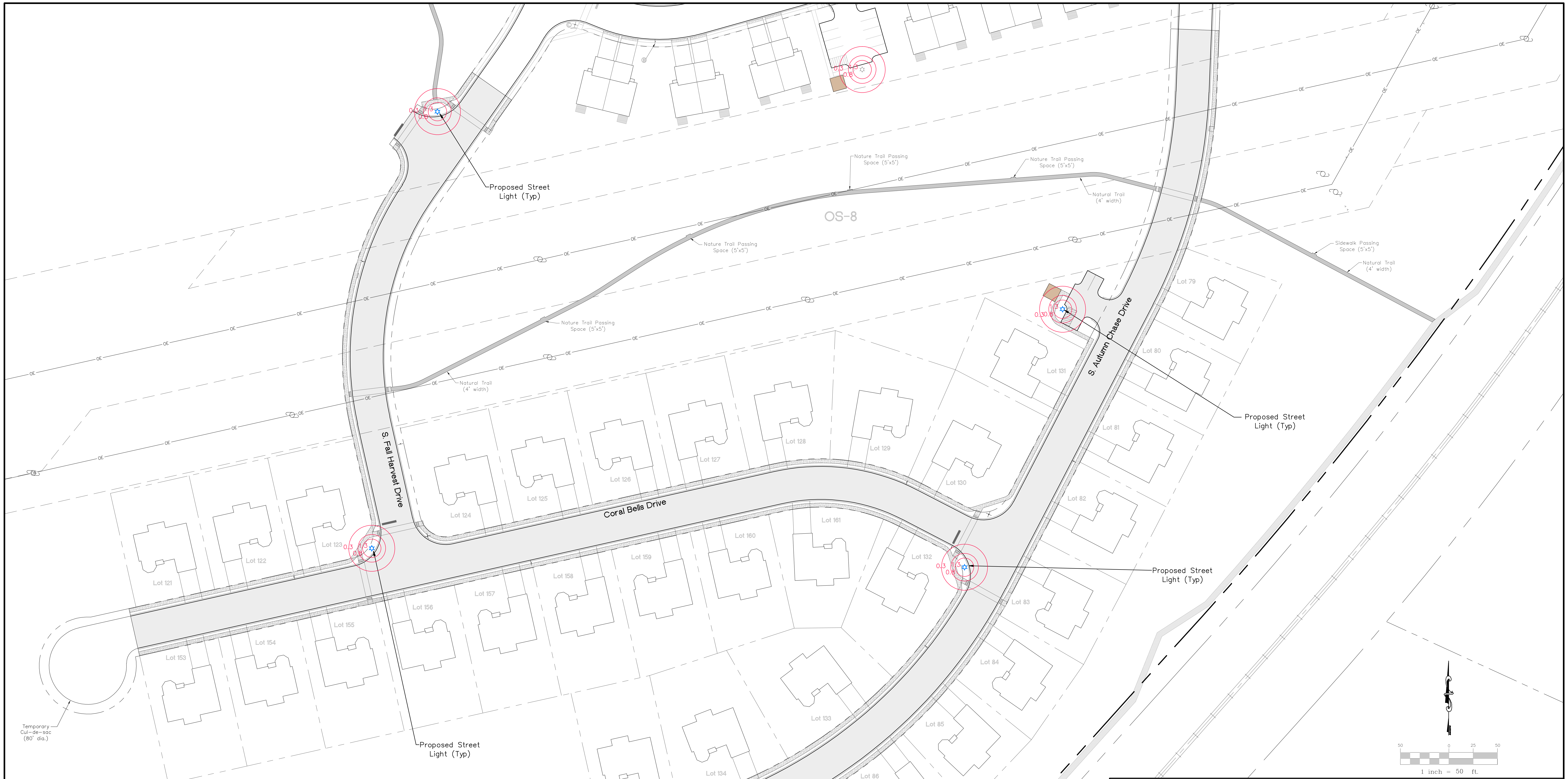
Proposed Street Light (Typ)
Proposed Street Light (Typ)
Proposed Street Light (Typ)
Proposed Street Light (Typ)
OS-8
Nature Trail Passing Space (5'x5')
Nature Trail Passing Space (5'x5')
Nature Trail Passing Space (5'x5')
Nature Trail Passing Space (5'x5')
Natural Trail (4' width)
Natural Trail (4' width)
Natural Trail (4' width)
Sidewalk Passing Space (5'x5')
S. Fall Harvest Drive
Coral Bells Drive
S. Autumn Chase Drive
Temporary Cul-de-sac (80' dia.)
Temporary Cul-de-sac (80' dia.)
Lot 79
Lot 80
Lot 81
Lot 82
Lot 83
Lot 84
Lot 85
Lot 86
Lot 87
Lot 88
Lot 89
Lot 121
Lot 122
Lot 123
Lot 124
Lot 125
Lot 126
Lot 127
Lot 128
Lot 129
Lot 130
Lot 131
Lot 132
Lot 133
Lot 134
Lot 135
Lot 153
Lot 154
Lot 155
Lot 156
Lot 157
Lot 158
Lot 159
Lot 160
Lot 161
50 0 25 50
1 inch = 50 ft.

STREET LIGHT GENERAL NOTES

1. Street lighting is proposed throughout Phase V as shown on this plan. Street lights are proposed at all street intersections and at the comunity mailbox. The proposed street lighting is not intended to over light areas but to alert vehicular traffic of intersections.
2. Street lights shall be standard PPL fixtures and poles as conceptually shown on this plan.

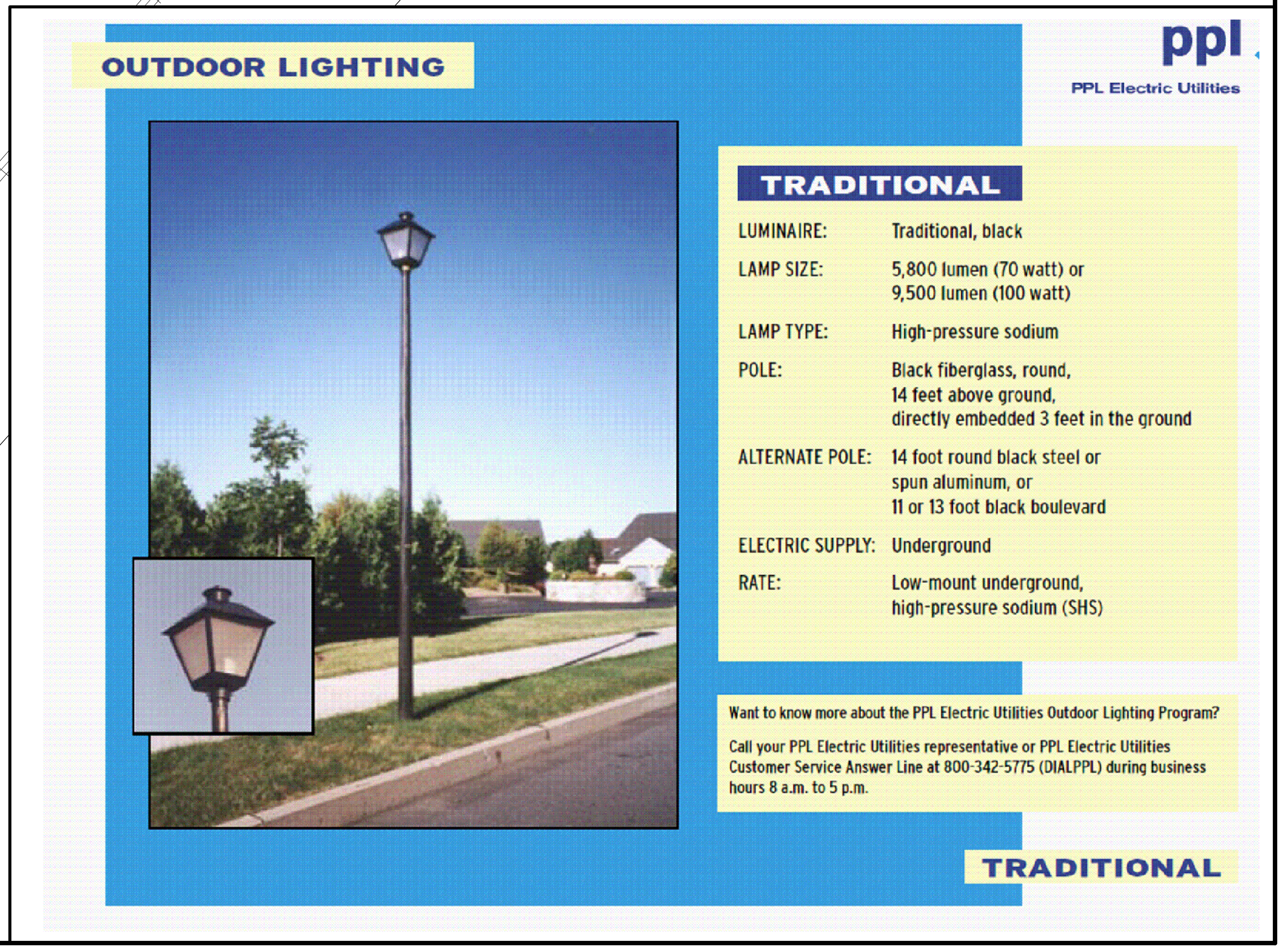

OUTDOOR LIGHTING

ppl

PPL Electric Utilities

TRADITIONAL

LUMINAIRE:	Traditional, black
LAMP SIZE:	5,800 lumen (70 watt) or 9,500 lumen (100 watt)
LAMP TYPE:	High-pressure sodium
POLE:	Black fiberglass, round, 14 feet above ground, directly embedded 3 feet in the ground
ALTERNATE POLE:	14 foot round black steel or spun aluminum, or 11 or 13 foot black boulevard
ELECTRIC SUPPLY:	Underground
RATE:	Low-mount underground, high-pressure sodium (SHS)

Want to know more about the PPL Electric Utilities Outdoor Lighting Program?

Call your PPL Electric Utilities representative or PPL Electric Utilities Customer Service Answer Line at 800-342-5775 (DIALPPL) during business hours 8 a.m. to 5 p.m.

TRADITIONAL

REVISIONS	DATE
1. PPL Utility Pole location updates (PPL replaced existing poles)	2-17-2023
2. Addressing Review Comments	3-7-2023
3.	–
4.	–
5.	–
6.	–
7.	–
8.	–
9.	–

M:\Drawings\2022\202236\202236 Autumn Chase V\202236 LT.dwg 3/7/2023 6:56:45 PM EST

MELLOTT ENGINEERING, INC.
Civil Engineering • Land Planning & Development • Water Resources
7500 Devonshire Heights Road • Hummelstown, PA 17036
mellotteng@comcast.net
717-566-6533

LIGHTING PLAN
FOR
AUTUMN CHASE PRD - PHASE V
Land Developer: Hertzler Road Associates, L.P.
UPPER ALLEN TOWNSHIP CUMBERLAND COUNTY PENNSYLVANIA

Project No. 202236
Date February 1, 2023

Sheet No.
14 of 21

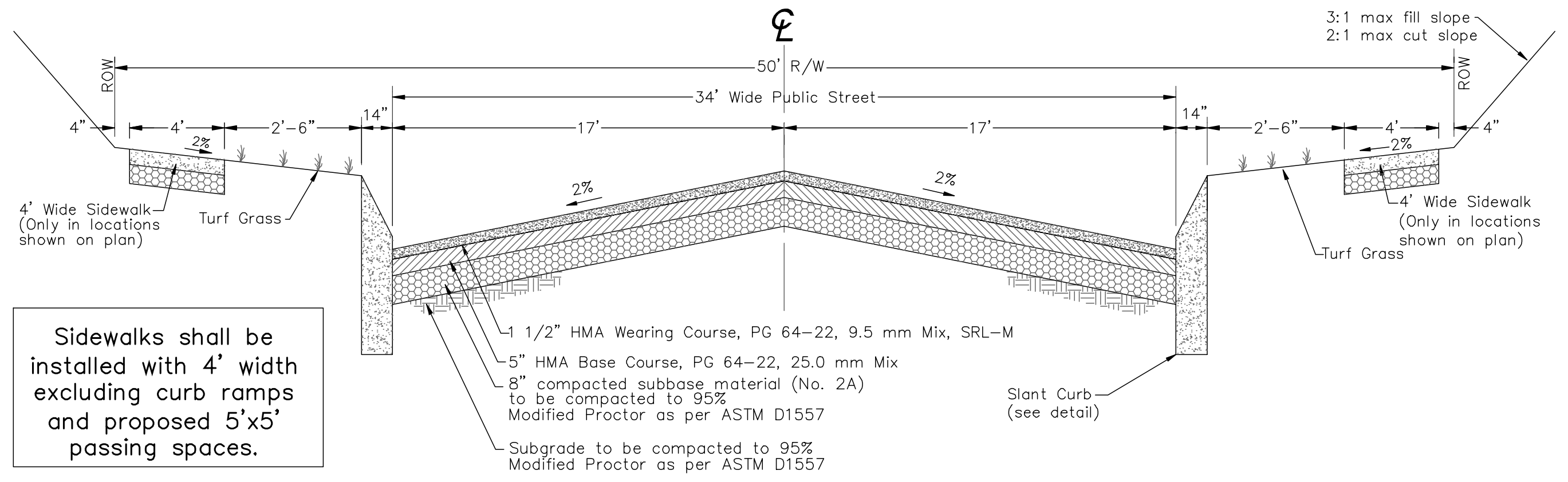
℄
50' R/W
34' Wide Public Street
ROW
ROW
4"
4'
2'-6"
14"
17'
17'
14"
2'-6"
4'
4"
2%
2%
2%
2%
3:1 max fill slope
2:1 max cut slope
4' Wide Sidewalk (Only in locations shown on plan)
Turf Grass
Turf Grass
4' Wide Sidewalk (Only in locations shown on plan)
1 1/2" HMA Wearing Course, PG 64-22, 9.5 mm Mix, SRL-M
5" HMA Base Course, PG 64-22, 25.0 mm Mix
8" compacted subbase material (No. 2A) to be compacted to 95% Modified Proctor as per ASTM D1557
Subgrade to be compacted to 95% Modified Proctor as per ASTM D1557
Slant Curb (see detail)

Sidewalks shall be installed with 4' width excluding curb ramps and proposed 5'x5' passing spaces.

PUBLIC MINOR STREET CROSS SECTION

NTS

NOTES:

1. The above cross sections apply to all proposed streets (see plan view for boulevard entrance locations).
2. All construction methods and materials shall be in conformance with Township and Penn DOT Specifications for Roadway Construction, Pub. 408 (inlucding RC-, TC-, & TS- Standard Drawings).
3. No road construction activity shall be permitted in the Township of Upper Allen until and unless the contractor shall notify the Township at least one week in advance of commencing work. The contractor shall at all times during the progress of work have a competent superintendent or foreman on the job site. Inspection of road work shall be done by the Township or its designee.
4. Roadway subgrade shall be free of sod, vegetative matter, boulders, spongy soil or other unsuitable material. Where poor subsurface drainage conditions exist, adequate drainage facilities shall be installed.
5. The subgrade shall not be prepared during freezing weather or when frozen or when it is unstable due to excessive moisture.
6. All utility lines, under drains, sewer lines, including laterals and service lines, being placed in the roadway shall be installed prior to the commencement of road construction at the following minimum depths:
2. Gravity sewer lines: six feet.
3. Force main sewer: four feet below finish grade.
4. Waterlines: four feet.
5. Gas lines: 2 1/2 feet.
6. Telephone, electrical and television cable: two feet; not to be located within paved cartway.
7. Sewer and water lines shall have a minimum separation distance of 10 feet.
8. PA DEP and private utility regulations and procedures will prevail where applicable.
7. All backfill for utilities under existing roadways shall be 2A stone compacted to within 3% of the optimum material moisture content and placed in not greater than eight-inch lifts. The Township may require flowable fill or other alternate backfill material where conditions may warrant such measures.
8. All backfill for utilities under new roadways shall be suitable backfill material with no stones over four inches and no organic material, compacted to within 3% of the optimum material moisture content and placed in not greater than eight-inch lifts.
9. Preparation of road subgrade.
    (a) The subgrade shall be compacted and fine graded to not more than 0.2 foot below the grade as shown on the plan.
    (b) All soft, plastic (as determined by proof roll) or rock areas in the subgrade shall be undercut to a depth of at least 12 inches or more if deemed necessary by the Township Engineer and shall be refilled with approved materials and/or underdrained and/or reinforced with geotextile, as determined by the Township Engineer.
    (c) The subgrade shall conform to the same crown as the paved surface.
    (d) Prior to the placement of subbase or base course, the subgrade shall be proof-rolled with a fully loaded tandem axle dump truck. The proof rolling shall be observed by the Township Engineer. An acceptable proof roll shall be non-movement of the subgrade.
10. Preparation of road base.
    (a) The base course material shall consist of compacted PennDOT No. 2A subbase meeting the specifications of Pennsylvania Department of Transportation Publication 408, as amended, and shall be laid in the manner prescribed therein to the following thickness: 8" eight inches.
    (b) Pipe underdrain shall be provided in wet areas, in areas of roadway sag conditions, or any other areas as required by the Township Engineer.
11. Preparation of road surface. Roads shall be constructed from multiple courses of pavement materials, including a base course and a wearing course of hot-mixed, hot-laid asphaltic concrete. An additional binder course may be required on collector roads and industrial or commercial areas.
    (a) The base course shall consist of a minimum of five inches of compacted HMA Superpave base, P664-22, 37.5 mm mix, meeting the specifications of the Pennsylvania Department of Transportation Publication 408, as amended, and shall be laid in the manner prescribed therein. The base course shall be repaired if defects occurred prior to placement of wearing course. Where cracking or any other type of failure has occurred in the base course, the contractor shall completely remove the base course, stabilize the subgrade if necessary and construct new base course. Where the deficiency involves depressions or raveling in the surface of the base course, the repair may be made by skin patching with a suitable bituminous material.
    (b) The wearing course shall consist of a minimum of 1 1/2 inches of compacted HMA Superpave wearing course, P664-22, 9.5 mm mix, meeting the requirements of the Pennsylvania Department of Transportation Publication 408, as amended, and shall be laid in the manner prescribed therein. Where a wearing course is placed on an existing street, a minimum one-half-inch scratch course of compacted HMA Superpave wearing course, P664-22, 9.5 mm mix, shall be placed prior to the wearing course. The Township Engineer may require that the existing pavement be milled prior to placement of the scratch course.
    (c) The wearing course shall only be placed after sufficient time has passed to ensure that no further settling will take place. The wearing course shall only be placed after an inspection has determined no sags, low spots or depressions exist which could adversely affect the integrity of the wearing course. Any defects found shall be repaired prior to the placement of the wearing course. In the event of any deficiency in the wearing course such as raveling, depressions, cracking etc., such deficiencies shall be repaired by removing the wearing course and replacing with new material. Subject to said inspection, the wearing course shall be placed no later than the time when 90% of the lots have been issued a certificate of occupancy by the Township. A tack coat meeting the requirements of the Pennsylvania Department of Transportation Publication 408, as amended, shall be placed prior to paving with the wearing course.
    (d) Where required, the binder course shall consist of a minimum of 2.5 inches of HMA Superpave binder course, P664-22, 19.0 mm mix, meeting the requirements of the Pennsylvania Department of Transportation Publication 408, as amended, and shall be laid in the manner prescribed therein.

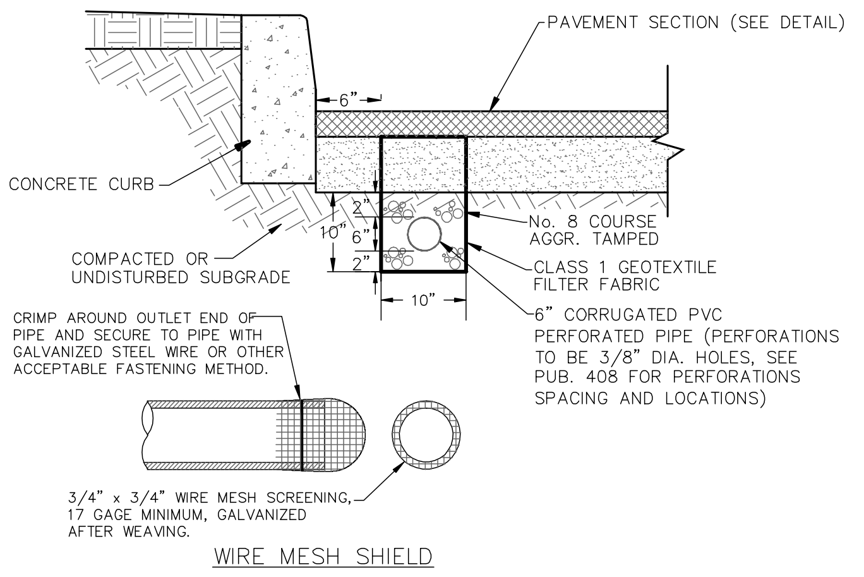
PAVEMENT SECTION (SEE DETAIL)
6"
CONCRETE CURB
2"
10"
6"
2"
10"
No. 8 COURSE AGGR. TAMPED
CLASS 1 GEOTEXTILE FILTER FABRIC
6" CORRUGATED PVC PERFORATED PIPE (PERFORATIONS TO BE 3/8" DIA. HOLES, SEE PUB. 408 FOR PERFORATIONS SPACING AND LOCATIONS)
COMPACTED OR UNDISTURBED SUBGRADE
CRIMP AROUND OUTLET END OF PIPE AND SECURE TO PIPE WITH GALVANIZED STEEL WIRE OR OTHER ACCEPTABLE FASTENING METHOD.
3/4" x 3/4" WIRE MESH SCREENING, 17 GAGE MINIMUM, GALVANIZED AFTER WEAVING.
WIRE MESH SHIELD

Note:

1. Install underdrains where shown on the plan, where field conditions warrant, 50 feet in either direction of an inlet located in a sag vertical curve and as directed in the field by the Township.
2. The road subgrade and stone subbase are to be established prior to the placement of the underdrain.

PAVEMENT UNDERDRAIN DETAIL

NTS

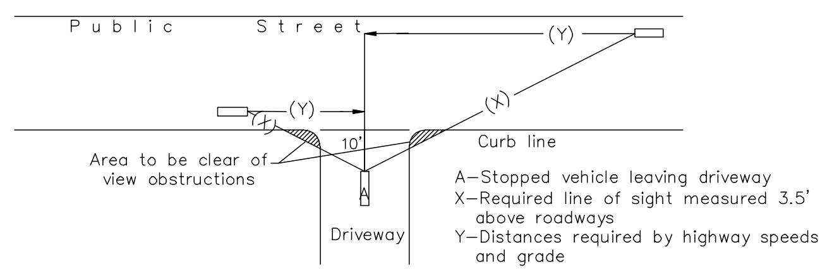
Public Street
(Y)
(Y)
(X)
(X)
10'
Curb line
Area to be clear of view obstructions
A
Driveway
A-Stopped vehicle leaving driveway
X-Required line of sight measured 3.5' above roadways
Y-Distances required by highway speeds and grade

Clear-sight triangle requirements at driveways:

1. No building or obstruction shall be permitted in this area that would obscure the vision of a motorist.
2. Grading and / or plantings (existing through mature growth) less than three (3) feet above the street grade are permitted in the clear-sight triangle.

DRIVEWAY CLEAR SIGHT TRIANGLE DETAIL

N.T.S.

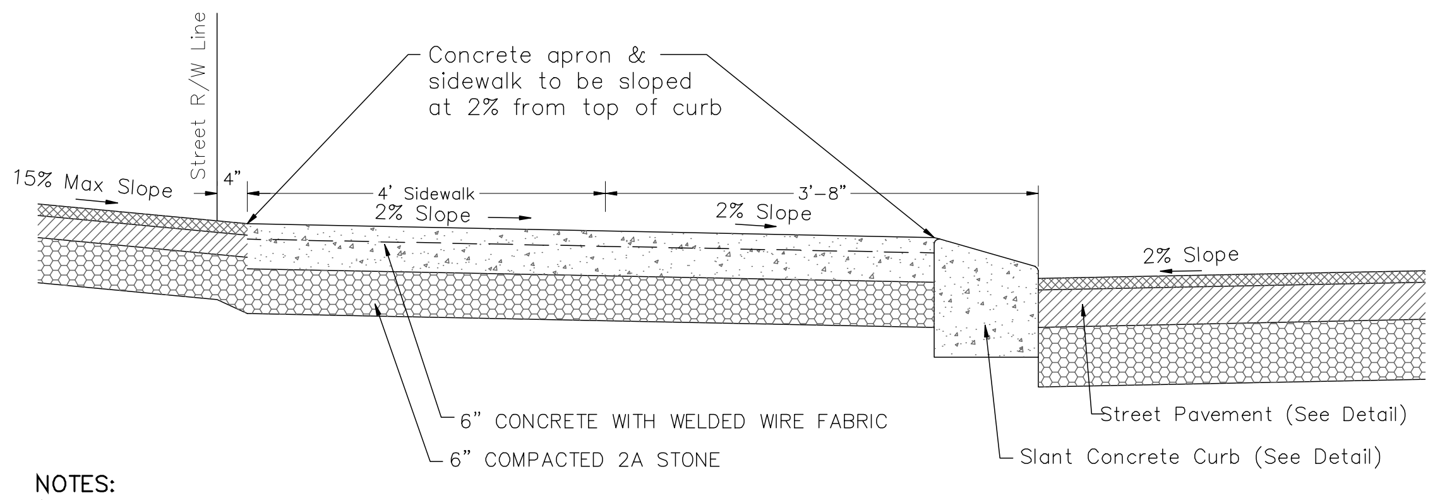
Street R/W Line
Concrete apron & sidewalk to be sloped at 2% from top of curb
15% Max Slope
4"
4' Sidewalk
3'-8"
2% Slope
2% Slope
2% Slope
6" CONCRETE WITH WELDED WIRE FABRIC
6" COMPACTED 2A STONE
Street Pavement (See Detail)
Slant Concrete Curb (See Detail)

NOTES:

1. Driveways shall be constructed in accordance with Township Subdivision and Land Development Ordinance Section 220-17, Zoning Ordinance Section 245-259.B. and Sections 02500 & 02525 of Construction and Materials Specifications manual requriements.
2. Sidewalks to be constructed in accordance with PA DOT Pub. 408. All concrete sidewalks shall have a minimum thickness of 4", except at driveways, where the sidewalks shall have a minimum thickness of 6" and shall be reinforced with WWF 6x6 - W2.9 x W2.9(6 ga.) wire meach placed 2" from top of surface.
3. Driveways shall be constructed with a concrete apron from the depressed curb to the proposed sidewalk. Driveway shall be bituminous pavement or concrete from the sidewalk to the unit/dwelling.

DRIVEWAY APRON DETAIL

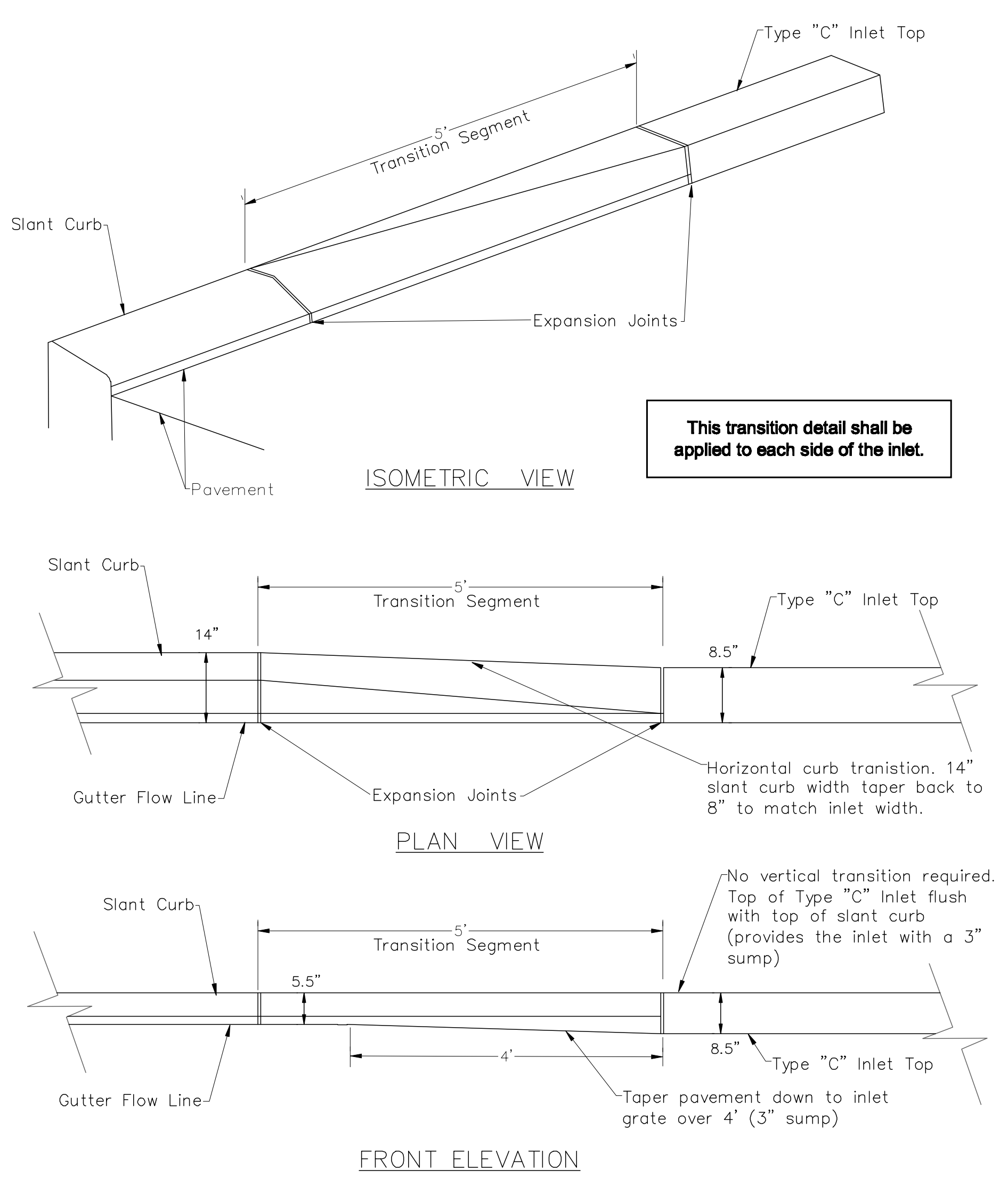
Type "C" Inlet Top
5'
Transition Segment
Slant Curb
Expansion Joints
Pavement
ISOMETRIC VIEW
Slant Curb
5'
Transition Segment
Type "C" Inlet Top
14"
8.5"
Gutter Flow Line
Expansion Joints
Horizontal curb tranistion. 14" slant curb width taper back to 8" to match inlet width.
PLAN VIEW
Slant Curb
5'
Transition Segment
No vertical transition required. Top of Type "C" Inlet flush with top of slant curb (provides the inlet with a 3" sump)
5.5"
4'
8.5"
Type "C" Inlet Top
Gutter Flow Line
Taper pavement down to inlet grate over 4' (3" sump)
FRONT ELEVATION

This transition detail shall be applied to each side of the inlet.

Slant curb shall be installed for all proposed streets. Standard Type "C" Stormwater Inlets with an 8" hood (See Detail) shall be installed for all curbside street drainage collection. Use the above detail for the necessary curb transition to stormwater inlet boxs. The top of the curb and inlet hood shall be flush and will not require a vertical transition (provides a 3" sump at inlet, see pavement slope tranistion above for pavement transition to sumped inlet).

VERTICAL TO SLANT CURB TRANSITION DETAIL

NTS

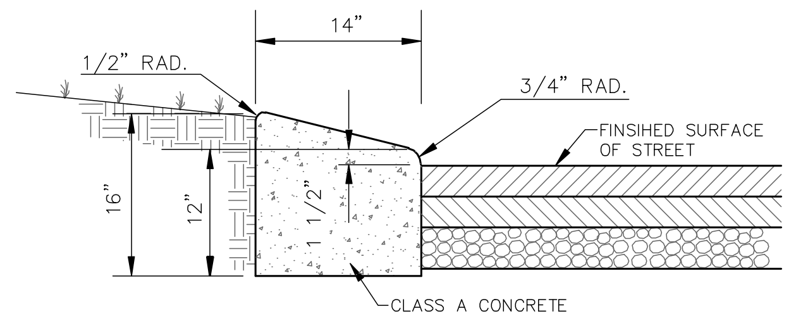
14"
1/2" RAD.
3/4" RAD.
FINSIHED SURFACE OF STREET
16"
12"
1 1/2"
CLASS A CONCRETE

SLANT CURB DETAIL

NTS

Sidewalks shall be installed with 4' width excluding curb ramps and the proposed 5'x5' passing spaces.

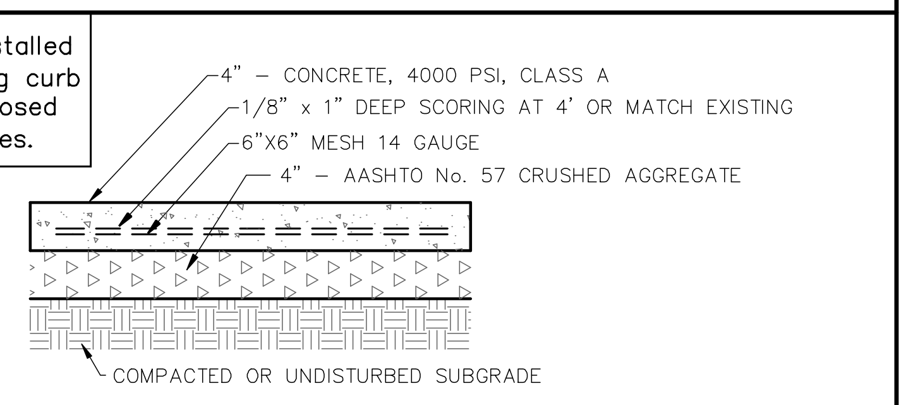
4" - CONCRETE, 4000 PSI, CLASS A
1/8" x 1" DEEP SCORING AT 4' OR MATCH EXISTING
6"X6" MESH 14 GAUGE
4" - AASHTO No. 57 CRUSHED AGGREGATE
COMPACTED OR UNDISTURBED SUBGRADE

NOTES:

1. Sidewalks to be constructed in accordance with PA DOT Pub. 408.
2. Slabs to be poured in separate 30' lengths and shall be completely separated by $\frac{1}{4}$" expansion joints.
3. Surface to be provided with broom finish.

CONCRETE SIDEWALK DETAIL

NTS

Curb ramps shall be installed where sidewalk meets with a street/curbline. Curb Ramps shall be installed in accordance with current Commonwealth of Pennsylvania Department of Transportation Standards for Roadway Construction Publication 72M requirements. The curb ramps shall be installed in accordance with RC-67M Alternative Type 4A Curb Ramp (Perpendicluiar) dated February 19, 2021. Painted Crosswalks shall be installed at each ramp/road crossing in accordance with Publication 111 TC-8600 requirements (6' crosswalk width centered on crossing, 6" white lines). Stop sign and stop bar shall be installed 4' away from the crosswalks where applicable.

CURB RAMP-CROOSWALK REQUIREMENTS

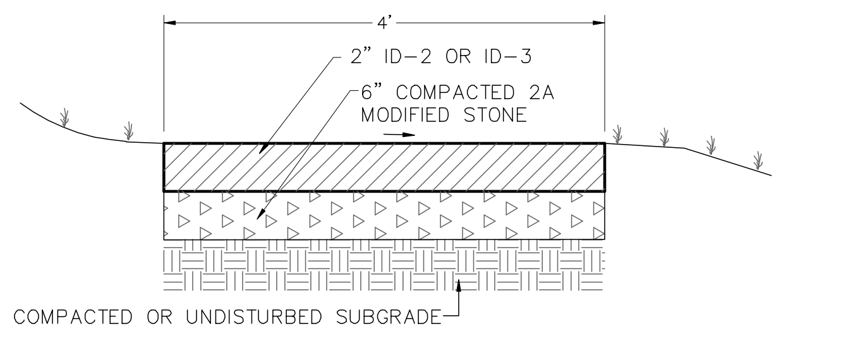
4'
2" ID-2 OR ID-3
6" COMPACTED 2A MODIFIED STONE
COMPACTED OR UNDISTURBED SUBGRADE

Notes:

This detail is associated with the aspahlt path proposed with this Phase V Plan. The nature trail between S. Fall Harvest Drive and S, Autumn Chase Drive shall be constructed to ADA requirements. Trail longitudinal slope shall not exceed 5%, cross slope shall not exceed 2% and shall slope to the north and 5'x5' passing spaces shall be installed as shown or at locations not to exceed 200' spacing. Trail access points to the roads shall be ADA compliant via installation truncated dome strip and 5'x5' landing area (<2% all directions).

APHALT NATURE TRAIL DETAIL

NTS

	REVISIONS	DATE
1.	PPL Utility Pole location updates (PPL replaced existing poles)	2-17-2023
2.	Addressing Review Comments	3-7-2023
3.	-	-
4.	-	-
5.	-	-
6.	-	-
7.	-	-
8.	-	-
9.	-	-

MELLOTT ENGINEERING, INC.
Civil Engineering • Land Planning & Development • Water Resources
7500 Devonshire Heights Road • Hummelstown, PA 17036
mellotteng@comcast.net
717-566-6533

CONSTRUCTION DETAILS

FOR

AUTUMN CHASE PRD - PHASE V

Land Developer: Hertzler Road Associates, L.P.

UPPER ALLEN TOWNSHIP CUMBERLAND COUNTY PENNSYLVANIA

Project No. 202236
Date February 1, 2023

Sheet No.

15 of 21

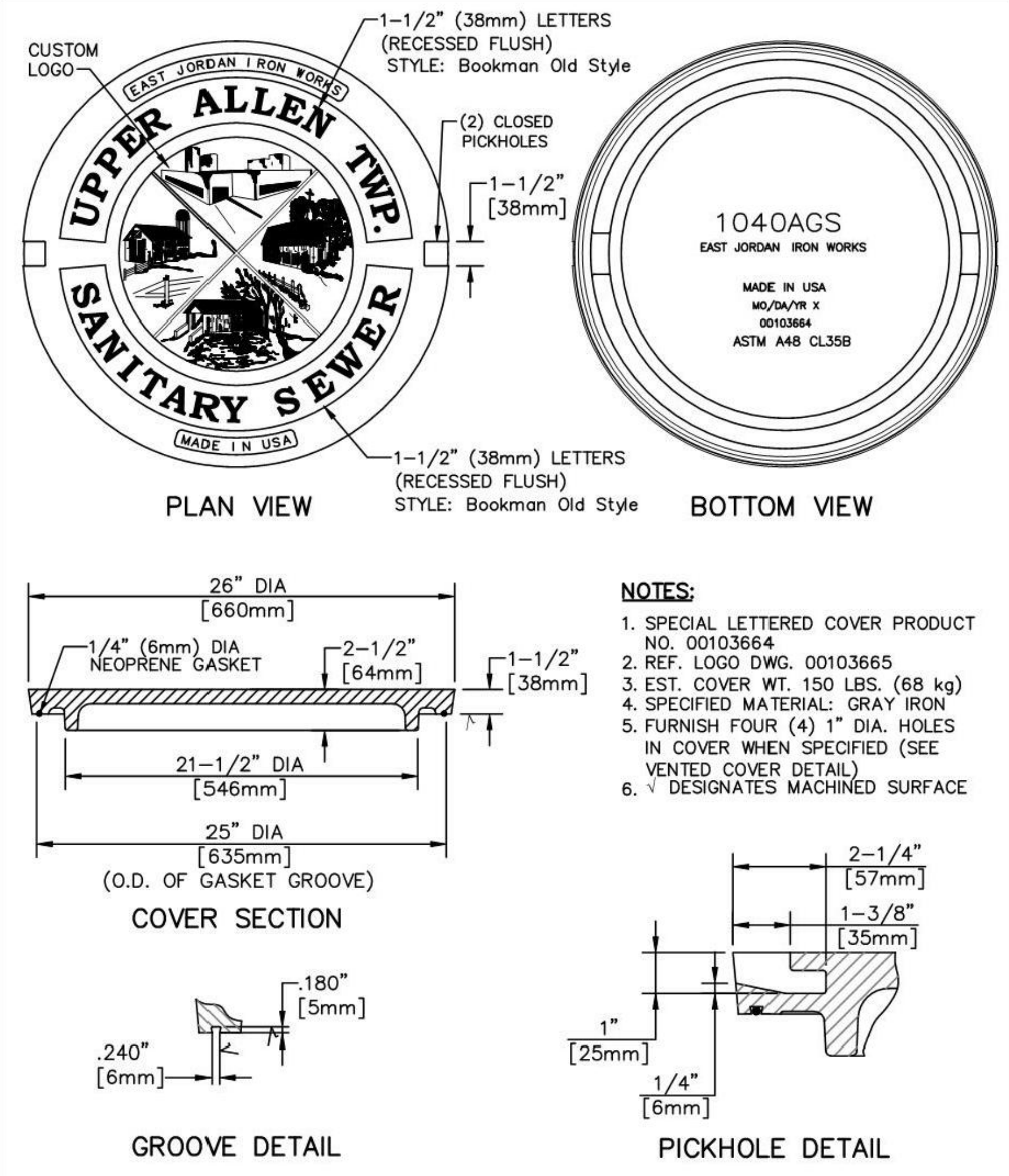
CUSTOM LOGO
1-1/2" (38mm) LETTERS (RECESSED FLUSH) STYLE: Bookman Old Style
EAST JORDAN IRON WORKS
UPPER ALLEN TWP.
SANITARY SEWER
MADE IN USA
(2) CLOSED PICKHOLES
1-1/2" [38mm]
1-1/2" (38mm) LETTERS (RECESSED FLUSH) STYLE: Bookman Old Style
PLAN VIEW
1040AGS
EAST JORDAN IRON WORKS
MADE IN USA
MO/DA/YR X
00103664
ASTM A48 CL35B
BOTTOM VIEW
26" DIA [660mm]
1/4" (6mm) DIA NEOPRENE GASKET
2-1/2" [64mm]
1-1/2" [38mm]
21-1/2" DIA [546mm]
25" DIA [635mm] (O.D. OF GASKET GROOVE)
COVER SECTION
.180" [5mm]
.240" [6mm]
GROOVE DETAIL
2-1/4" [57mm]
1-3/8" [35mm]
1" [25mm]
1/4" [6mm]
PICKHOLE DETAIL

NOTES:

1. SPECIAL LETTERED COVER PRODUCT NO. 00103664
2. REF. LOGO DWG. 00103665
3. EST. COVER WT. 150 LBS. (68 kg)
4. SPECIFIED MATERIAL: GRAY IRON
5. FURNISH FOUR (4) 1" DIA. HOLES IN COVER WHEN SPECIFIED (SEE VENTED COVER DETAIL)
6. √ DESIGNATES MACHINED SURFACE

FILE NAME: MH-1 – MH COVER SELF-SEALING.DWG

STANDARD DETAILS
HEAVY DUTY MANHOLE
SELF-SEALING COVER
UPPER ALLEN TOWNSHIP

DATE	REVISIONS
3/08	DWG. CREATED
12/14	DWG. UPDATED
5/22	DWG. UPDATED

SCALE: NO SCALE
DWG. NO.: MH-1

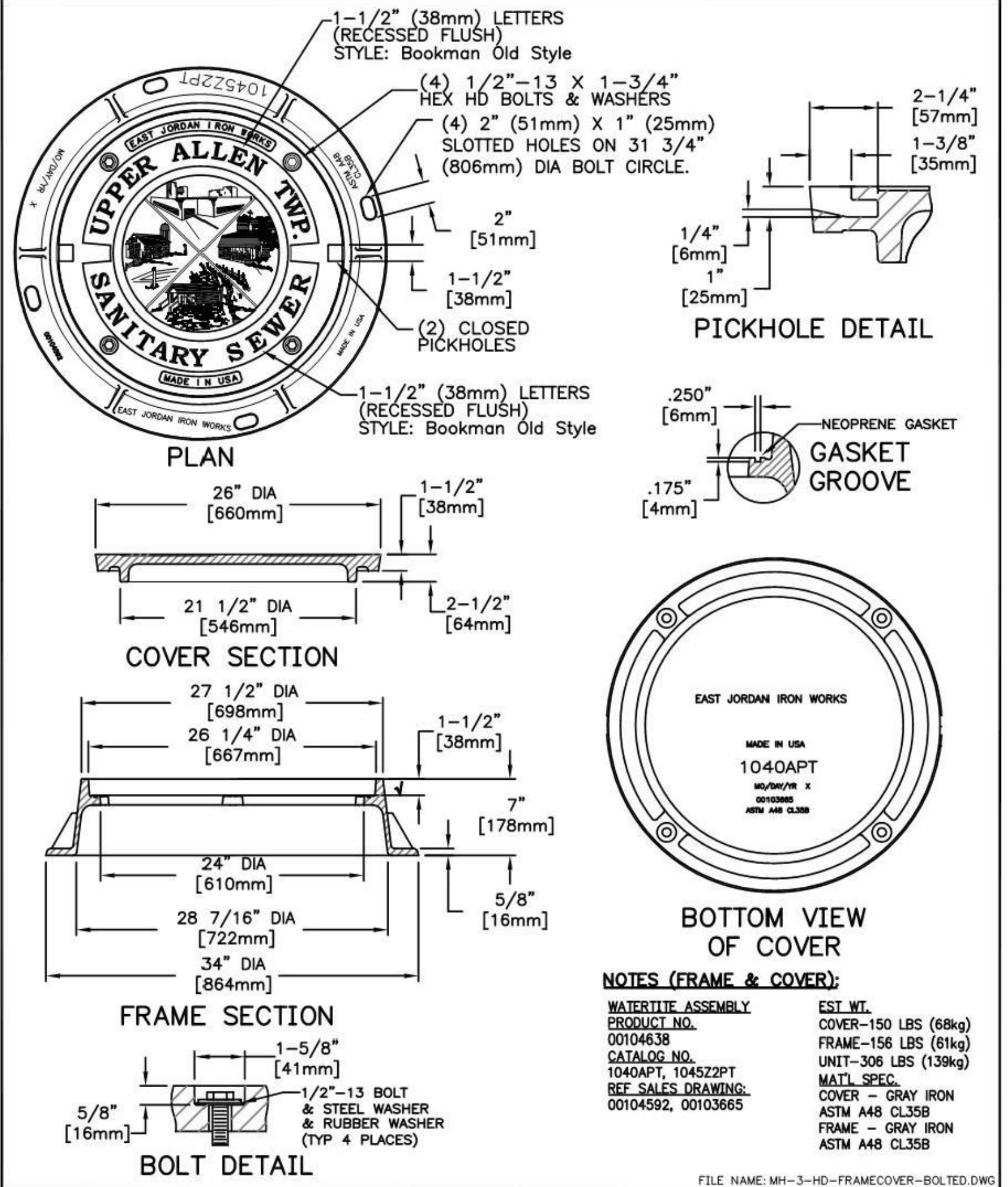
1-1/2" (38mm) LETTERS (RECESSED FLUSH) STYLE: Bookman Old Style
(4) 1/2"-13 X 1-3/4" HEX HD BOLTS & WASHERS
(4) 2" (51mm) X 1" (25mm) SLOTTED HOLES ON 31 3/4" (806mm) DIA BOLT CIRCLE.
1045Z2PT
EAST JORDAN IRON WORKS
UPPER ALLEN TWP.
SANITARY SEWER
MADE IN USA
MO/DAY/YR X
ASTM A48 CL35B
2" [51mm]
1-1/2" [38mm]
(2) CLOSED PICKHOLES
1-1/2" (38mm) LETTERS (RECESSED FLUSH) STYLE: Bookman Old Style
PLAN
2-1/4" [57mm]
1-3/8" [35mm]
1/4" [6mm]
1" [25mm]
PICKHOLE DETAIL
.250" [6mm]
NEOPRENE GASKET
.175" [4mm]
GASKET GROOVE
26" DIA [660mm]
1-1/2" [38mm]
21 1/2" DIA [546mm]
2-1/2" [64mm]
COVER SECTION
27 1/2" DIA [698mm]
26 1/4" DIA [667mm]
1-1/2" [38mm]
7" [178mm]
24" DIA [610mm]
5/8" [16mm]
28 7/16" DIA [722mm]
34" DIA [864mm]
FRAME SECTION
EAST JORDAN IRON WORKS
MADE IN USA
1040APT
MO/DAY/YR X
00103665
ASTM A48 CL35B
BOTTOM VIEW OF COVER
1-5/8" [41mm]
1/2"-13 BOLT & STEEL WASHER & RUBBER WASHER (TYP 4 PLACES)
5/8" [16mm]
BOLT DETAIL

NOTES (FRAME & COVER):

WATERTITE ASSEMBLY PRODUCT NO.
00104638
CATALOG NO.
1040APT, 1045Z2PT
REF SALES DRAWING:
00104592, 00103665

EST WT.
COVER–150 LBS (68kg)
FRAME–156 LBS (61kg)
UNIT–306 LBS (139kg)
MAT'L SPEC.
COVER – GRAY IRON
ASTM A48 CL35B
FRAME – GRAY IRON
ASTM A48 CL35B

FILE NAME: MH-3-HD-FRAMECOVER-BOLTED.DWG

STANDARD DETAILS
HEAVY DUTY MANHOLE WATERTIGHT
FRAME AND COVER
UPPER ALLEN TOWNSHIP

DATE	REVISIONS
3/08	DWG. CREATED

SCALE: NO SCALE
DWG. NO.: MH-3

NOTES:

1. BOLTING OF MANHOLE FRAME AND COVER REQUIRED FOR ALL MANHOLES.
2. 3/4" DIA. STAINLESS STEEL EXPANSION ANCHOR BOLTS MAY BE USED IN PLACE OF THREADED STUDS AND INSERTS.
3. MANHOLE THREADED INSERT SPACING TO MATCH HOLE CENTER SPACING ON SPECIFIED FRAME AND COVER FOR EACH MANHOLE.
4. MANHOLE FRAMES SHALL BE SET WITH DOUBLE APPLICATION OF PREFORMED PLASTIC GASKET SEALANT MATERIAL.
5. PIPES SHALL PROTRUDE MIN. 2" INSIDE MANHOLE WALL.
6. ANNULAR SPACE AROUND PIPES TO BE FILLED WITH NON-SHRINK CEMENT GROUT FLUSH WITH MANHOLE WALL.
7. FOR LENGTH OF PIPE CONNECTIONS TO MANHOLES, REFERENCE SPECIFICATION SECTION 02601.
8. REFERENCE SPECIFICATION SECTION 02601 FOR ANTI-FLOATATION REQUIREMENTS.
9. ALL STONE GRADATIONS ARE AASHTO CLASSIFICATION.

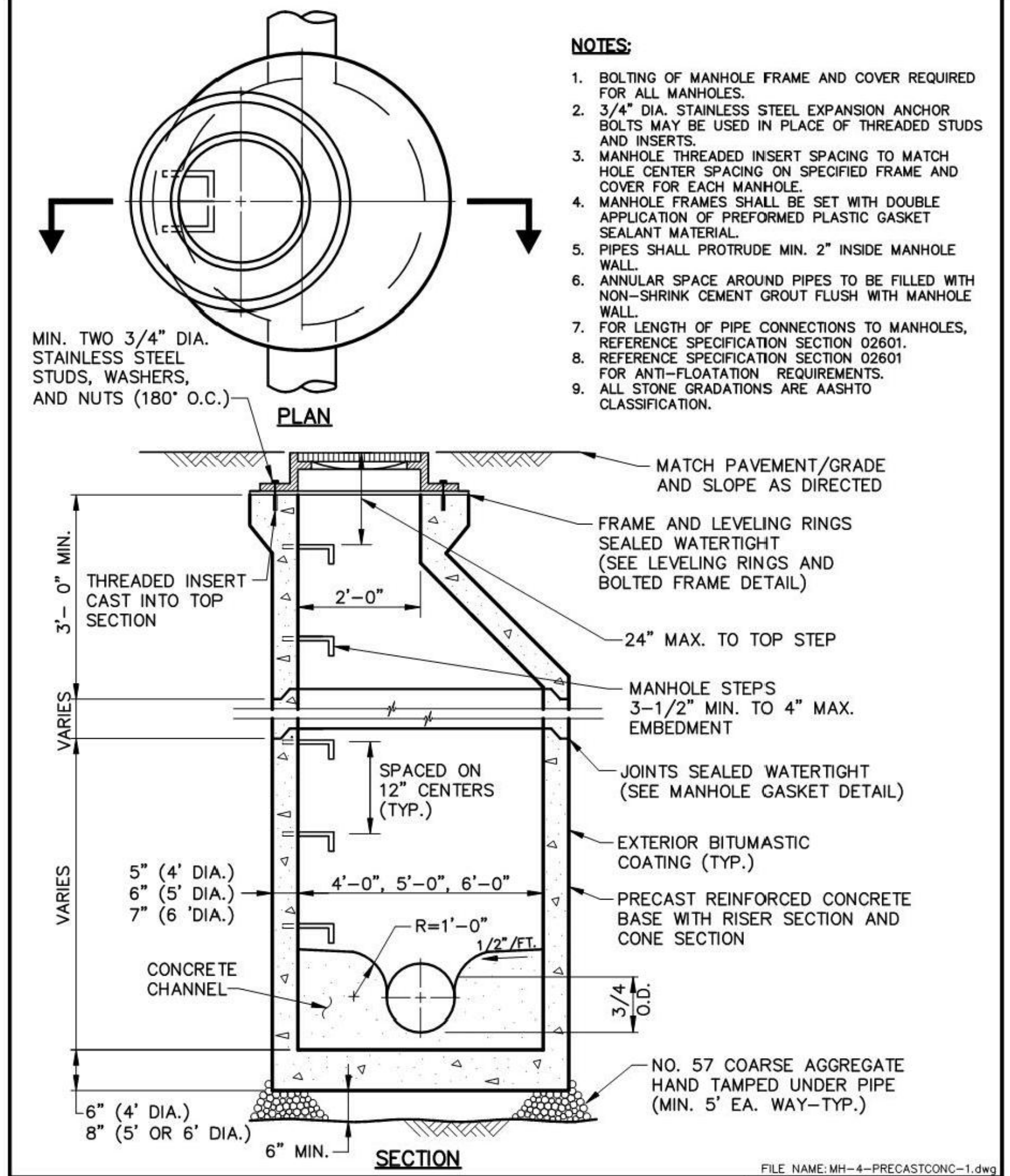
MIN. TWO 3/4" DIA. STAINLESS STEEL STUDS, WASHERS, AND NUTS (180° O.C.)
PLAN
MATCH PAVEMENT/GRADE AND SLOPE AS DIRECTED
FRAME AND LEVELING RINGS SEALED WATERTIGHT (SEE LEVELING RINGS AND BOLTED FRAME DETAIL)
3'- 0" MIN.
THREADED INSERT CAST INTO TOP SECTION
2'-0"
24" MAX. TO TOP STEP
MANHOLE STEPS 3-1/2" MIN. TO 4" MAX. EMBEDMENT
VARIES
SPACED ON 12" CENTERS (TYP.)
JOINTS SEALED WATERTIGHT (SEE MANHOLE GASKET DETAIL)
EXTERIOR BITUMASTIC COATING (TYP.)
VARIES
5" (4' DIA.)
6" (5' DIA.)
7" (6 'DIA.)
4'-0", 5'-0", 6'-0"
PRECAST REINFORCED CONCRETE BASE WITH RISER SECTION AND CONE SECTION
R=1'-0"
1/2"/FT.
CONCRETE CHANNEL
3/4 O.D.
NO. 57 COARSE AGGREGATE HAND TAMPED UNDER PIPE (MIN. 5' EA. WAY–TYP.)
6" (4' DIA.)
8" (5' OR 6' DIA.)
6" MIN.
SECTION

FILE NAME: MH-4-PRECASTCONC-1.dwg

STANDARD DETAILS
STANDARD PRECAST CONCRETE MANHOLE
WITH PRECAST CONCRETE BASE
UPPER ALLEN TOWNSHIP

DATE	REVISIONS
3/08	DWG. CREATED
12/13	DWG. UPDATED
12/16	NOTE REVISIONS

SCALE: NO SCALE
DWG. NO.: MH-4

NOTES:

1. BOLTING OF MANHOLE FRAME AND COVER REQUIRED FOR ALL MANHOLES.
2. 3/4" DIA. STAINLESS STEEL EXPANSION ANCHOR BOLTS MAY BE USED IN PLACE OF THREADED STUDS AND INSERTS.
3. MANHOLE THREADED INSERT SPACING TO MATCH HOLE CENTER SPACING ON SPECIFIED FRAME AND COVER FOR EACH MANHOLE.
4. MANHOLE FRAMES SHALL BE SET WITH DOUBLE APPLICATION OF PREFORMED PLASTIC GASKET SEALANT MATERIAL.
5. PIPES SHALL PROTRUDE MIN. 2" INSIDE MANHOLE WALL.
6. ANNULAR SPACE AROUND PIPES TO BE FILLED WITH NON-SHRINK CEMENT GROUT FLUSH WITH MANHOLE WALL.
7. FOR LENGTH OF PIPE CONNECTIONS TO MANHOLES, REFERENCE SPECIFICATION SECTION 02601.
8. REFERENCE SPECIFICATION SECTION 02601 FOR ANTI-FLOATATION REQUIREMENTS.
9. ALL STONE GRADATIONS ARE AASHTO CLASSIFICATION.

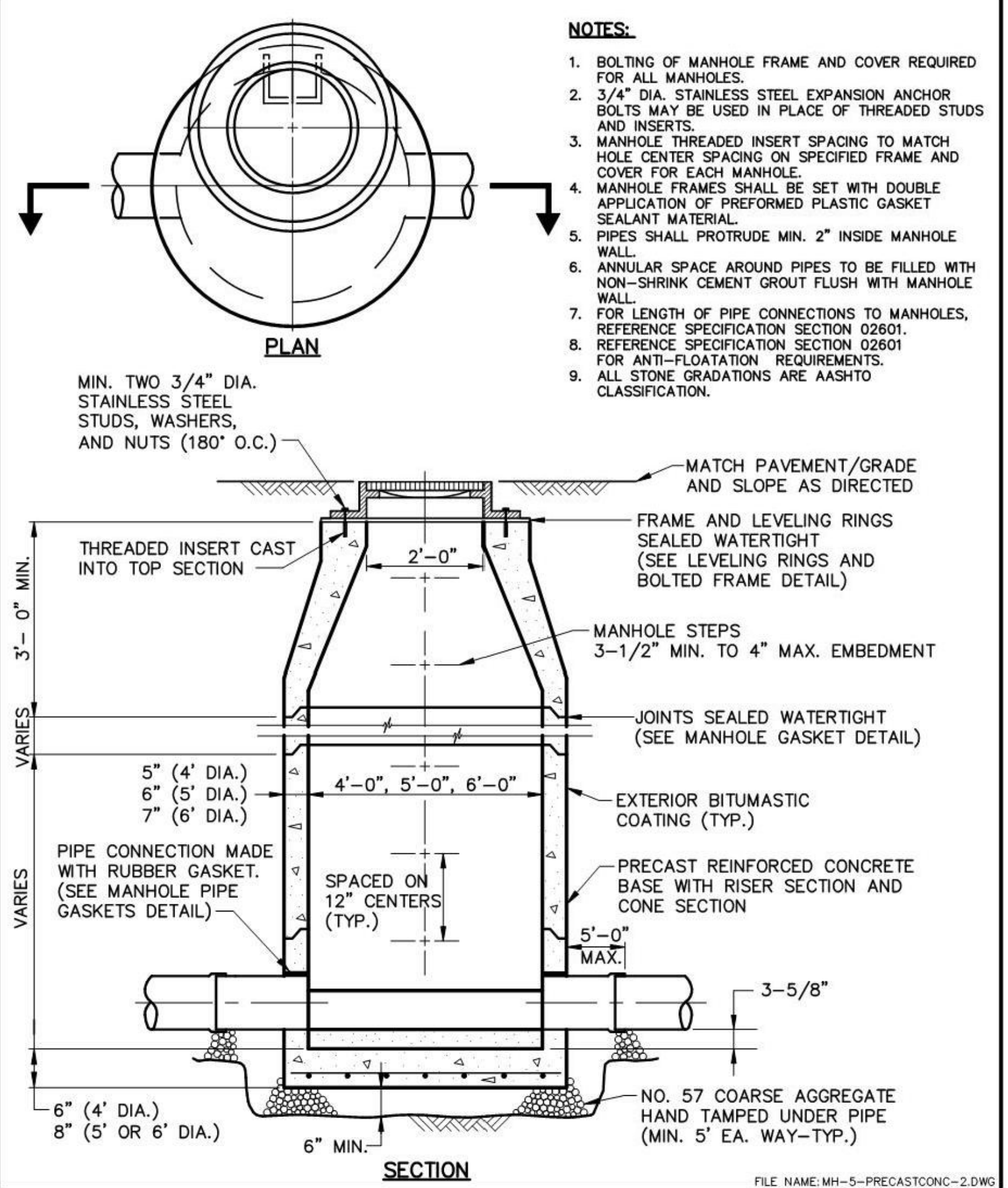
PLAN
MIN. TWO 3/4" DIA. STAINLESS STEEL STUDS, WASHERS, AND NUTS (180° O.C.)
MATCH PAVEMENT/GRADE AND SLOPE AS DIRECTED
THREADED INSERT CAST INTO TOP SECTION
2'-0"
FRAME AND LEVELING RINGS SEALED WATERTIGHT (SEE LEVELING RINGS AND BOLTED FRAME DETAIL)
3'- 0" MIN.
MANHOLE STEPS 3-1/2" MIN. TO 4" MAX. EMBEDMENT
VARIES
JOINTS SEALED WATERTIGHT (SEE MANHOLE GASKET DETAIL)
5" (4' DIA.)
6" (5' DIA.)
7" (6' DIA.)
4'-0", 5'-0", 6'-0"
EXTERIOR BITUMASTIC COATING (TYP.)
VARIES
PIPE CONNECTION MADE WITH RUBBER GASKET. (SEE MANHOLE PIPE GASKETS DETAIL)
SPACED ON 12" CENTERS (TYP.)
PRECAST REINFORCED CONCRETE BASE WITH RISER SECTION AND CONE SECTION
5'-0" MAX.
3-5/8"
6" (4' DIA.)
8" (5' OR 6' DIA.)
6" MIN.
NO. 57 COARSE AGGREGATE HAND TAMPED UNDER PIPE (MIN. 5' EA. WAY–TYP.)
SECTION

FILE NAME: MH-5-PRECASTCONC-2.DWG

STANDARD DETAILS
STANDARD PRECAST CONCRETE MANHOLE
WITH PRECAST CONCRETE BASE
UPPER ALLEN TOWNSHIP

DATE	REVISIONS
3/08	DWG. CREATED
12/13	DWG. UPDATED
12/16	NOTE REVISIONS

SCALE: NO SCALE
DWG. NO.: MH-5

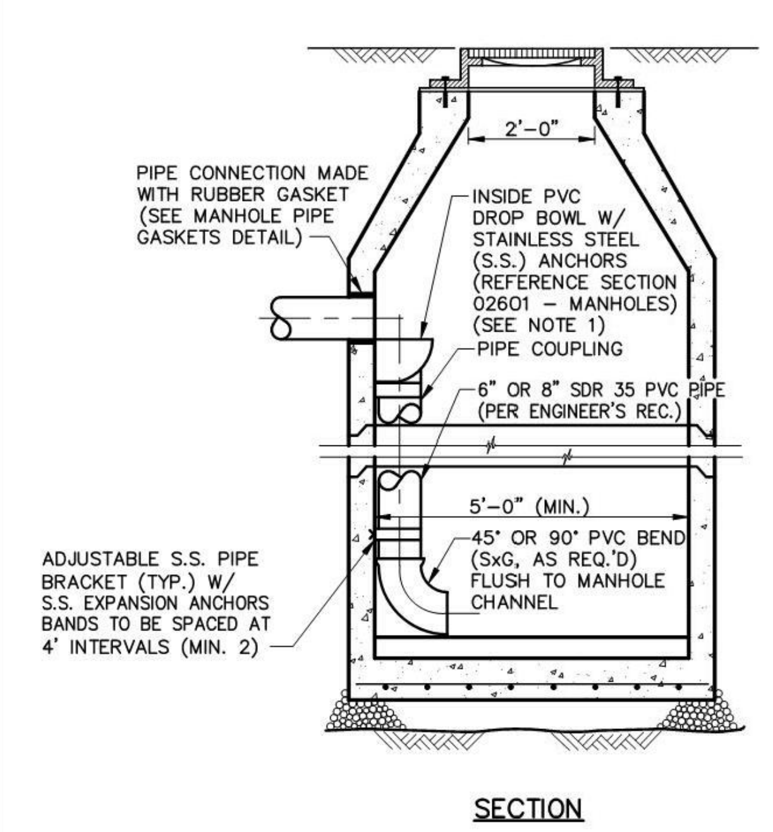
2'-0"
PIPE CONNECTION MADE WITH RUBBER GASKET (SEE MANHOLE PIPE GASKETS DETAIL)
INSIDE PVC DROP BOWL W/ STAINLESS STEEL (S.S.) ANCHORS (REFERENCE SECTION 02601 – MANHOLES) (SEE NOTE 1)
PIPE COUPLING
6" OR 8" SDR 35 PVC PIPE (PER ENGINEER'S REC.)
5'-0" (MIN.)
45° OR 90° PVC BEND (SxG, AS REQ.'D) FLUSH TO MANHOLE CHANNEL
ADJUSTABLE S.S. PIPE BRACKET (TYP.) W/ S.S. EXPANSION ANCHORS BANDS TO BE SPACED AT 4' INTERVALS (MIN. 2)
SECTION

NOTES:

1. PVC DROP BOWL SHALL BE AS MANUFACTURED BY RELINER/DURAN, INC. OR APPROVED EQUAL.
2. REFERENCE PRECAST CONCRETE MANHOLE AND MANHOLE COVER AND CASTING DETAILS.

FILE NAME: MH-7-PRECASTCONC-INSIDEDROP.DWG

STANDARD DETAILS
INSIDE MANHOLE DROP CONNECTION
UPPER ALLEN TOWNSHIP

DATE	REVISIONS
3/08	DWG. CREATED
12/13	DWG. UPDATED
12/16	NOTE/DWG. REVISION

SCALE: NO SCALE
DWG. NO.: MH-7

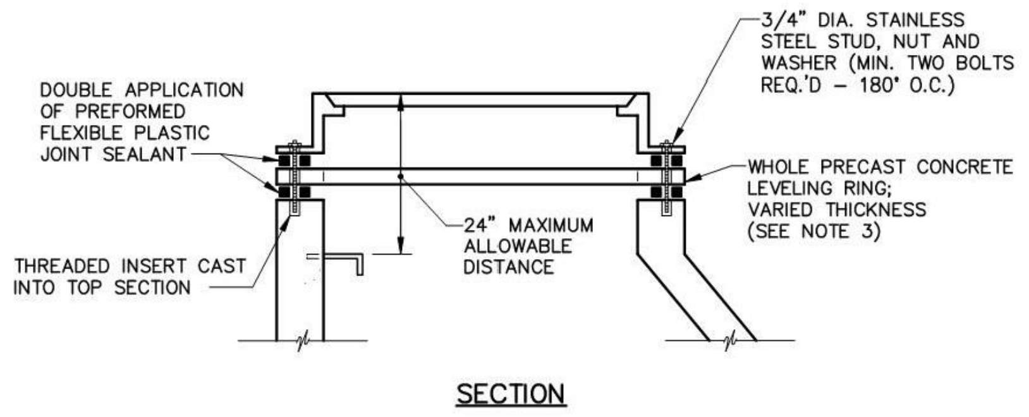
3/4" DIA. STAINLESS STEEL STUD, NUT AND WASHER (MIN. TWO BOLTS REQ.'D – 180° O.C.)
DOUBLE APPLICATION OF PREFORMED FLEXIBLE PLASTIC JOINT SEALANT
WHOLE PRECAST CONCRETE LEVELING RING; VARIED THICKNESS (SEE NOTE 3)
24" MAXIMUM ALLOWABLE DISTANCE
THREADED INSERT CAST INTO TOP SECTION
SECTION

NOTES:

1. NO CEMENT GROUTING BETWEEN MANHOLE, LEVELING RINGS AND FRAME, OR ON INSIDE OR OUTSIDE OF MANHOLE PERMITTED. SEALING WITH APPLICATION OF HIGH BUILD EPOXY COATING PERMITTED (SIKA GUARD 62 OR APPROVED EQUAL).
2. RUBBER ADJUSTMENT RISERS PERMITTED FOR PAVED AREAS AND MAY BE TAPERED FOR STREET GRADE ADJUSTMENT.
3. 3/4" DIA. STAINLESS STEEL EXPANSION ANCHOR BOLTS MAY BE USED IN PLACE OF THREADED STUDS AND INSERTS.

FILE NAME: MH-9-LEV-RINGS-BOLTED-FRAME.DWG

STANDARD DETAILS
LEVELING RINGS AND BOLTED
FRAME DETAILS
UPPER ALLEN TOWNSHIP

DATE	REVISIONS
3/08	DWG. CREATED
12/13	DWG. UPDATED
12/16	NOTE REVISIONS

SCALE: NO SCALE
DWG. NO.: MH-9

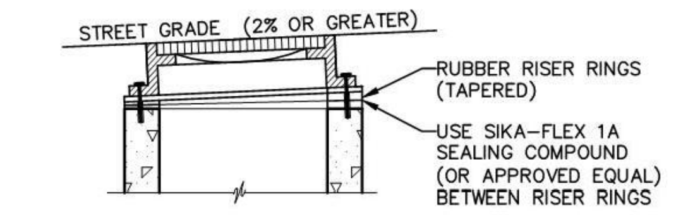
STREET GRADE (2% OR GREATER)
RUBBER RISER RINGS (TAPERED)
USE SIKA-FLEX 1A SEALING COMPOUND (OR APPROVED EQUAL) BETWEEN RISER RINGS

RUBBER RISER RING ADJUSTMENT

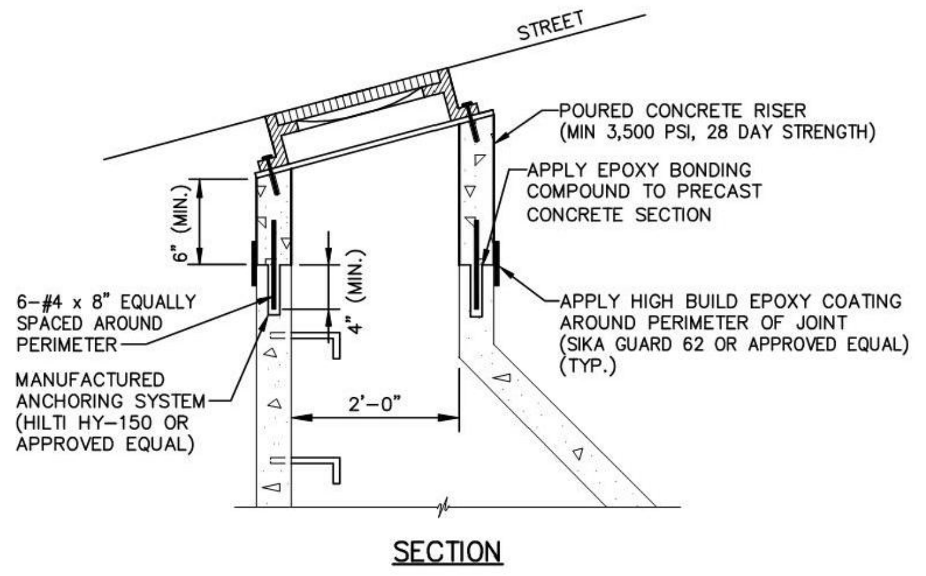
STREET
POURED CONCRETE RISER (MIN 3,500 PSI, 28 DAY STRENGTH)
APPLY EPOXY BONDING COMPOUND TO PRECAST CONCRETE SECTION
6" (MIN.)
4" (MIN.)
6-#4 x 8" EQUALLY SPACED AROUND PERIMETER
APPLY HIGH BUILD EPOXY COATING AROUND PERIMETER OF JOINT (SIKA GUARD 62 OR APPROVED EQUAL) (TYP.)
MANUFACTURED ANCHORING SYSTEM (HILTI HY-150 OR APPROVED EQUAL)
2'-0"
SECTION

POURED CONCRETE ADJUSTMENT RISER

FILE NAME: MH-11-RISER-STEEP-SLOPE.DWG

STANDARD DETAILS
MANHOLE ADJUSTMENT RISERS FOR
STREET GRADES OF 2% OR GREATER
UPPER ALLEN TOWNSHIP

DATE	REVISIONS
3/08	DWG. CREATED
11/08	RUBBER RISER REVISION
12/16	NOTE REVISIONS

SCALE: NO SCALE
DWG. NO.: MH-11

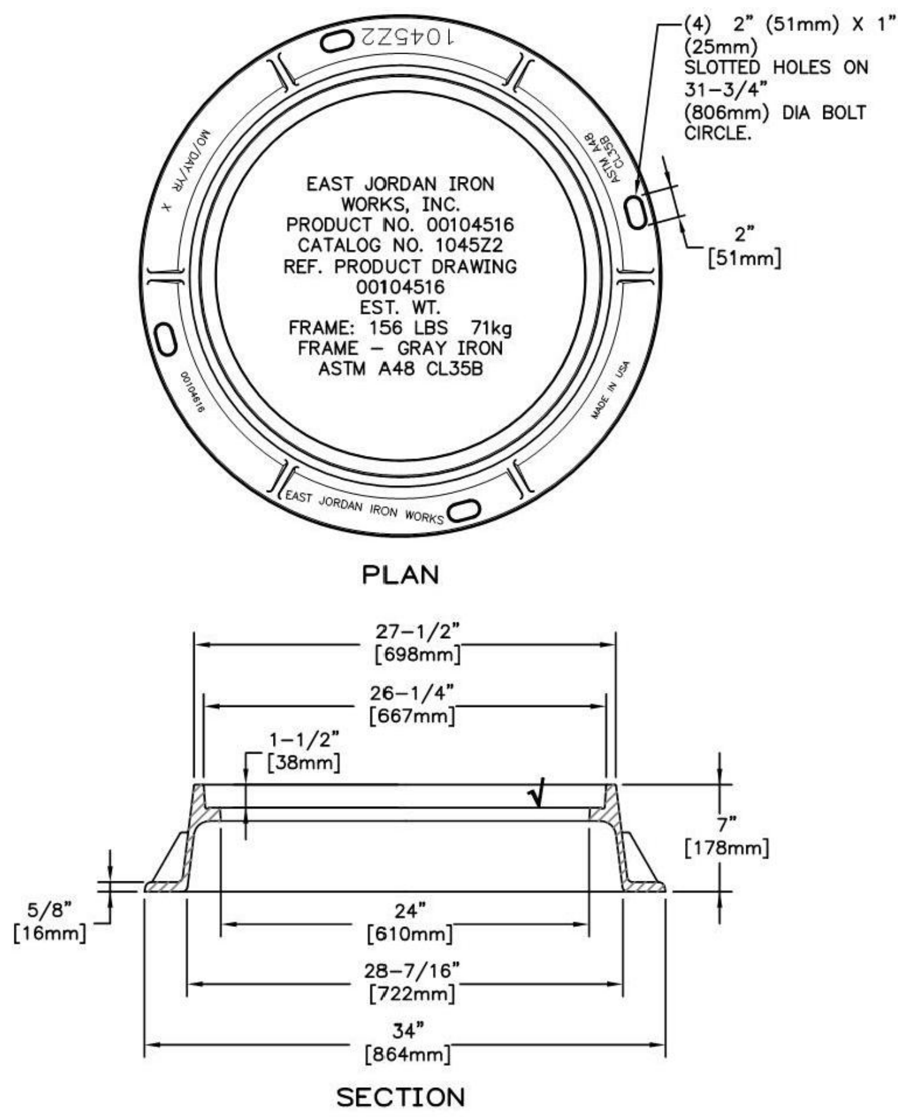
(4) 2" (51mm) X 1" (25mm) SLOTTED HOLES ON 31-3/4" (806mm) DIA BOLT CIRCLE.
1045Z2
MO/DAY/YR X
ASTM A48 CL35B
EAST JORDAN IRON WORKS, INC.
PRODUCT NO. 00104516
CATALOG NO. 1045Z2
REF. PRODUCT DRAWING 00104516
EST. WT.
FRAME: 156 LBS 71kg
FRAME – GRAY IRON
ASTM A48 CL35B
00104516
MADE IN USA
EAST JORDAN IRON WORKS
2" [51mm]
PLAN
27-1/2" [698mm]
26-1/4" [667mm]
1-1/2" [38mm]
7" [178mm]
5/8" [16mm]
24" [610mm]
28-7/16" [722mm]
34" [864mm]
SECTION

√ MACHINED SURFACE

FILE NAME: MH-2-HD-H-25-FRAME.dwg

STANDARD DETAILS
HEAVY DUTY
MANHOLE FRAME (H-25)
UPPER ALLEN TOWNSHIP

DATE	REVISIONS
3/08	DWG. CREATED

SCALE: NO SCALE
DWG. NO.: MH-2

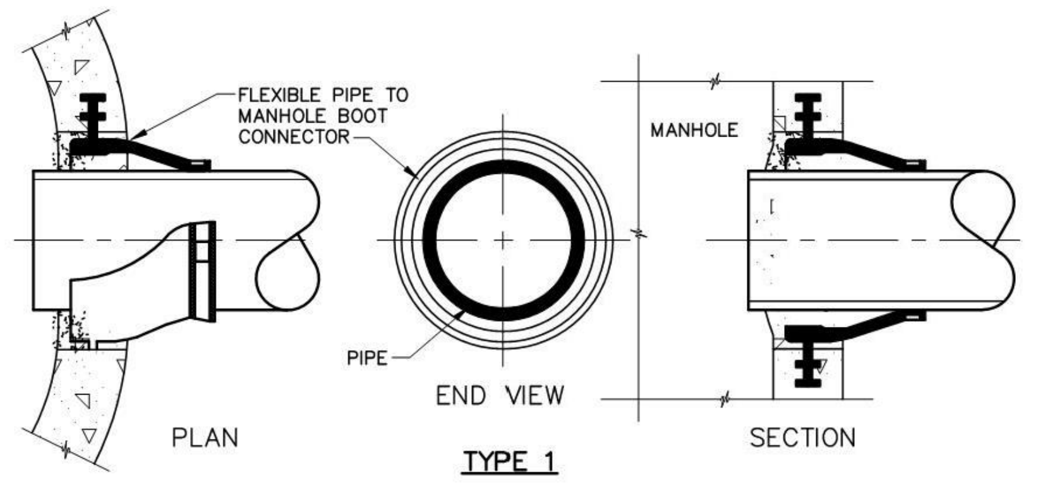
FLEXIBLE PIPE TO MANHOLE BOOT CONNECTOR
MANHOLE
PIPE
END VIEW
PLAN
SECTION

TYPE 1

RUBBER GASKET CAST INTO PRECAST STRUCTURE (A-LOK QUIK-LOK)

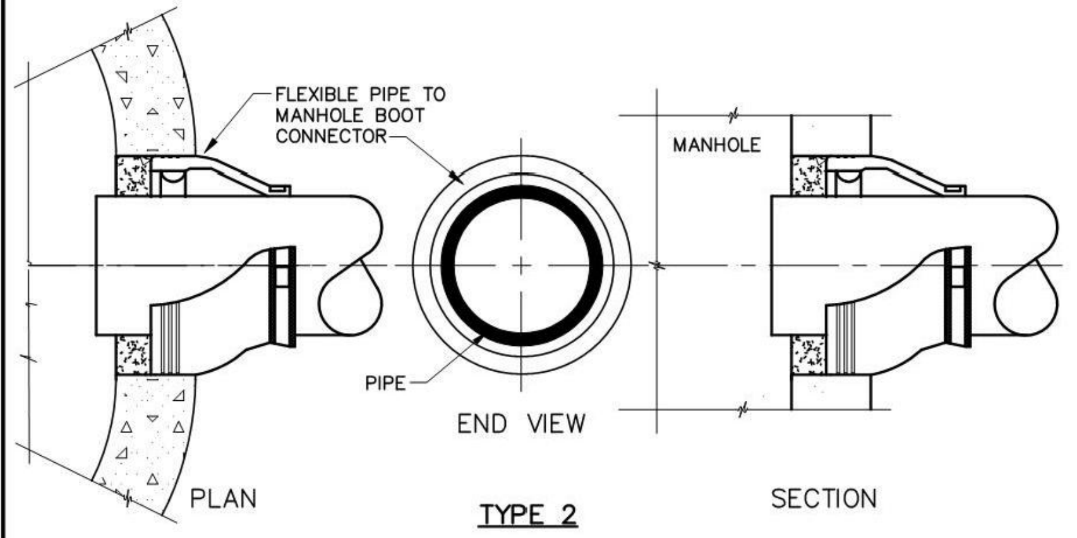
FLEXIBLE PIPE TO MANHOLE BOOT CONNECTOR
MANHOLE
PIPE
END VIEW
PLAN
SECTION

TYPE 2

RUBBER GASKET COMPRESSION RING INSERT FOR PRECAST OR CORED PIPE OPENINGS (TRELLEBORG KOR-N-SEAL)

NOTE:

AFTER PIPE-TO-MANHOLE INSTALLATION, SEAL ANNULAR SPACE AROUND PIPE ON INSIDE OF MANHOLE WITH TYPE II NON-SHRINK CEMENT GROUT. (TYP. OF ALL CONNECTIONS).

FILE NAME: MH-13-PIPE-GASKETS-2.dwg

STANDARD DETAILS
MANHOLE PIPE GASKETS
UPPER ALLEN TOWNSHIP

DATE	REVISIONS
3/08	DWG. CREATED
12/13	DWG. UPDATED
1/17	DWG. UPDATED

SCALE: NO SCALE
DWG. NO.: MH-13

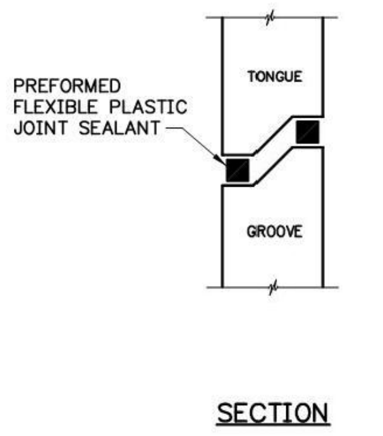
TONGUE
PREFORMED FLEXIBLE PLASTIC JOINT SEALANT
GROOVE
SECTION

FILE NAME: MH-14-SEAL.DWG

STANDARD DETAILS
MANHOLE SECTION JOINT SEAL
UPPER ALLEN TOWNSHIP

DATE	REVISIONS
3/08	DWG. CREATED

SCALE: NO SCALE
DWG. NO.: MH-14

	REVISIONS	DATE
1.		
2.		
3.		
4.		
5.		
6.		
7.		
8.		
9.		

M:\Drawings\2022\202236 Autumn Chase V\202236 DTL SAN.dwg 1/21/2023 7:45:42 PM EST

MELLOTT ENGINEERING, INC.
Civil Engineering • Land Planning & Development • Water Resources
7500 Devonshire Heights Road • Hummelstown, PA 17036
mellotteng@comcast.net
717-566-6533

SANITARY SEWER CONSTRUCTION DETAILS
FOR
AUTUMN CHASE PRD - PHASE V
Land Developer: Hertzler Road Associates, L.P.
UPPER ALLEN TOWNSHIP CUMBERLAND COUNTY PENNSYLVANIA

Project No. 202236
Date February 1, 2023

Sheet No.
16 of 21

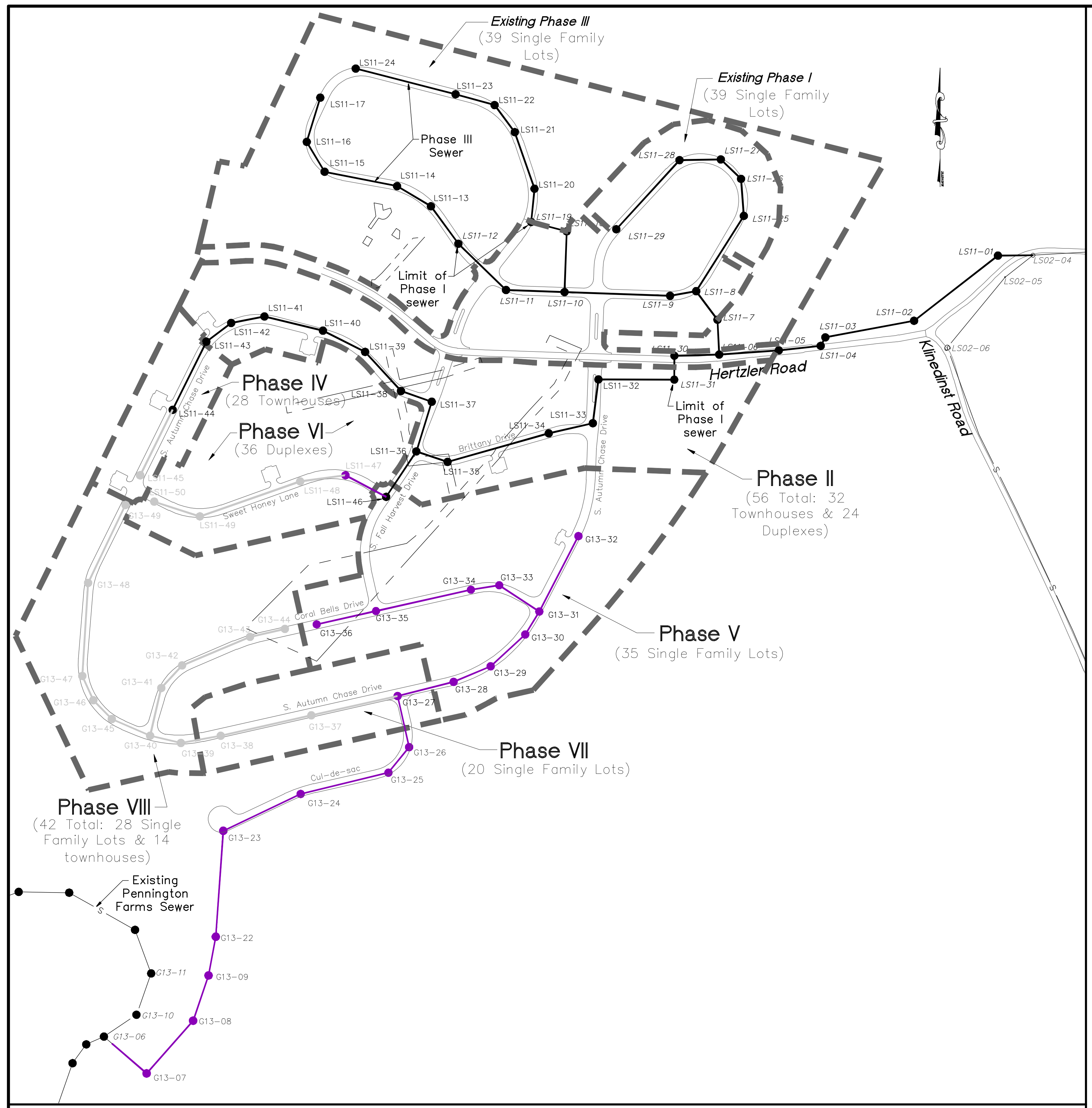
Existing Phase III
(39 Single Family Lots)
Existing Phase I
(39 Single Family Lots)
Phase III Sewer
Limit of Phase I sewer
Phase IV
(28 Townhouses)
Phase VI
(36 Duplexes)
Phase II
(56 Total: 32 Townhouses & 24 Duplexes)
Phase V
(35 Single Family Lots)
Phase VII
(20 Single Family Lots)
Phase VIII
(42 Total: 28 Single Family Lots & 14 townhouses)
Existing Pennington Farms Sewer
Hertzler Road
Kimberlin Road
Autumn Chase Drive
Cul-de-sac

SEWER INDEX MAP (Phases I - III & V)

Scale: 1" = 350'

Autumn Chase Phase II Manhole Table

Manhole ID	Northing	Easting
LS11–31	309671.2855	2189747.0931
LS11–32	309672.1566	2189461.7567
LS11–33	309507.3258	2189440.5263
LS11–34	309469.1898	2189274.4912
LS11–35	309361.5765	2188893.4667
LS11–36	309401.1110	2188775.9746
LS11–37	309588.0820	2188834.0092
LS11–38	309628.6622	2188717.9413
LS11–39	309775.9343	2188582.9085
LS11–40	309855.9186	2188424.1479
LS11–41	309909.2713	2188203.9921
LS11–42	309884.9739	2188078.3796
LS11–43	309814.5205	2187985.2336
LS11–44	309557.8283	2187858.0314
LS11–46	309230.0665	2188662.1482

Autumn Chase Phase I Manhole Table

Manhole ID	*Northing*	*Easting*
LS11–31	*309671.2855*	*2189747.0931*
LS11–30	*309761.2851*	*2189747.3679*
LS11–29	*310237.9865*	*2189528.8256*
LS11–28	*310498.4435*	*2189767.0394*
LS11–27	*310500.9512*	*2189922.4286*
LS11–26	*310427.7006*	*2189998.7128*
LS11–25	*310288.0259*	*2190009.0481*
LS11–19	*310265.1728*	*2189208.2267*
LS11–18	*310229.9955*	*2189342.0434*
LS11–12	*310183.4472*	*2188933.9678*
LS11–11	*310009.1336*	*2189113.5309*
LS11–10	*310001.3764*	*2189333.9994*
LS11–09	*309987.3969*	*2189731.3118*
LS11–08	*310004.6310*	*2189829.5479*
LS11–07	*309897.1731*	*2189909.8983*
LS11–06	*309766.1648*	*2189916.1379*
LS11–05	*309781.4463*	*2190140.6930*
LS11–04	*309798.8039*	*2190298.7632*
LS11–03	*309830.7293*	*2190315.9047*
LS11–02	*309893.2210*	*2190650.1124*
LS11–01	*310138.5917*	*2190966.0131*
LS02–04	*310139.8939*	*2191097.8051*

Autumn Chase Phase V Manhole Table

Manhole ID	Northing	Easting
G13–36	308749.6263	2188400.7721
G13–35	308799.7735	2188623.8814
G13–34	308880.1063	2188981.2891
G13–33	308896.8157	2189087.8225
G13–32	309082.0942	2189386.2417
G13–31	308797.9883	2189238.9873
G13–30	308711.7473	2189185.8254
G13–29	308591.6346	2189055.7253
G13–28	308532.9666	2188916.0513
G13–27	308479.8482	2188705.3339
G13–26	308287.1949	2188748.6356
G13–25	308191.0370	2188670.6234
G13–24	308110.8401	2188340.4090
G13–23	307971.9258	2188048.6647
G13–22	307572.9141	2188020.5650
G13–09	307427.3692	2187993.3000
G13–08	307256.9160	2187935.4579
G13–07	307058.2598	2187760.0706
G13–06	307196.6874	2187599.4439

Autumn Chase Phase III Manhole Table

Manhole ID	*Northing*	*Easting*
LS11–24	*310843.2791*	*2188547.6443*
LS11–23	*310746.3736*	*2188923.5014*
LS11–22	*310705.7149*	*2189070.3850*
LS11–21	*310603.7094*	*2189146.3821*
LS11–20	*310390.5693*	*2189220.6744*
LS11–17	*310733.3898*	*2188414.1357*
LS11–16	*310566.9996*	*2188363.2161*
LS11–15	*310454.4677*	*2188430.5288*
LS11–14	*310400.5381*	*2188703.2339*
LS11–13	*310324.4619*	*2188830.6998*

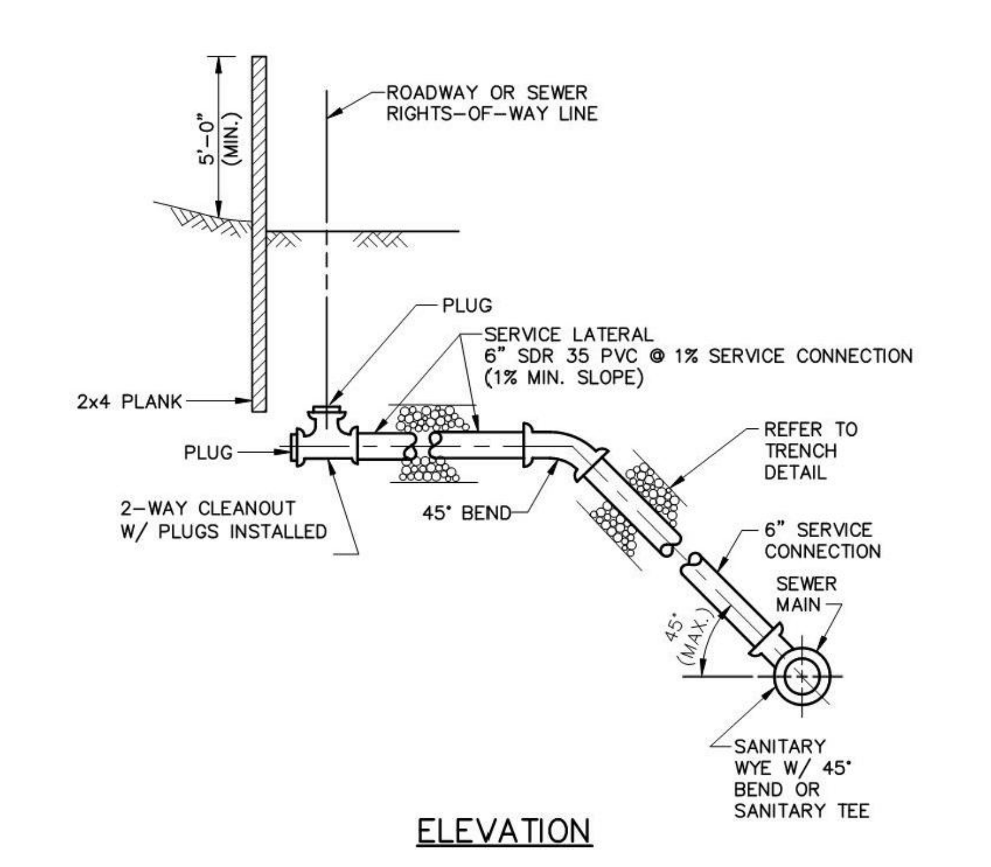
ROADWAY OR SEWER RIGHTS–OF–WAY LINE
5'–0" (MIN.)
PLUG
SERVICE LATERAL 6" SDR 35 PVC @ 1% SERVICE CONNECTION (1% MIN. SLOPE)
2x4 PLANK
PLUG
2–WAY CLEANOUT W/ PLUGS INSTALLED
45° BEND
REFER TO TRENCH DETAIL
6" SERVICE CONNECTION
SEWER MAIN
45° (MAX.)
SANITARY WYE W/ 45° BEND OR SANITARY TEE
ELEVATION

NOTES:

1. 2–WAY CLEANOUT NOT TO BE LOCATED IN SIDEWALK OR BENEATH OTHER CURB LINE UTILITIES.
2. THERE SHALL BE A 10 FOOT HORIZONTAL SEPARATION BETWEEN THE WATER SERVICE AND THE SERVICE LATERAL/BUILDING SEWER.
3. 2–WAY CLEANOUT TO BE LOCATED ON TOWNSHIP R/W AND LOCATION TO BE SITE SPECIFIC WITH RESPECT TO CURB AND SIDEWALK.
4. WHERE 2–WAY CLEANOUT IS NOT REQUIRED, SERVICE CONNECTION SHALL BE EXTENDED TO THE RIGHTS–OF–WAY LINE AND PLUGGED.
5. DETECTION TAPE REQUIRED IN PIPE TRENCH AT A DEPTH OF NO MORE THAN 12–INCHES BELOW FINAL SURFACE GRADE OR PAVEMENT SUBGRADE.
6. 2–WAY CLEANOUTS MAY ALSO BE USED FOR TESTING AND OBSERVATION.

FILE NAME: LAT–2–DEEP.DWG

STANDARD DETAILS
SERVICE LATERAL – DEEP SEWER
UPPER ALLEN TOWNSHIP

DATE	REVISIONS
3/08	DWG. CREATED
12/13	DWG. UPDATED
1/17	DWG./NOTE REVISIONS

SCALE: NO SCALE — DWG. NO. LAT–2

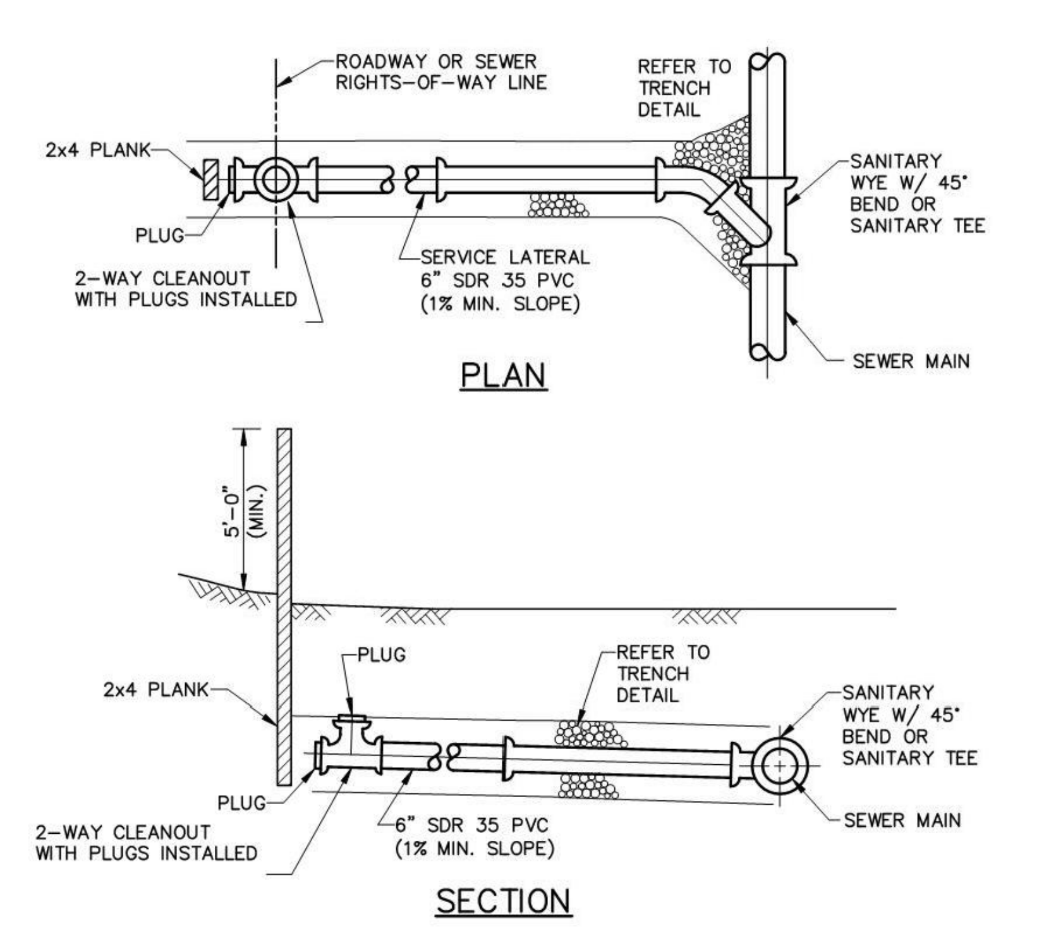
ROADWAY OR SEWER RIGHTS–OF–WAY LINE
REFER TO TRENCH DETAIL
2x4 PLANK
PLUG
2–WAY CLEANOUT WITH PLUGS INSTALLED
SERVICE LATERAL 6" SDR 35 PVC (1% MIN. SLOPE)
SANITARY WYE W/ 45° BEND OR SANITARY TEE
SEWER MAIN
PLAN
5'–0" (MIN.)
REFER TO TRENCH DETAIL
6" SDR 35 PVC (1% MIN. SLOPE)
SECTION

NOTES:

1. 2–WAY CLEANOUT NOT TO BE LOCATED IN SIDEWALK OR BENEATH OTHER CURB LINE UTILITIES.
2. THERE SHALL BE A 10 FOOT HORIZONTAL SEPARATION BETWEEN THE WATER SERVICE AND THE SERVICE LATERAL/BUILDING SEWER.
3. 2–WAY CLEANOUT TO BE LOCATED ON TOWNSHIP R/W LINE AND LOCATION TO BE SITE SPECIFIC WITH RESPECT TO CURB AND SIDEWALK.
4. WHERE 2–WAY CLEANOUT IS NOT REQUIRED, SERVICE CONNECTION SHALL BE EXTENDED TO THE RIGHTS–OF–WAY LINE AND PLUGGED.
5. DETECTION TAPE REQUIRED IN PIPE TRENCH AT A DEPTH OF NO MORE THAN 12–INCHES BELOW FINAL SURFACE GRADE OR PAVEMENT SUBGRADE.
6. 2–WAY CLEANOUTS MAY ALSO BE USED FOR TESTING AND OBSERVATION.

FILE NAME: LAT–1–SHALLOW.DWG

STANDARD DETAILS
SERVICE LATERAL – SHALLOW SEWER
UPPER ALLEN TOWNSHIP

DATE	REVISIONS
3/08	DWG. CREATED
12/13	DWG. UPDATED
1/17	DWG./NOTE REVISIONS

SCALE: NO SCALE — DWG. NO. LAT–1

STANDARD DETAILS
BUILDING SEWER DETAIL
UPPER ALLEN TOWNSHIP

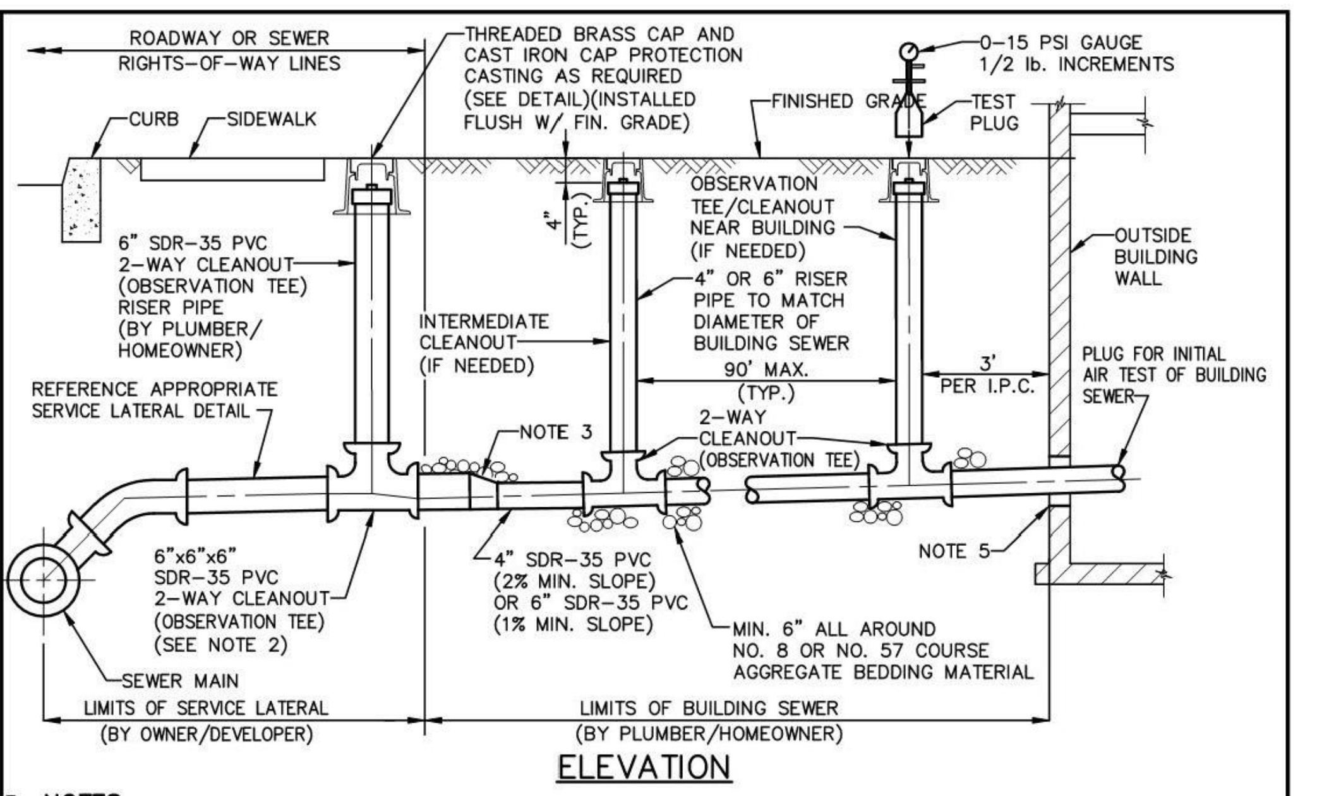
ROADWAY OR SEWER RIGHTS–OF–WAY LINES
CURB
SIDEWALK
THREADED BRASS CAP AND CAST IRON CAP PROTECTION CASTING AS REQUIRED (SEE DETAIL)(INSTALLED FLUSH W/ FIN. GRADE)
FINISHED GRADE
0–15 PSI GAUGE 1/2 lb. INCREMENTS
TEST PLUG
6" SDR–35 PVC 2–WAY CLEANOUT (OBSERVATION TEE) RISER PIPE (BY PLUMBER/HOMEOWNER)
OBSERVATION TEE/CLEANOUT NEAR BUILDING (IF NEEDED)
4" OR 6" RISER PIPE TO MATCH DIAMETER OF BUILDING SEWER
INTERMEDIATE CLEANOUT (IF NEEDED)
90' MAX. (TYP.)
OUTSIDE BUILDING WALL
PLUG FOR INITIAL AIR TEST OF BUILDING SEWER
PER I.P.C.
REFERENCE APPROPRIATE SERVICE LATERAL DETAIL
NOTE 3
2–WAY CLEANOUT (OBSERVATION TEE)
NOTE 5
6"x6"x6" SDR–35 PVC 2–WAY CLEANOUT (OBSERVATION TEE) (SEE NOTE 2)
4" SDR–35 PVC (2% MIN. SLOPE) OR 6" SDR–35 PVC (1% MIN. SLOPE)
MIN. 6" ALL AROUND NO. 8 OR NO. 57 COURSE AGGREGATE BEDDING MATERIAL
SEWER MAIN
LIMITS OF SERVICE LATERAL (BY OWNER/DEVELOPER)
LIMITS OF BUILDING SEWER (BY PLUMBER/HOMEOWNER)
ELEVATION

NOTES:

1. PIPE SIZES AND MATERIALS TO BE IN ACCORDANCE WITH TOWNSHIP REQUIREMENTS.
2. 2–WAY CLEANOUT (OBSERVATION TEE) TO BE LOCATED AT TOWNSHIP R/W LINE AND LOCATION TO BE SITE SPECIFIC WITH RESPECT TO CURB AND SIDEWALK.
3. FOR 4" BUILDING SEWER USE ECCENTRIC 4"x6" ADAPTER FITTING AT TRANSITION TO 2–WAY CLEANOUT (4"X6" FLEXIBLE COUPLING NOT ALLOWED).
4. CLEANOUT/TEST TEE SPACING IS 60' MAXIMUM, UNLESS OTHERWISE APPROVED IN WRITING BY TOWNSHIP.
5. WALL SLEEVE TO BE 2" GREATER THAN DIAMETER OF BUILDING SEWER PIPE AND SEALED WATER TIGHT.
6. ANY PIPE LESS THAN 3 FEET OF COVER SHALL BE APPROVED IN WRITING BY TOWNSHIP.
7. THERE SHALL BE A 10 FOOT HORIZONTAL SEPARATION BETWEEN WATER SERVICE AND SERVICE LATERAL/BUILDING SEWER, OR WATER SERVICE SHALL BE ENCASED IN A WATERTIGHT PVC CONDUIT SEALED AT BOTH ENDS WITH APPROPRIATE FERNCO ADAPTER.
8. INSTALL TEST PLUGS AS REQUIRED FOR ACCEPTANCE AIR TESTING.
9. TRAFFIC RATED PROTECTION CASTING REQUIRED IN PAVED AREAS ONLY.
10. DETECTION TAPE REQUIRED IN PIPE TRENCH AT A DEPTH OF 12–INCHES BELOW FINAL SURFACE GRADE OR PAVEMENT SUBGRADE.

FILE NAME: LAT–4 – BUILDING SEWER.DWG

DATE	REVISIONS
3/08	DWG. CREATED
12/13	DWG. UPDATED
5/22	DWG. UPDATED

SCALE: NO SCALE — DWG. NO. LAT–4

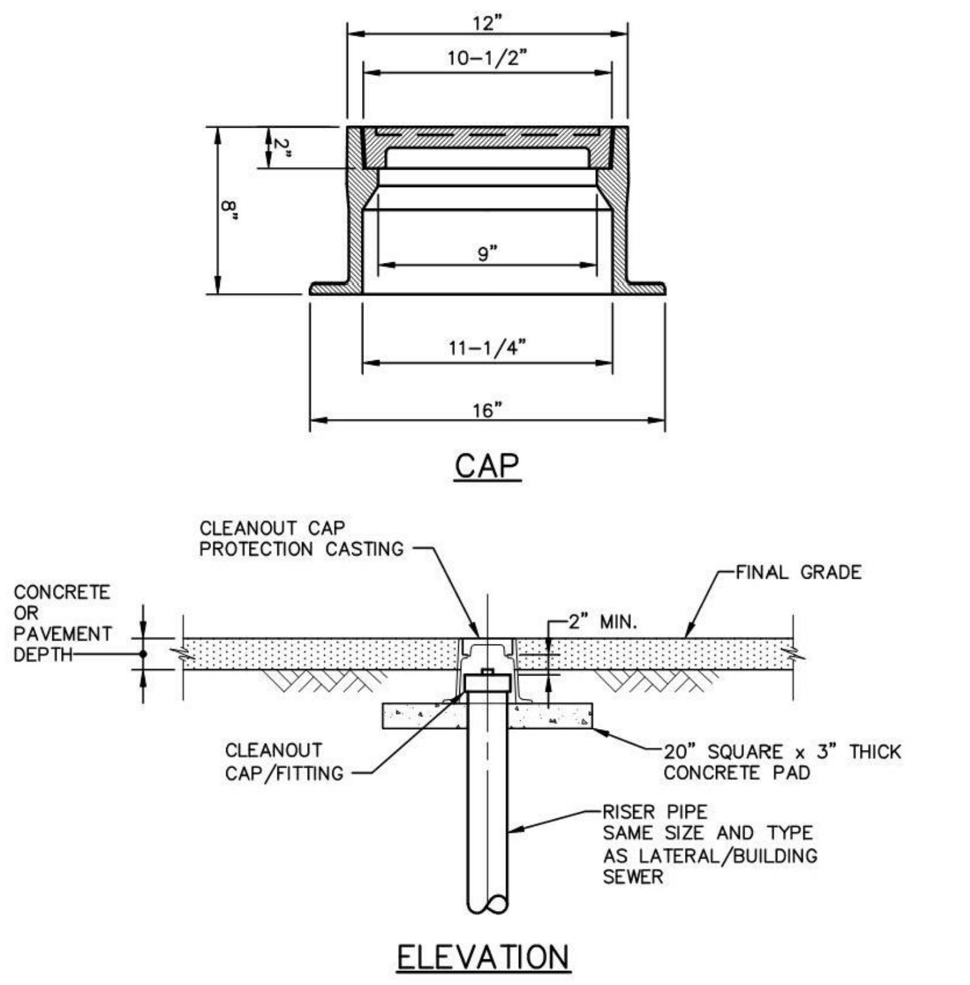
12"
10–1/2"
9"
11–1/4"
16"
CAP
CLEANOUT CAP PROTECTION CASTING
FINAL GRADE
CONCRETE OR PAVEMENT DEPTH
2" MIN.
CLEANOUT CAP/FITTING
20" SQUARE x 3" THICK CONCRETE PAD
RISER PIPE SAME SIZE AND TYPE AS LATERAL/BUILDING SEWER
ELEVATION

NOTES:

1. CASTING FRAME AND COVER SHALL BE HEAVY DUTY WITH "S" MARKING ON COVER. (EAST JORDAN IRON WORKS CATALOG No. 1565, OR APPROVED EQUAL.)

FILE NAME: LAT–8–CO–CAP.DWG

STANDARD DETAILS
CAP PROTECTION CASTING FOR
CLEANOUT COVER IN VEHICULAR TRAFFIC AREAS
UPPER ALLEN TOWNSHIP

DATE	REVISIONS
3/08	DWG. CREATED
1/17	NOTE/TITLE REVISIONS

SCALE: NO SCALE — DWG. NO. LAT–8

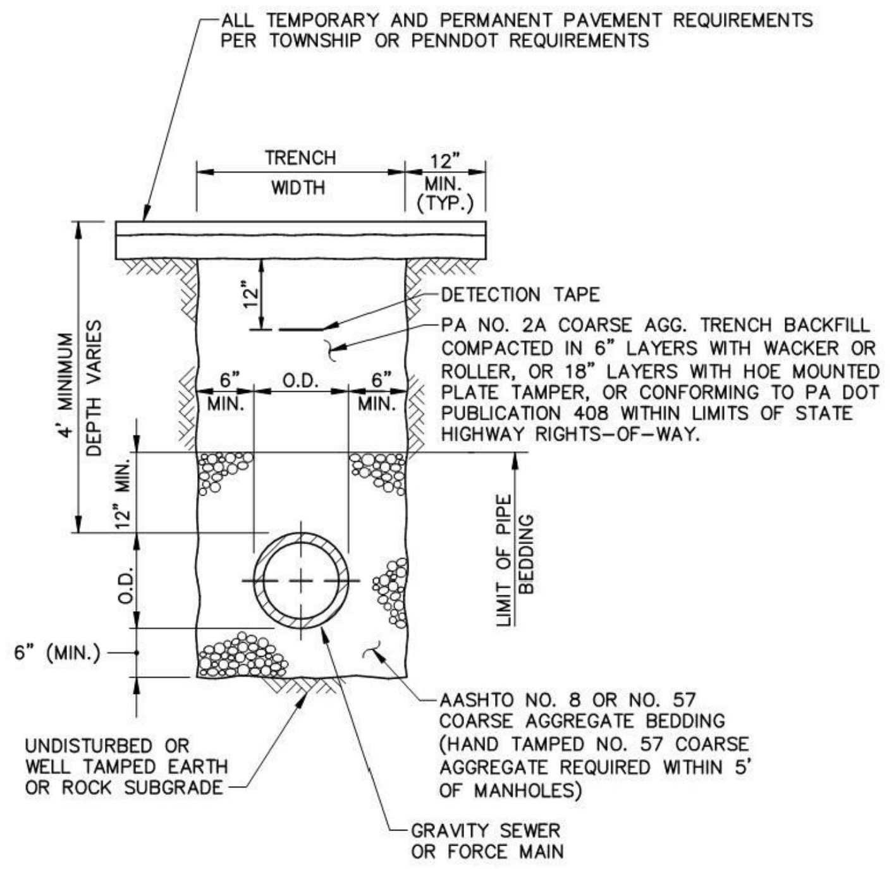
ALL TEMPORARY AND PERMANENT PAVEMENT REQUIREMENTS PER TOWNSHIP OR PENNDOT REQUIREMENTS
TRENCH WIDTH
12" MIN. (TYP.)
DETECTION TAPE
PA NO. 2A COARSE AGG. TRENCH BACKFILL COMPACTED IN 6" LAYERS WITH WACKER OR ROLLER, OR 18" LAYERS WITH HOE MOUNTED PLATE TAMPER, OR CONFORMING TO PA DOT PUBLICATION 408 WITHIN LIMITS OF STATE HIGHWAY RIGHTS–OF–WAY.
4' MINIMUM DEPTH VARIES
6" MIN.
O.D.
6" MIN.
12" MIN.
LIMIT OF PIPE BEDDING
6" (MIN.)
UNDISTURBED OR WELL TAMPED EARTH OR ROCK SUBGRADE
AASHTO NO. 8 OR NO. 57 COARSE AGGREGATE BEDDING (HAND TAMPED NO. 57 COARSE AGGREGATE REQUIRED WITHIN 5' OF MANHOLES)
GRAVITY SEWER OR FORCE MAIN

NOTE:

1. BACKFILL AND COMPACTION REQUIREMENT APPLIES TO PAVED ROADWAYS AND SHOULDERS OF PROPOSED AND EXISTING STREETS (OTHER THAN STATE HIGHWAYS), PAVED DRIVEWAYS, AND SIDEWALKS.

FILE NAME: TRENCH–1–PAVED.DWG

STANDARD DETAILS
TRENCH BACKFILL DETAIL
IN PAVED AREAS
UPPER ALLEN TOWNSHIP

DATE	REVISIONS
3/08	DWG. CREATED
12/13	DWG. UPDATED
1/17	NOTE REVISIONS

SCALE: NO SCALE — DWG. NO. TR–1

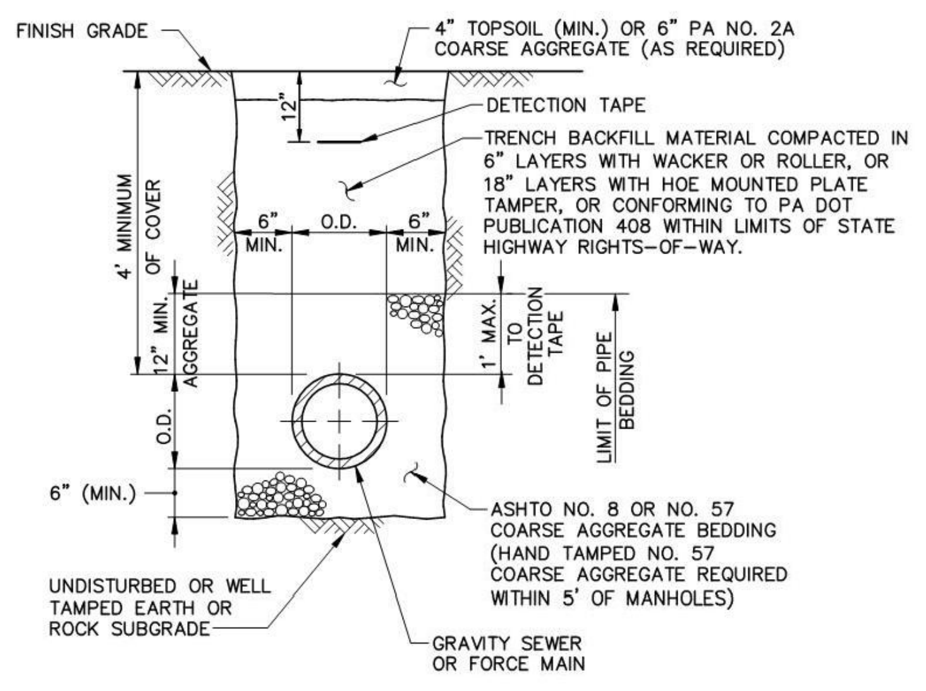
FINISH GRADE
4" TOPSOIL (MIN.) OR 6" PA NO. 2A COARSE AGGREGATE (AS REQUIRED)
DETECTION TAPE
TRENCH BACKFILL MATERIAL COMPACTED IN 6" LAYERS WITH WACKER OR ROLLER, OR 18" LAYERS WITH HOE MOUNTED PLATE TAMPER, OR CONFORMING TO PA DOT PUBLICATION 408 WITHIN LIMITS OF STATE HIGHWAY RIGHTS–OF–WAY.
4' MINIMUM OF COVER
12" MIN.
6" MIN.
O.D.
6" MIN.
1' MAX. TO DETECTION TAPE
LIMIT OF PIPE BEDDING
6" (MIN.)
UNDISTURBED OR WELL TAMPED EARTH OR ROCK SUBGRADE
ASHTO NO. 8 OR NO. 57 COARSE AGGREGATE BEDDING (HAND TAMPED NO. 57 COARSE AGGREGATE REQUIRED WITHIN 5' OF MANHOLES)
GRAVITY SEWER OR FORCE MAIN

BACKFILLING REQUIREMENTS:

1. UNPAVED AREAS OUTSIDE ROADWAYS – SUITABLE ON–SITE BACKFILL COMPACTED AS INDICATED ABOVE TO BOTTOM OF TOPSOIL. REPLACE TOPSOIL TO APPROXIMATE DEPTH OF EXISTING OR MIN. 4".
2. UNPAVED AREAS WITHIN R/W LIMITS OF STATE HIGHWAYS – CONFORMING TO REQUIREMENTS OF PA DOT PUBLICATION 408.
3. UNPAVED SHOULDERS OF PROPOSED AND EXISTING STREETS OTHER THAN STATE HIGHWAYS – AGGREGATE BACKFILL COMPACTED AS INDICATED ABOVE.
4. STONE DRIVEWAYS AND PARKING AREAS – PA NO. 2A COARSE AGGREGATE BACKFILL COMPACTED AS INDICATED ABOVE.
5. UNIMPROVED STREETS – AGGREGATE BACKFILL COMPACTED AS INDICATED ABOVE.

FILE NAME: TRENCH–2–ROW.DWG

STANDARD DETAILS
TRENCH BACKFILL DETAIL
IN UNPAVED AREAS
UPPER ALLEN TOWNSHIP

DATE	REVISIONS
3/08	DWG. CREATED
12/13	DWG. UPDATED
1/17	NOTE REVISIONS

SCALE: NO SCALE — DWG. NO. TR–2

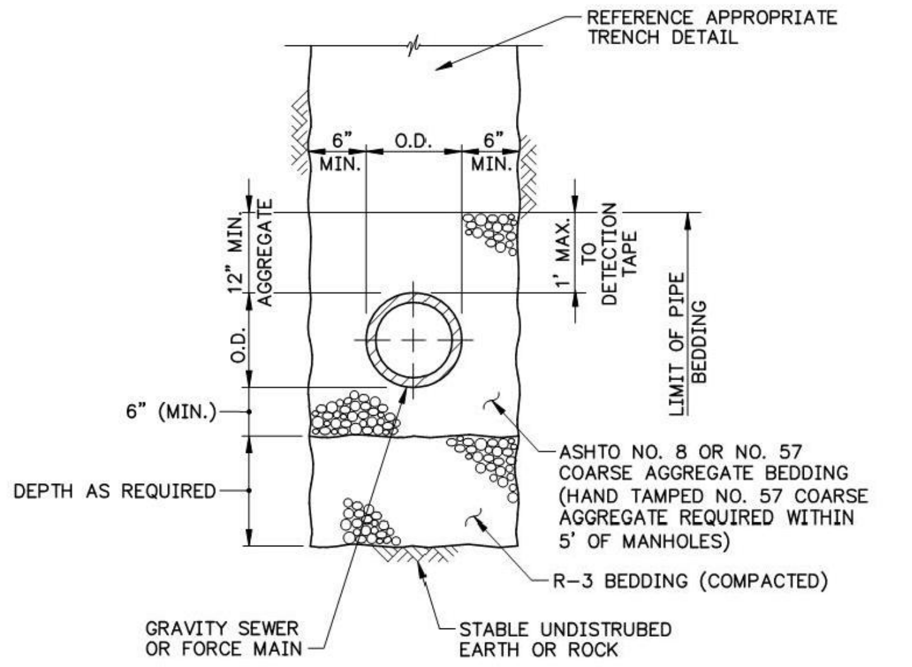
REFERENCE APPROPRIATE TRENCH DETAIL
6" MIN.
O.D.
6" MIN.
12" MIN. AGGREGATE
1' MAX. TO DETECTION TAPE
LIMIT OF PIPE BEDDING
6" (MIN.)
DEPTH AS REQUIRED
ASHTO NO. 8 OR NO. 57 COARSE AGGREGATE BEDDING (HAND TAMPED NO. 57 COARSE AGGREGATE REQUIRED WITHIN 5' OF MANHOLES)
R–3 BEDDING (COMPACTED)
GRAVITY SEWER OR FORCE MAIN
STABLE UNDISTURBED EARTH OR ROCK

NOTES:

1. IF STABLE UNDISTURBED EARTH OR ROCK UNATTAINABLE, STABILIZATION METHOD TO BE DETERMINED BY ENGINEER.
2. DETECTION TAPE REQUIRED; REFERENCE APPROPRIATE TRENCH DETAIL.

FILE NAME: TRENCH–3–UME.DWG

STANDARD DETAILS
UNSUITABLE MATERIAL EXCAVATION
UPPER ALLEN TOWNSHIP

DATE	REVISIONS
3/08	DWG. CREATED
12/13	DWG. UPDATED

SCALE: NO SCALE — DWG. NO. TR–3

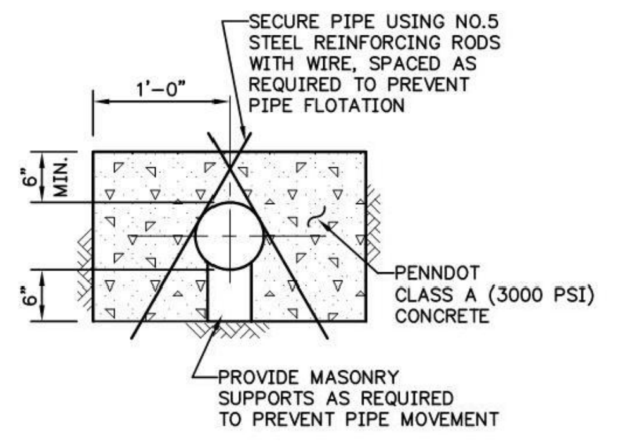
1'–0"
6" MIN.
6" MIN.
SECURE PIPE USING NO.5 STEEL REINFORCING RODS WITH WIRE, SPACED AS REQUIRED TO PREVENT PIPE FLOTATION
PENNDOT CLASS A (3000 PSI) CONCRETE
PROVIDE MASONRY SUPPORTS AS REQUIRED TO PREVENT PIPE MOVEMENT

FILE NAME: TRENCH–7–CONC–ENCASEMENT.DWG

STANDARD DETAILS
CONCRETE ENCASEMENT DETAIL
UPPER ALLEN TOWNSHIP

DATE	REVISIONS
3/08	DWG. CREATED

SCALE: NO SCALE — DWG. NO. TR–7

	REVISIONS	DATE
1.	PPL Utility Pole location updates (PPL replaced existing poles)	2–17–2023
2.	Addressing Review Comments	3–7–2023
3.	–	–
4.	–	–
5.	–	–
6.	–	–
7.	–	–
8.	–	–
9.	–	–

M:\Drawings\2022\202236 Autumn Chase V\202236 DTL SAN.dwg 3/7/2023 7:12:55 PM EST

MELLOTT ENGINEERING, INC.
Civil Engineering • Land Planning & Development • Water Resources
7500 Devonshire Heights Road • Hummelstown, PA 17036
mellotteng@comcast.net
717–566–6533

SANITARY SEWER CONSTRUCTION DETAILS
FOR
AUTUMN CHASE PRD – PHASE V
Land Developer: Hertzler Road Associates, L.P.
UPPER ALLEN TOWNSHIP CUMBERLAND COUNTY PENNSYLVANIA

Project No. 202236
Date February 1, 2023

Sheet No.
17 of 21

EROSION CONTROL PLAN OVERVIEW NOTE

The erosion control plans approved with the NPDES Permit for this project addressed construction for all work south of Hertlzer Road (all remaining phases). The CCCD approved Erosion Control Plan consisted of eight plan sheets; the contractor must have a copy of this Phase V Plan set and the eight page approved Erosion Control Plan set on site at all times during construction. This Phase V Plan set is consistent with the approved CCCD approved Erosion Control Plan set excluding removal of sheets that are not pertinent to this Phase V Plan. To maintain consistency with the CCCD approved plans, the below "Erosion Control Plan Intent Note" is as approved with the overall E&S Plan set although please note there is only one Sediment Basin (Basin 5) proposed with this Phase V plan.

EROSION CONTROL PLAN INTENT NOTE

Autumn Chase is a partially constructed residential community consisting of a total of 317 proposed residential dwellings. This Plan shall address erosion control measures to be implemented with the Autumn Chase Project for all construction south of Hertzler Road (previous plan approvals were previously granted for Hertzler Road improvements and Phases I & 3 located on the north side of Hertzler Road, 78 single–family dwelling lots). The construction on the south side of Hertzler Road consists of 239 dwelling units and associated infrastructure. Subdivision Plans shall be processed with the Township in several separate Phases although this erosion control plan set shall address all phases of construction with a single overall erosion control plan. While this erosion control plan shall address all earth disturbance proposed on the south side of Hertzler Road, the sequencing and associated construction shall be proposed in stages as detailed on these plans. The first stage (Stage 1) of construction shall address the initial earthwork and improvements associated with Autumn Chase Phase II, the second stage (Stage 2) shall address earthwork and improvements associated with Autumn Chase Phase V and the third stage (Stage 3) shall address all remaining phases. There are no DEP permits required for the proposed work detailed on these plans although a Water Obstruction and Encroachment Permit was obtained for the stream impacts associated with Hertlzer Road improvements (Permit No. E21–468, issued on April 28, 2020.); see previously approved Erosion Control Plans for Phase I.

The E&S control BMPs associated with this plan consists of three sediment basins, one existing sediment trap, rock construction entrances, water bars, vegetated swales, riprap aprons, silt barriers and stabilization requirements. See below general description of each proposed E&S BMP:

Stabilized Rock Construction Entrances:
Rock construction entrances shall be installed at specific locations where construction equipment shall transition from stabilized areas to the disturbance areas, see plan and sequencing for installation timing and locations. All ingress & egress to the site shall be through a defined RCE.

Sediment Basins:
There are three Sediment Basins proposed with this plan; The basins shall provide treatment of sediment laden runoff prior to discharge.

Sediment Trap:
There is one existing temporary sediment trap previously installed with Phase I construction although the trap will be removed early in the construction sequence (referenced in this note for completeness).

Water Bars:
Water bars are proposed to direct sediment laden runoff to a proposed treatment BMP.

Vegetated Swales:
Vegetated swales are proposed for collection and conveyance of runoff.

Riprap Aprons:
Riprap aprons are proposed at all pipe discharges. Riprap aprons provide energy dissipation and returns runoff flow to a sheet flow condition.

Silt Barriers:
Silt barriers shall be installed down slope of all earth disturbances that do not drain to a sediment basin or trap. Silt barriers shall be compost filter socks. Silt barriers shall filter sediment laden runoff.

Stabilization:
All pervious disturbed areas shall be permanently stabilized with vegetated cover in accordance with the stabilization measures specified on the plan. All proposed slope 3 to 1 and graded shall be matted with NAG S75 matting or equivalent.

GENERAL EROSION CONTROL NOTES

1. The existing NPDES Permit for the project is PAC210094A–1. There is no other DEP permitting required for the proposed construction associated with this plan although Water obstruction and encroachment permitting was obtained for the Hertzler Road improvements (Hertzler Road improvements plan was previously approved with Phases 1 & 3 approvals, Water Obstruction Permit No. E21–468, issued on April 28, 2020.).
2. The entire project site is located within the Yellow Breeches Creek watershed (CWF).
3. Wetlands shown on this plan are per field delineation performed by Vortex Environmental, Inc.. No wetland impacts are proposed with this project.
4. BMPs, trees, debris and any other materials not proposed to permanently remain on–site are to be recycled or disposed of in accordance with Department of Environmental Protection regulations. All building materials and wastes must be removed from the site and recycled or disposed in accordance with the Department's Solid Waste Management Regulations at 25 Pa. Code 260.1 et seq., 271.1 et seq., and 287.1 et seq. No building material or wastes or unused building materials shall be buried, dumped, or discharged at the site.
5. Autumn Chase NPDES permittee and the Autumn Chase site contractor shall both become a copermittee to the Pennington NPDES permit prior to performing the offsite sanitary sewer extension within the Pennington community.

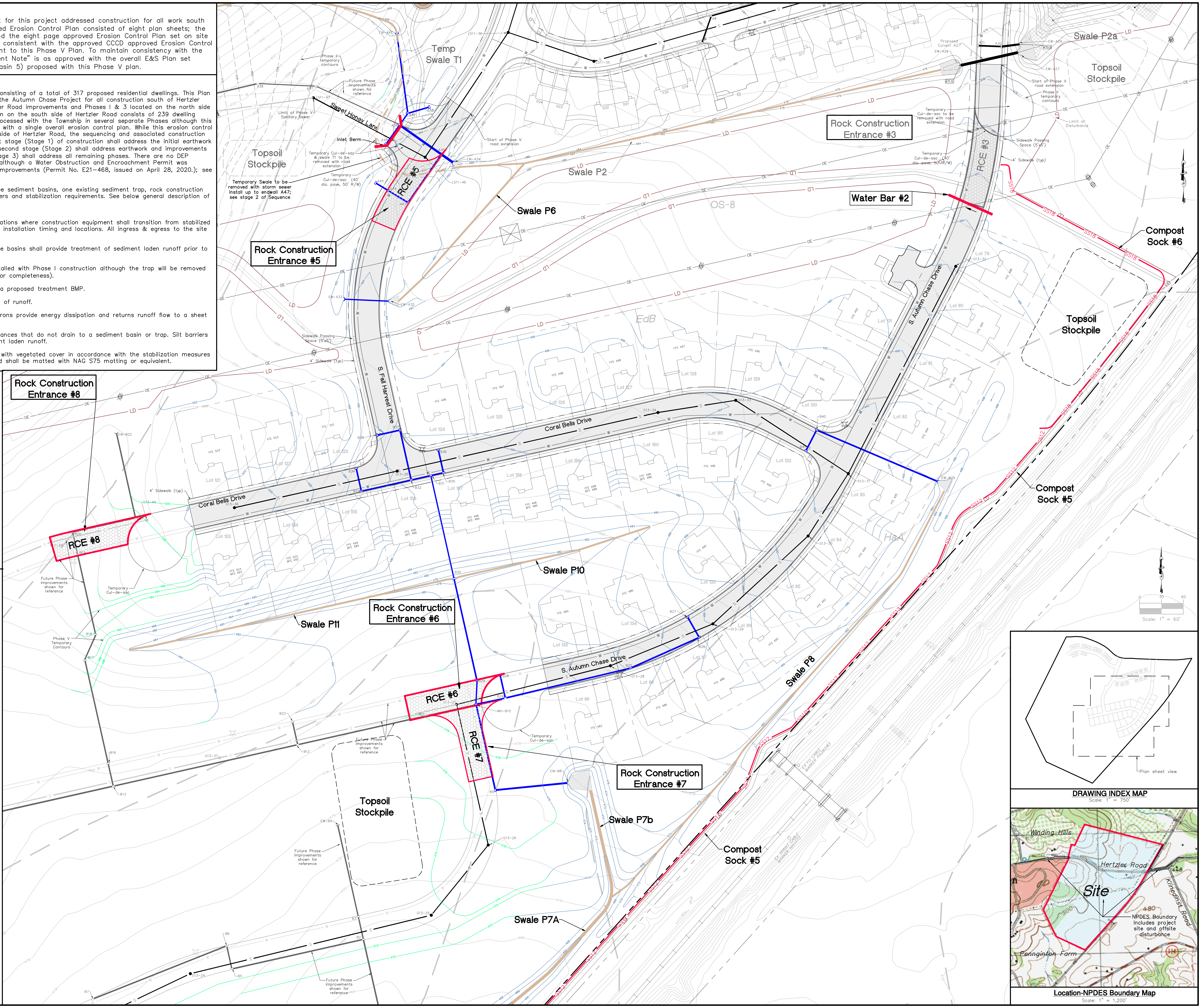
Rock Construction Entrance #5
Rock Construction Entrance #8
Rock Construction Entrance #6
Rock Construction Entrance #7
Rock Construction Entrance #3
RCE #5
RCE #8
RCE #6
RCE #7
RCE #3
Water Bar #2
Compost Sock #6
Compost Sock #5
Topsoil Stockpile
Topsoil Stockpile
Topsoil Stockpile
Topsoil Stockpile
Temp Swale T1
Swale P2
Swale P2a
Swale P6
Swale P10
Swale P11
Swale P8
Swale P7b
Swale P7A
Sweet Honey Lane
S. Fall Harvest Drive
Coral Bells Drive
S. Autumn Chase Drive
Inlet Berm
Temporary Swale to be removed with storm sewer install up to endwall A47; see stage 2 of Sequence
Temporary Cul–de–sac
Future Phase improvements shown for reference
Phase V Temporary Contours
Sidewalk Passing Space (5'x5')
4' Sidewalk (typ)
OS-8
EdB
HeA
Scale: 1" = 60'
DRAWING INDEX MAP
Scale: 1" = 750'
Plan sheet view
Winding Hills
Hertzler Road
Kilnedinst Road
Pennington Farm
Site
NPDES Boundary includes project site and offsite disturbance
Location-NPDES Boundary Map
Scale: 1" = 1,200'
ES1

LEGEND

SS18	18" COMPOST FILTER SOCK
SS12	12" COMPOST FILTER SOCK
LD	PROPOSED LIMIT OF DISTURBANCE
RCE #1	ROCK CONSTRUCTION ENTRANCE
A1	PROPOSED STORM SEWER, INLET
A	PROPOSED END SECTION / ENDWALL W/ RIPRAP
S	PROPOSED SANITARY SEWER, MANHOLE
W	PROPOSED WATER LINE
	PROPOSED EDGE OF PAVE/CURB LINE
	PROPOSED STREET & PARKING PAVEMENT
	PROPOSED RIGHT–OF–WAY LINE
	PROPOSED PROPERTY LINE
475.0	PROPOSED SPOT ELEVATION
	PROPOSED SWALE LINING
458	PROPOSED 2' CONTOUR
458	PROPOSED 2' TEMPORARY CONTOUR
398	*Existing 2' Contour*
	Existing Property Line
	Existing Adjoining Property
	Existing Right–of–way
	Existing Edge of Pave
I–1	*Existing Storm Sewer, Inlet, ID#*
BdC	SOIL TYPE AND BOUNDARY

Before You Dig Anywhere

In . . . PENNSYLVANIA

STOP! Call 1–800–242–1776
Toll Free

PA Law requires 3 working days before you excavate

PA One Call System, Inc.

One Call Serial #: –

PENNSYLVANIA ACT 199 (2004) AS AMENDED REQUIRES NOTIFICATION OF EXCAVATORS, DESIGNERS, OR ANY PERSON PREPARING TO DISTURB THE EARTH'S SURFACE ANYWHERE IN THE COMMONWEALTH.

EROSION AND SEDIMENTATION CONTROL PLAN
FOR
AUTUMN CHASE PRD - PHASE V
Land Developer: Hertzler Road Associates, L.P.
UPPER ALLEN TOWNSHIP CUMBERLAND COUNTY PENNSYLVANIA

MELLOTT ENGINEERING, INC.
Civil Engineering • Land Planning & Development • Water Resources
7500 Devonshire Heights Road • Hummelstown, PA 17036
mellotteng@comcast.net
717–566–6533

REVISIONS	DATE
1. –	–
2. –	–
3. –	–
4. –	–
5. –	–
6. –	–
7. –	–
8. –	–
9. –	–

Project No. 202236
Date February 1, 2023
Sheet No. ES1

SEQUENCE OF CONSTRUCTION (Stage 2)

The following Sequence of Construction includes references to the proposed temporary erosion control measures and permanent stormwater BMPs; see the PCSM Plan sheets for the permanent BMPs.

Stage 2 construction consists of Phase V infrastructure improvements (roads and utilities) and grading as shown.

1. Initial access to Stage 2 construction shall be through existing RCE #3 installed with Stage 1 (Phase 2) construction (limit of S. Autumn Chase Drive). RCEs 5, 6, 7 and 8 shall be installed later in this Stage 2 sequence.
2. Field mark limits of disturbance.
3. Install construction fencing and/or flagging around basin bottoms to prevent undesired compaction.
4. Install Compost filter sock as shown.
5. Install water bar #2 just upslope of existing RCE#3 (RCE #3 was installed with Stage 1).
6. Critical Stage of Construction. Install Sediment Basin 5 including permanent outlet structure, temporary riser attachment, outfall pipe, riprap apron, baffle and cleanout stake (See Details). The outfall pipe shall be installed with a concrete cradle (no cradle required for existing pipe stub installed under the existing nature trail, cradle only required for the proposed basin outfall pipe extension). To minimize soil compaction of the subsoils below the basin bottom, basin excavation shall be performed from the sides of the basin to the extent possible once grading is within 2' of proposed finished grade. Any grading that cannot be performed from the sides of the basin(s) shall be performed with wide track equipment (no rubber tire equipment to be used in basin bottom areas due to concentrated loads that occur under the tires). See end of sequence notes for basin conversion and soil restoration/amendment notes.
7. Install Swales P7 and P8; immediately stabilize swales (see detail). Swales P7&8 provide for collection and conveyance to Sediment Basin 5. The installation of the compost sock, sediment Basin 5 and swales P7 & P8 provide for full perimeter controls for Stage 2 construction.
8. RCE 5 installation off limit of S. Fall Harvest Drive: Storm sewer must be installed prior to RCE 5 installation. Install all storm sewer located at the future street intersection of S. Fall Harvest Drive and Sweet Honey Lane starting at proposed endwall A34 extending up to inlet A45 and endwall A47. Immediately install riprap apron at A34 pipe discharge. Install inlet berms at Sweet Honey Lane inlets A36 & A49. The installation of the above referenced storm sewer allows for the removal of temporary swale T1 (installed with previous stage 1 construction) and installation of RCE #5. Ingress and egress to stage 2 construction area shall be restricted to the construction entrances only.
9. Install Swale P6; immediately stabilize swale (see detail). Swale P6 drains into existing Swale P2 whichs conveys runoff to Sediment Basin 4A.
10. Install storm sewer culvert A33 to A32; culvert shall convey upslope runoff under S. Fall Harvest Drive extension with discharge into Swale P6. Immediately install riprap apron at pipe discharge.
11. After the above described perimeter erosion control measures are installed strip and stockpile topsoil as needed for areas to be regraded; stockpiles shall not exceed a maximum height of 35 feet and shall be no steeper than 2:1. Stockpiles to be stabilized accordingly.
12. Perform bulk grading. Grading shall be such as to maintain sediment laden runoff to the intended receiving sediment control BMP(s).
13. Begin utilities installation. Disturbance associated with the offsite sanitary sewer installation into the Pennington Community shall be immediately stabilized with topsoil, seeding and mulch. Prior to initiating the offsite sanitary sewer installation, the developer and site contractor shall become copermittees to the Pennington Community NPDES permit. Note while disturbance area shall be immediately stabilized, the majority of the area also drains to the existing Pennington Sediment Basin.
14. Install conduit street crossings for electric and telecommunications. Install street curbing after utilities installation. Install stone subbase on streets as soon as possible to shield soil from erosion. Install out of street electric and telecommunication utilities.
15. Install rock construction entrances #6, 7 and 8 off the limits of the stage 2 (Phase V) temporary cul-de-sacs as shown.
16. Replace topsoil and permanently seed and mulch all non-paved areas where grading is complete. As disturbed areas within a project approach final grade, preparations should be made for seeding and mulching to begin (i.e. anticipate the completion date and schedule the seeder). In no case should an area exceeding 15,000 square feet, which is to be stabilized by vegetation, reach final grade without being seeded and mulched.
17. Begin building construction. Home builders shall implement Typical Individual On-Lot Erosion Controls to limit sediment from entering streets or abutting developed lots although no additional on lot measures are needed for disturbance areas that drain directly to the Sediment basin.
18. The erosion control measures may not be removed until the entire upslope drainage area has a permanent stabilization. This occurs with a minimum uniform 70% perennial vegetative cover or other permanent non-vegetative cover with a density sufficient to resist accelerated surface erosion and subsurface characteristics sufficient to resist sliding and other movements. All paved areas must be paved or have a compacted stone base in place. Upon completion of all earth disturbance activities and permanent stabilization of all disturbed areas, the owner and/or operators shall contact the County Conservation District for an inspection prior to the removal of the erosion control BMP's.
19. After the Conservation District representative has inspected the site and agrees the site is stabilized the BMP's can be removed as follows:
    a. Critical Stage of Construction (Sed Basin 5 conversion): Sediment Basin 5 shall be used as a sediment Basin for future phase construction although after future phase construction and after all upslope contributing areas are permanently stabilized and after receiving authorization from a CCCD representative Sediment Basin 5 can be converted to the permanent stormwater basin configuration. Install 18" compost sock around outlet structure to provide for filtering during final stabilization process. Remove temporary riser attachment and convert outlet structure to permanent condition. Soil restoration and amendments of the Stormwater Basin bottom shall be provided at time of conversion. The basin bottom preparation consists of over excavating the basin bottoms to 12" below finished grade, scarification/till the subgrade bottom (10" depth desired), smooth out bottom with light weight track equipment and place 12" of the amended soils mixture across basin bottom followed by stabilization with intended basin seed mixture and mulch.
    b. Silt barriers can be removed.
    c. BMPs, trees, debris and any other materials not proposed to permanently remain on-site are to be recycled or disposed of in accordance with Department of Environmental Protection regulations. All building materials and wastes must be removed from the site and recycled or disposed in accordance with the Department's Solid Waste Management Regulations at 25 Pa. Code 260.1 et seq., 271.1 et seq., and 287.1 et seq. No building material or wastes or unused building materials shall be buried, dumped, or discharged at the site.

SOILS TABLE

SOIL SYMBOL	SOIL DESCRIPTION	SLOPE (%)	HYDROLOGIC GROUP	DEPTH TO WATER TABLE (FT)	SOIL REACTION (pH)	SUITABILITY FOR ROADFILL	SUITABILITY FOR TOPSOIL
BdB	Bedington Shaly Silt Loam	3 to 8%	B	5+	4.5–7.3	FAIR	POOR
BdC	Bedington Shaly Silt Loam	8 to 15%	B	5+	4.5–7.3	FAIR	POOR
BdD	Bedington Shaly Silt Loam	15 to 25%	B	5+	4.5–7.3	FAIR	POOR
BpB	Blairton silt loam	3 to 8%	C	½–3	4.5–5.5	POOR	POOR
BrB	Brinkerton silt loam	3 to 8%	D	0–½	4.5–5.5	POOR	POOR
DuB	Duffield silt loam	3 to 8%	B	5+	5.1–7.3	POOR	FAIR
EdB	Edom silt loam	3 to 8%	B	5+	5.1–7.8	POOR	POOR
EdC	Edom silt loam	8 to 15%	B	5+	5.1–7.8	POOR	POOR
HaA	Hagerstown shaly silt loam	0 to 3%	B	5+	4.5–7.3	POOR	POOR
HaB	Hagerstown shaly silt loam	3 to 8%	B	5+	4.5–7.3	POOR	POOR
Me	Melvin silt loam	0 to 2%	B/D	0–1	6.1–7.3	POOR	POOR
Pe	Penlaw silt loam	0 to 3%	C/D	½–1½	5.6–7.3	POOR	POOR

In general, the soils present should not pose any significant limitation to the type of development proposed. Reference the following recommendation pertaining to possible issues that may be encountered during construction.

- If unrippable rock is encountered during proposed grading, blasting or drilling may be required. Removed rock can be crushed if necessary and used for fill.
- If water table is encountered during excavation, dirty water shall be pumped out into a filter bag or sediment removal pond.
- The NRCS Soil Survey indicates some of the soils have a poor rating for use as road fill. The contractor should use only what soils are suitable for road fill and shall place and compact fill in accordance with standard practice. All road fill must meet Penn DOT Pub. 408 standards.
- Trap/Basin Core material shall be unified class CH or CL soil compacted to 98% of max dry density. Homogeneous embankment material to be compacted in 8" layers to a minimum final density of not less than 98% of max. Dry density within 2% of optimum moisture content. (ASTM Method D1557).
- If sinkhole is encountered during construction contractor and/or owner should immediately consult with a Geotechnical Engineer for guidance on proper sinkhole repair.

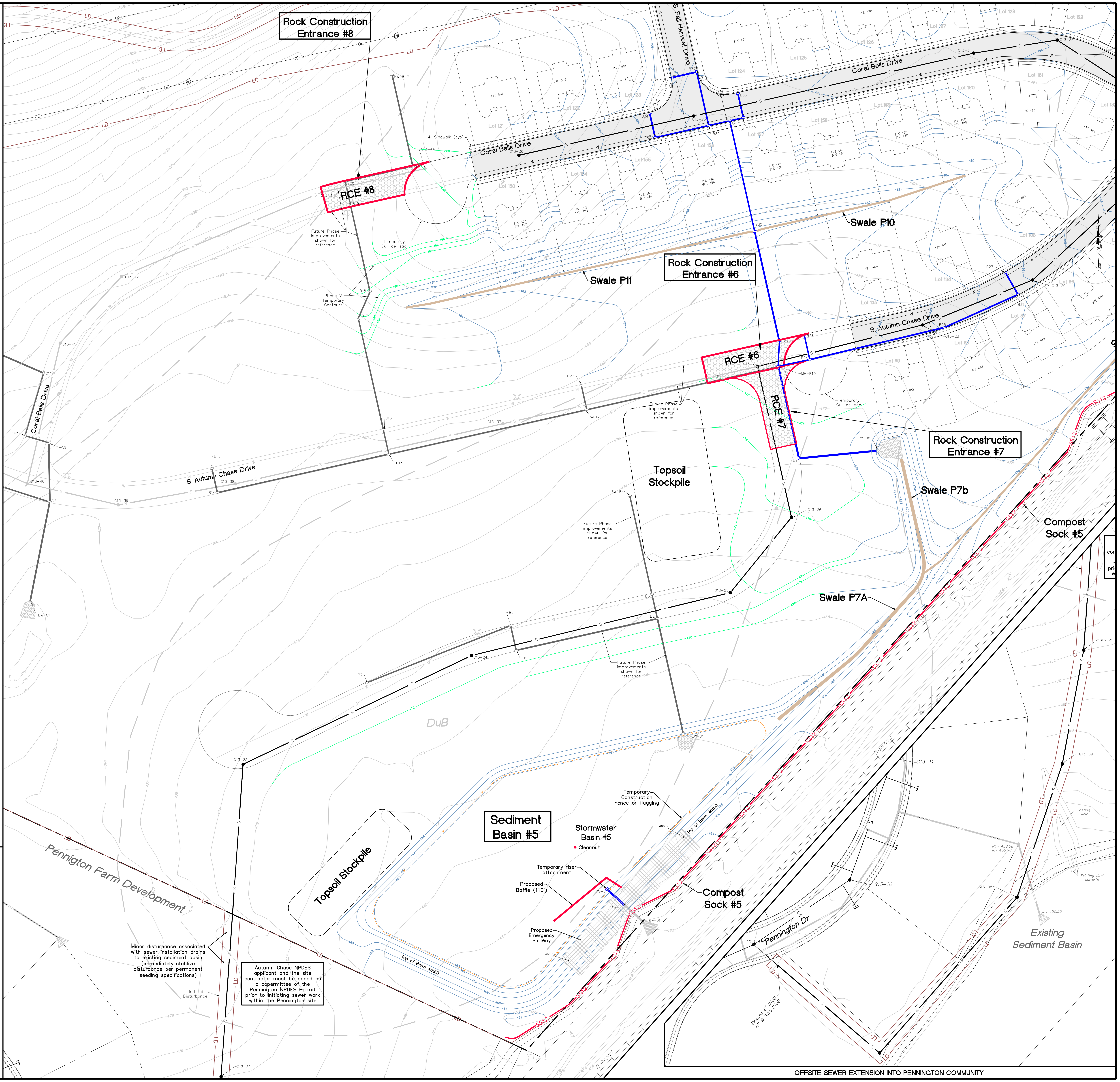
Rock Construction Entrance #8
RCE #8
Coral Bells Drive
S. Fall Harvest Drive
4' Sidewalk (typ)
Future Phase improvements shown for reference
Temporary Cul-de-sac
Phase V Temporary Contours
Swale P10
Swale P11
Rock Construction Entrance #6
RCE #6
RCE #7
S. Autumn Chase Drive
Temporary Cul-de-sac
Rock Construction Entrance #7
Topsoil Stockpile
Swale P7b
Compost Sock #5
Swale P7A
DuB
Pennington Farm Development
Topsoil Stockpile
Sediment Basin #5
Stormwater Basin #5
● Cleanout
Temporary Construction Fence or flagging
Top of Berm 468.0
466.5
Temporary riser attachment
Proposed Baffle (110')
OS-5
Proposed Emergency Spillway
Compost Sock #5
Pennington Dr
Existing Sediment Basin
Railroad
Minor disturbance associated with sewer installation drains to existing sediment basin (immediately stablize disturbance per permanent seeding specifications)
Limit of Disturbance
Autumn Chase NPDES applicant and the site contractor must be added as a copermittee of the Pennington NPDES Permit prior to initiating sewer work within the Pennington site
OFFSITE SEWER EXTENSION INTO PENNINGTON COMMUNITY

ES2

REVISIONS
1.
2.
3.
4.
5.
6.
7.
8.
9.

DATE

M:\Drawings\2022\202236 Autumn Chase V\202236 ES.dwg 1/26/2023 12:29:32 PM EST

MELLOTT ENGINEERING, INC.
Civil Engineering • Land Planning & Development • Water Resources
7500 Devonshire Heights Road • Hummelstown, PA 17036
mellotteng@comcast.net
717-566-6533

EROSION AND SEDIMENTATION CONTROL PLAN
FOR
AUTUMN CHASE PRD - PHASE V
Land Developer: Hertzler Road Associates, L.P.
UPPER ALLEN TOWNSHIP CUMBERLAND COUNTY PENNSYLVANIA

Project No. 202236
Date February 1, 2023

Sheet No. ES2
19 of 21

100' RCE length required to meet ABACT requirements

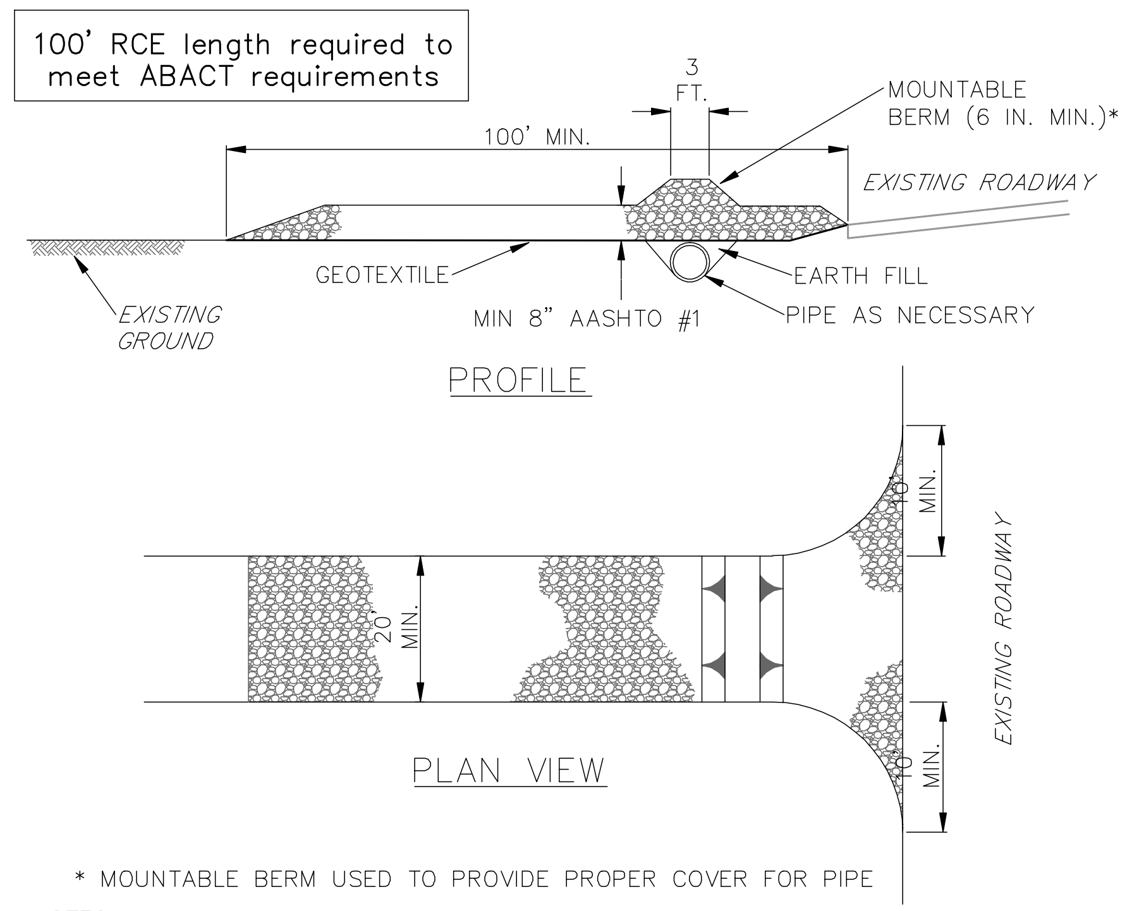
3 FT.
100' MIN.
MOUNTABLE BERM (6 IN. MIN.)*
EXISTING ROADWAY
GEOTEXTILE
EARTH FILL
EXISTING GROUND
MIN 8" AASHTO #1
PIPE AS NECESSARY
PROFILE
10' MIN.
20' MIN.
EXISTING ROADWAY
PLAN VIEW

* MOUNTABLE BERM USED TO PROVIDE PROPER COVER FOR PIPE

NOTES:

REMOVE TOPSOIL PRIOR TO INSTALLATION OF ROCK CONSTRUCTION ENTRANCE. EXTEND ROCK OVER FULL WIDTH OF ENTRANCE.

RUNOFF SHALL BE DIVERTED FROM ROADWAY TO A SUITABLE SEDIMENT REMOVAL BMP PRIOR TO ENTERING ROCK CONSTRUCTION ENTRANCE.

MOUNTABLE BERM SHALL BE INSTALLED WHEREVER OPTIONAL CULVERT PIPE IS USED AND PROPER PIPE COVER AS SPECIFIED BY MANUFACTURER IS NOT OTHERWISE PROVIDED. PIPE SHALL BE SIZED APPROPRIATELY FOR SIZE OF DITCH BEING CROSSED.

MAINTENANCE: ROCK CONSTRUCTION ENTRANCE THICKNESS SHALL BE CONSTANTLY MAINTAINED TO THE SPECIFIED DIMENSIONS BY ADDING ROCK. A STOCKPILE SHALL BE MAINTAINED ON SITE FOR THIS PURPOSE. ALL SEDIMENT DEPOSITED ON PAVED ROADWAYS SHALL BE REMOVED AND RETURNED TO THE CONSTRUCTION SITE IMMEDIATELY. IF EXCESSIVE AMOUNTS OF SEDIMENT ARE BEING DEPOSITED ON ROADWAY, EXTEND LENGTH OF ROCK CONSTRUCTION ENTRANCE BY 50 FOOT INCREMENTS UNTIL CONDITION IS ALLEVIATED OR INSTALL WASH RACK. WASHING THE ROADWAY OR SWEEPING THE DEPOSITS INTO ROADWAY DITCHES, SEWERS, CULVERTS, OR OTHER DRAINAGE COURSES IS NOT ACCEPTABLE.

STANDARD CONSTRUCTION DETAIL #3-1
ROCK CONSTRUCTION ENTRANCE

NOT TO SCALE

Compost Filter Sock to be installed around filter bag (ABACT)

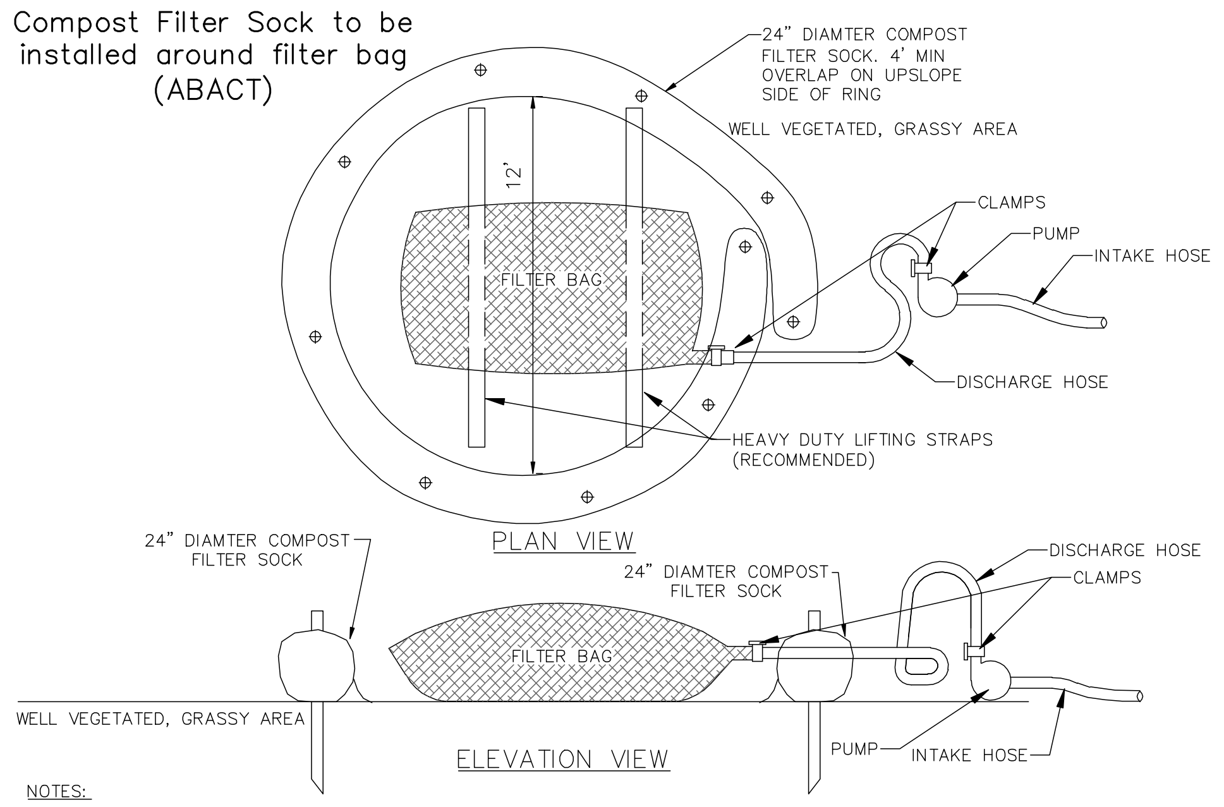
24" DIAMTER COMPOST FILTER SOCK. 4' MIN OVERLAP ON UPSLOPE SIDE OF RING
WELL VEGETATED, GRASSY AREA
12'
FILTER BAG
CLAMPS
PUMP
INTAKE HOSE
DISCHARGE HOSE
HEAVY DUTY LIFTING STRAPS (RECOMMENDED)
PLAN VIEW
24" DIAMTER COMPOST FILTER SOCK
24" DIAMTER COMPOST FILTER SOCK
DISCHARGE HOSE
CLAMPS
FILTER BAG
WELL VEGETATED, GRASSY AREA
ELEVATION VIEW
PUMP
INTAKE HOSE

NOTES:

LOW VOLUME FILTER BAGS SHALL BE MADE FROM NON-WOVEN GEOTEXTILE MATERIAL SEWN WITH HIGH STRENGTH, DOUBLE STITCHED "J" TYPE SEAMS. THEY SHALL BE CAPABLE OF TRAPPING PARTICLES LARGER THAN 150 MICRONS. HIGH VOLUME FILTER BAGS SHALL BE MADE FROM WOVEN GEOTEXTILES THAT MEET THE FOLLOWING STANDARDS:

PROPERTY	TEST METHOD	MINIMUM STANDARD
AVG. WIDE WIDTH STRENGTH	ASTM D-4884	60 LB/IN
GRAB TENSILE	ASTM D-4632	205 LB
PUNCTURE	ASTM D-4833	110 LB
MULLEN BURST	ASTM D-3786	350 PSI
UV RESISTANCE	ASTM D-4355	70%
AOS % RETAINED	ASTM D-4751	80 SIEVE

A SUITABLE MEANS OF ACCESSING THE BAG WITH MACHINERY REQUIRED FOR DISPOSAL PURPOSES SHALL BE PROVIDED. FILTER BAGS SHALL BE REPLACED WHEN THEY BECOME 1/2 FULL OF SEDIMENT. SPARE BAGS SHALL BE KEPT AVAILABLE FOR REPLACEMENT OF THOSE THAT HAVE FAILED OR ARE FILLED. BAGS SHALL BE PLACED ON STRAPS TO FACILITATE REMOVAL UNLESS BAGS COME WITH LIFTING STRAPS ALREADY ATTACHED.

BAGS SHALL BE LOCATED IN WELL-VEGETATED (GRASSY) AREA, AND DISCHARGE ONTO STABLE, EROSION RESISTANT AREAS. WHERE THIS IS NOT POSSIBLE, A GEOTEXTILE UNDERLAYMENT AND FLOW PATH SHALL BE PROVIDED. BAGS MAY BE PLACED ON FILTER STONE TO INCREASE DISCHARGE CAPACITY. BAGS SHALL NOT BE PLACED ON SLOPES GREATER THAN 5%. FOR SLOPES EXCEEDING 5%, CLEAN ROCK OR OTHER NON-ERODIBLE AND NON-POLLUTING MATERIAL MAY BE PLACED UNDER THE BAG TO REDUCE SLOPE STEEPNESS.

NO DOWNSLOPE SEDIMENT BARRIER IS REQUIRED FOR MOST INSTALLATIONS. COMPOST BERM OR COMPOST FILTER SOCK SHALL BE INSTALLED BELOW BAGS LOCATED IN HQ OR EV WATERSHEDS, WITHIN 50 FEET OF ANY RECEIVING SURFACE WATER OR WHERE GRASSY AREA IS NOT AVAILABLE.

THE PUMP DISCHARGE HOSE SHALL BE INSERTED INTO THE BAGS IN THE MANNER SPECIFIED BY THE MANUFACTURER AND SECURELY CLAMPED. A PIECE OF PVC PIPE IS RECOMMENDED FOR THIS PURPOSE.

THE PUMPING RATE SHALL BE NO GREATER THAN 750 GPM OR 1/2 THE MAXIMUM SPECIFIED BY THE MANUFACTURER, WHICHEVER IS LESS. PUMP INTAKES SHALL BE FLOATING AND SCREENED.

FILTER BAGS SHALL BE INSPECTED DAILY. IF ANY PROBLEM IS DETECTED, PUMPING SHALL CEASE IMMEDIATELY AND NOT RESUME UNTIL THE PROBLEM IS CORRECTED.

PUMPED WATER FILTER BAG WITH COMPOST FILTER SOCK

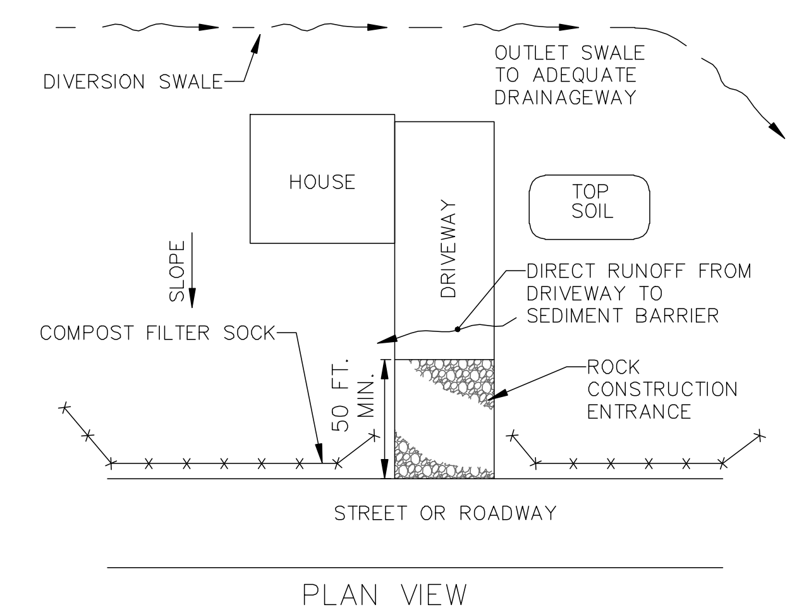
DIVERSION SWALE
OUTLET SWALE TO ADEQUATE DRAINAGEWAY
HOUSE
DRIVEWAY
TOP SOIL
SLOPE
DIRECT RUNOFF FROM DRIVEWAY TO SEDIMENT BARRIER
COMPOST FILTER SOCK
50 FT. MIN.
ROCK CONSTRUCTION ENTRANCE
STREET OR ROADWAY
PLAN VIEW

NOTES:
THE UPSLOPE DIVERSION CHANNEL SHOULD BE INSTALLED WHEREVER THE LOT EXTENDS MORE THAN 150 FEET ABOVE THE ROADWAY OR WHERE RUNOFF FORM AREAS ABOVE THE LOT IS NOT OTHERWISE DIVERTED AWAY FROM THE LOT. THE CHANNEL SHOULD BE PROPERLY SIZED AND PROVIDED WITH A SUITABLE PROTECTIVE LINING. THE DESIGNER AND/OR CONTRACTOR MUST EXERCISE CAUTION TO PROTECT ALL DOWNSTREAM PROPERTY OWNERS WHEN SELECTING A DISCHARGE POINT FOR THIS CHANNEL.

STANDARD CONSTRUCTION DETAIL #10-1
TYPICAL ON-LOT BMPs FOR LOT ABOVE ROADWAY

NOT TO SCALE

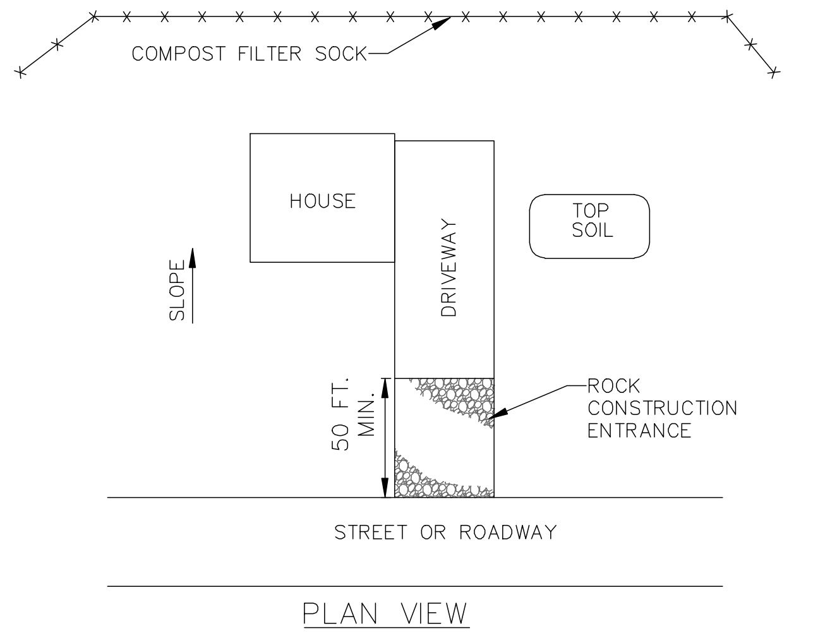
COMPOST FILTER SOCK
HOUSE
DRIVEWAY
TOP SOIL
SLOPE
50 FT. MIN.
ROCK CONSTRUCTION ENTRANCE
STREET OR ROADWAY
PLAN VIEW

NOTES:

THE AREA DOWNSLOPE OF THE COMPOST SOCK BARRIER MAY NOT BE UNDER DEVELOPMENT OR OTHERWISE DISTURBED.

STANDARD CONSTRUCTION DETAIL #10-2
TYPICAL ON-LOT BMPs FOR LOT BELOW ROADWAY

NOT TO SCALE

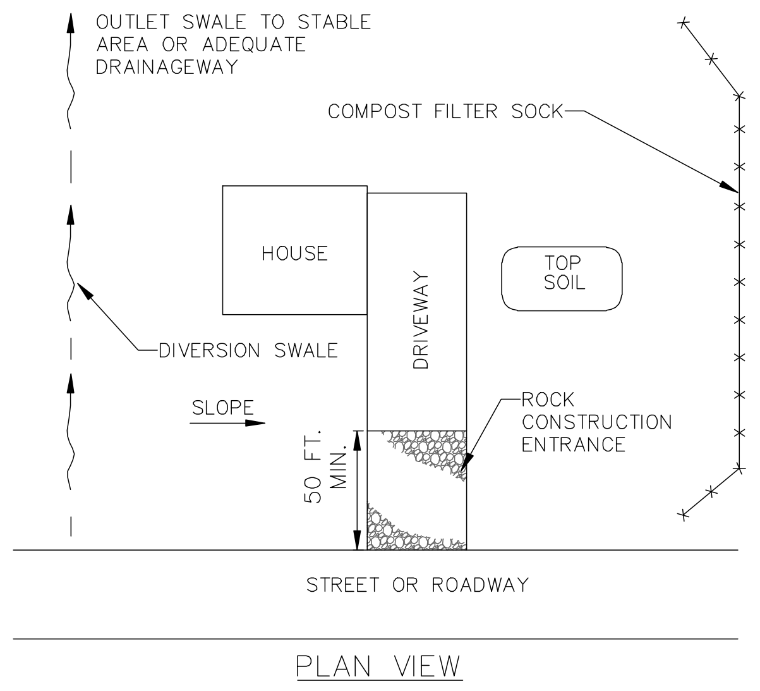
OUTLET SWALE TO STABLE AREA OR ADEQUATE DRAINAGEWAY
COMPOST FILTER SOCK
HOUSE
DRIVEWAY
TOP SOIL
DIVERSION SWALE
SLOPE
50 FT. MIN.
ROCK CONSTRUCTION ENTRANCE
STREET OR ROADWAY
PLAN VIEW

NOTES:

THE AREA DOWNSLOPE OF THE COMPOST SOCK BARRIER MAY NOT BE UNDER DEVELOPMENT OR OTHERWISE DISTURBED.

THE UPSLOPE DIVERSION CHANNEL SHOULD BE INSTALLED WHEREVER RUNOFF FROM AREAS ABOVE THE LOT ARE NOT OTHERWISE DIVERTED AWAY FROM THE LOT. THE CHANNEL SHOULD BE PROPERLY SIZED AND PROVIDED WITH A SUITABLE PROTECTIVE LINING. THE DESIGNER AND/OR CONTRACTOR MUST EXERCISE CAUTION TO PROTECT ALL DOWNSTREAM PROPERTY OWNERS WHEN SELECTING A DISCHARGE POINT FOR THIS CHANNEL.

IN AREAS WHERE SLOPE IS AT AN OBLIQUE ANGLE TO THE ROADWAY, BMPS SHALL BE ADJUSTED ACCORDINGLY.

DIVERSION CHANNEL MAY OUTLET TO ROADSIDE DITCH OR STORM SEWER SYSTEM, BUT NOT ONTO STREET OR ROADWAY.

STANDARD CONSTRUCTION DETAIL #10-3
TYPICAL ON-LOT BMPs FOR LOT ALONG ASCENDING OR DESCENDING ROADWAY

NOT TO SCALE

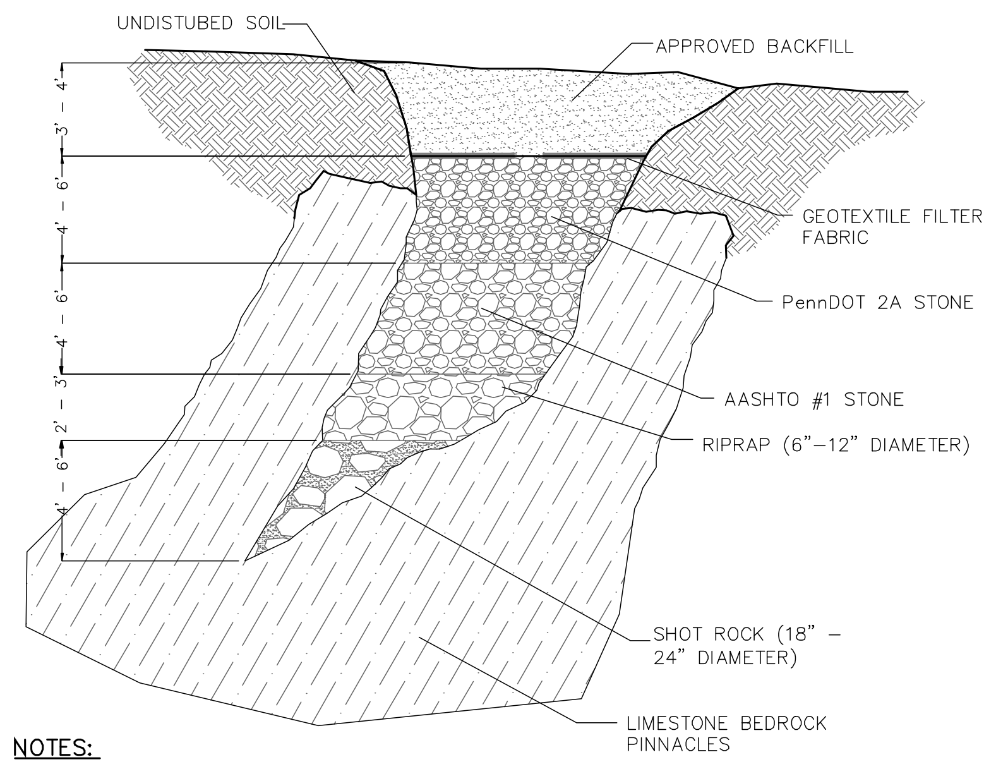
UNDISTUBED SOIL
APPROVED BACKFILL
3' - 4'
4' - 6'
4' - 6'
2' - 3'
4' - 6'
GEOTEXTILE FILTER FABRIC
PennDOT 2A STONE
AASHTO #1 STONE
RIPRAP (6"-12" DIAMETER)
SHOT ROCK (18" - 24" DIAMETER)
LIMESTONE BEDROCK PINNACLES

NOTES:

1. THIS DETAIL IS A GENERAL REPAIR MEASURE FOR SINKHOLES. ALL ROCK SIZES AND DEPTHS ARE SUBJECT TO THE SIZE AND CONDITIONS OF THE SPECIFIC SINKHOLE. AS SUCH THE EXACT REPAIR FOR EACH SINKOLE ENCOUNTERED SHALL BE PER THE RECOMMENEDATION OF A GEOTECHNICAL ENGINEER. CONTRACTOR MUST COORDINATE WITH A GEOTECHNICAL ENGINEER TO OBTAIN INSTRUCTIONS ON PROPER REPAIR MEASURES TO IMPLEMENT.
2. REASONABLE EFFORTS SHOULD BE MADE TO EXCAVATE ALL LOOSE AND UNSTABLE SOILS FROM THE BASE OF THE SINKHOLE (I.E. THROAT)
3. FLOWABLE FILL,IF USED,SHOULD BE ALLOWED TO CURE FOR A MINIMUM OF 24 HOURS PRIOR TO THE PLACEMENT OF THE FOLLOWING LAYERS WITHIN THE INVERTED FILTER.
4. THE FINAL LAYER OF STRUCTURAL FILL SHOULD BE PLACED IN LOOSE 12" LIFTS AND COMPACTED TO A MINIMUM OF 95% OF THE SOIL'S MAXIMUM MODIFIED DRY DENSITY.
5. INSTALLATION OF THE INVERTED FILTER SHOULD BE COMPLETED UNDER THE DIRECTION OF THE GEOTECHNICAL ENGINEER..

The repairs outlined above are general guidelines and each sinkhole occurrence should thoroughly be reviewed by the Geotechnical Engineer of Record for an appropriate remediation plan.

INVERTED FILTER SINKHOLE REPAIR DETAIL

NO SCALE

For consistency the details shown on this plan include BMPs associated with all Phases as approved with the CCCD NPDES review process. See specific added references for Phase V BMPs.

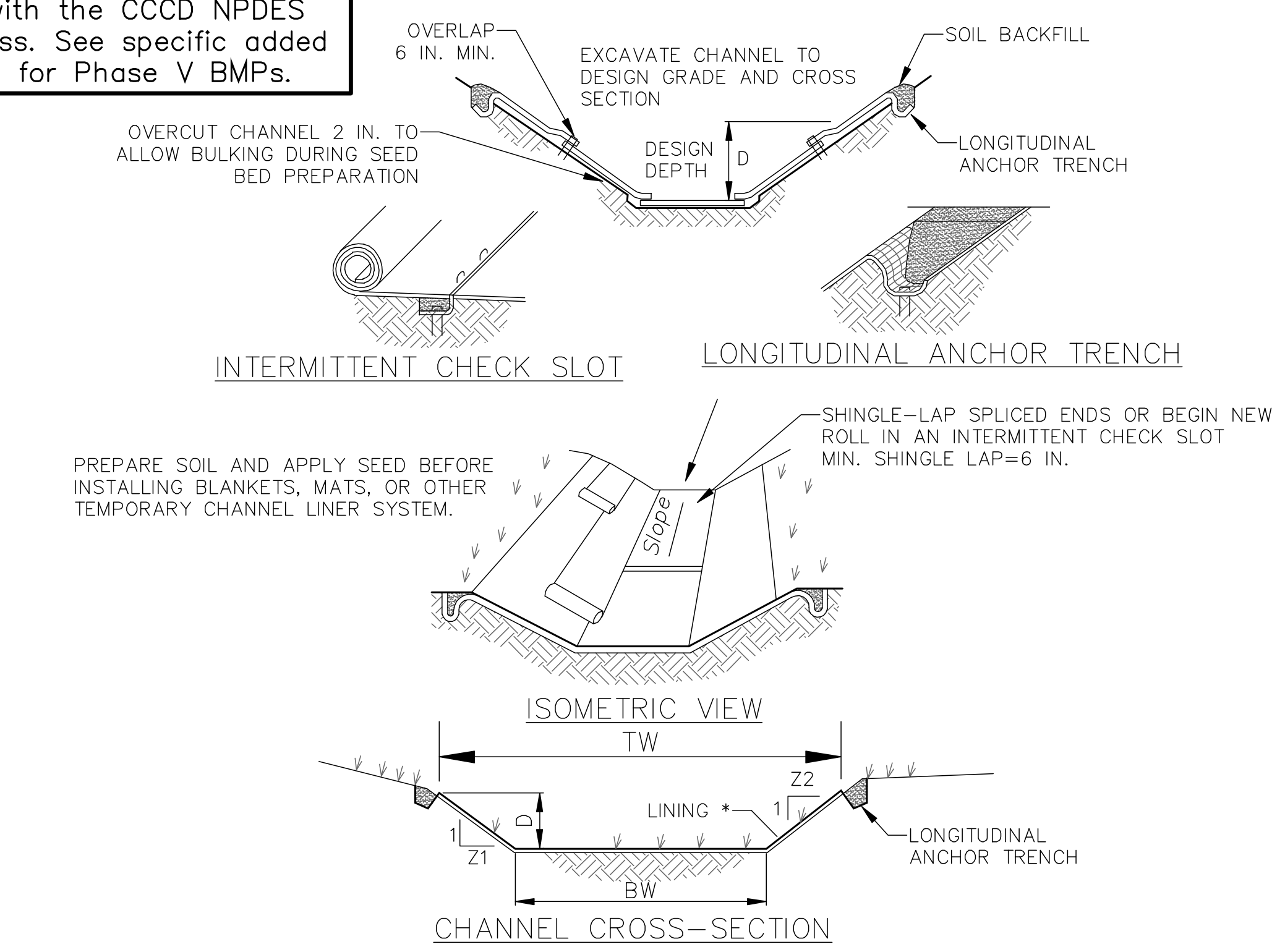
OVERLAP 6 IN. MIN.
EXCAVATE CHANNEL TO DESIGN GRADE AND CROSS SECTION
SOIL BACKFILL
OVERCUT CHANNEL 2 IN. TO ALLOW BULKING DURING SEED BED PREPARATION
DESIGN DEPTH
D
LONGITUDINAL ANCHOR TRENCH
INTERMITTENT CHECK SLOT
LONGITUDINAL ANCHOR TRENCH
PREPARE SOIL AND APPLY SEED BEFORE INSTALLING BLANKETS, MATS, OR OTHER TEMPORARY CHANNEL LINER SYSTEM.
SHINGLE-LAP SPLICED ENDS OR BEGIN NEW ROLL IN AN INTERMITTENT CHECK SLOT MIN. SHINGLE LAP=6 IN.
Slope
ISOMETRIC VIEW
TW
Z2
LINING *
1
D
1
Z1
BW
LONGITUDINAL ANCHOR TRENCH
CHANNEL CROSS-SECTION

* SEE MANUFACTURER'S LINING INSTALLATION DETAIL FOR STAPLE PATTERNS, VEGETATIVE STABILIZATION FOR SOIL AMENDMENTS, SEED MIXTURES AND MULCHING INFORMATION

	SWALE DESIGNATION	CHANNEL SLOPE (%)	Z1	Z2	BW (FT.)	D (MIN.) (FT.)	TW (MIN.) (FT.)	TEMPORARY LINING	PERMANENT LINING
Stage 1 (Phase II)	P1	8	3	3	4	1.1	10.6	N.A.G. C350	N.A.G. C350/CLASS D VEG.
	P2	2	3	3	3	2.0	15.0	N.A.G. SC250	N.A.G. SC250/CLASS D VEG.
	P2a	20	3	3	10	1.1	16.6	N.A.G. P300	N.A.G. P300/CLASS C VEG.
	P3	10	3	3	4	1.2	11.2	N.A.G. P550	N.A.G. P550/CLASS D VEG.
	P4	10	3	3	2	1.5	11	N.A.G. C350	N.A.G. C350/CLASS D VEG.
	*Ex. Hertzler	4	3	3	2	1.2	9.2	N.A.G. SC250	N.A.G. SC250/CLASS D VEG.
	**T1	4	3	3	4	1.2	11.2	N.A.G. P300	N.A.G. P300/CLASS D VEG.
Stage 2 (Phase V)	P6	1.5	3	3	2	1.5	11	N.A.G. SC250	N.A.G. SC250/CLASS D VEG.
	P7a	1.5	3	3	4	2.5	19	N.A.G. SC250	N.A.G. SC250/CLASS D VEG.
	P7b	1.5	3	3	4	2.5	19	N.A.G. SC250	N.A.G. SC250/CLASS D VEG.
	P8	1-4	3	3	2	1.5	11	N.A.G. SC250	N.A.G. SC250/CLASS D VEG.
	P10	2.5	3	3	2	1.2	9.2	N.A.G. SC250	N.A.G. SC250/CLASS D VEG.
	P11	1.0	3	3	2	1.5	11	N.A.G. SC250	N.A.G. SC250/CLASS D VEG.
	P5	3.3	3	3	2	1.1	8.6	N.A.G. SC250	N.A.G. SC250/CLASS D VEG.
Stage 3 (Remaining Phases)	P9	1.2	3	3	2	1.0	8	N.A.G. SC250	N.A.G. SC250/CLASS D VEG.
	P12	1.5	3	3	2	1.5	11	N.A.G. SC250	N.A.G. SC250/CLASS D VEG.
	P13	1.2	3	3	2	1.5	11	N.A.G. SC250	N.A.G. SC250/CLASS D VEG.
	P14	1.4	3	3	2	1.5	11	N.A.G. SC250	N.A.G. SC250/CLASS D VEG.
	P15	11	3	3	2	1	8	N.A.G. SC250	N.A.G. SC250/CLASS D VEG.
	P16	1.2	3	3	2	1.5	11	N.A.G. SC250	N.A.G. SC250/CLASS D VEG.
	P17	2	3	3	2	1.2	9.2	N.A.G. SC250	N.A.G. SC250/CLASS D VEG.

* Hertzler Road swale exist although data provided for reconstruction if needed in future.
** Temporary swale T1 shall receive swale P3 runoff until future phase construction
N.A.G. SC250 is a permanent vegetative lined; North American Green Product

NOTES:
ANCHOR TRENCHES SHALL BE INSTALLED AT BEGINNING AND END OF CHANNEL IN THE SAME MANNER AS LONGITUDINAL ANCHOR TRENCHES. CHANNEL DIMENSIONS SHALL BE CONSTANTLY MAINTAINED.

CHANNEL SHALL BE CLEANED WHENEVER TOTAL CHANNEL DEPTH IS REDUCED BY 25% AT ANY LOCATION. SEDIMENT DEPOSITS SHALL BE REMOVED WITHIN 24 HOURS OF DISCOVERY OR AS SOON AS SOIL CONDITIONS PERMIT ACCESS TO CHANNEL WITHOUT FURTHER DAMAGE. DAMAGED LINING SHALL BE REPAIRED OR REPLACED WITHIN 48 HOURS OF DISCOVERY.

NO MORE THAN ONE THIRD OF THE SHOOT (GRASS LEAF) SHALL BE REMOVED IN ANY MOWING. GRASS HEIGHT SHALL BE MAINTAINED BETWEEN 2 AND 3 INCHES UNLESS OTHERWISE SPECIFIED. EXCESS VEGETATION SHALL BE REMOVED FROM PERMANENT CHANNELS TO ENSURE SUFFICIENT CHANNEL CAPACITY.

STANDARD CONSTRUCTION DETAIL #6-1
VEGETATED CHANNEL

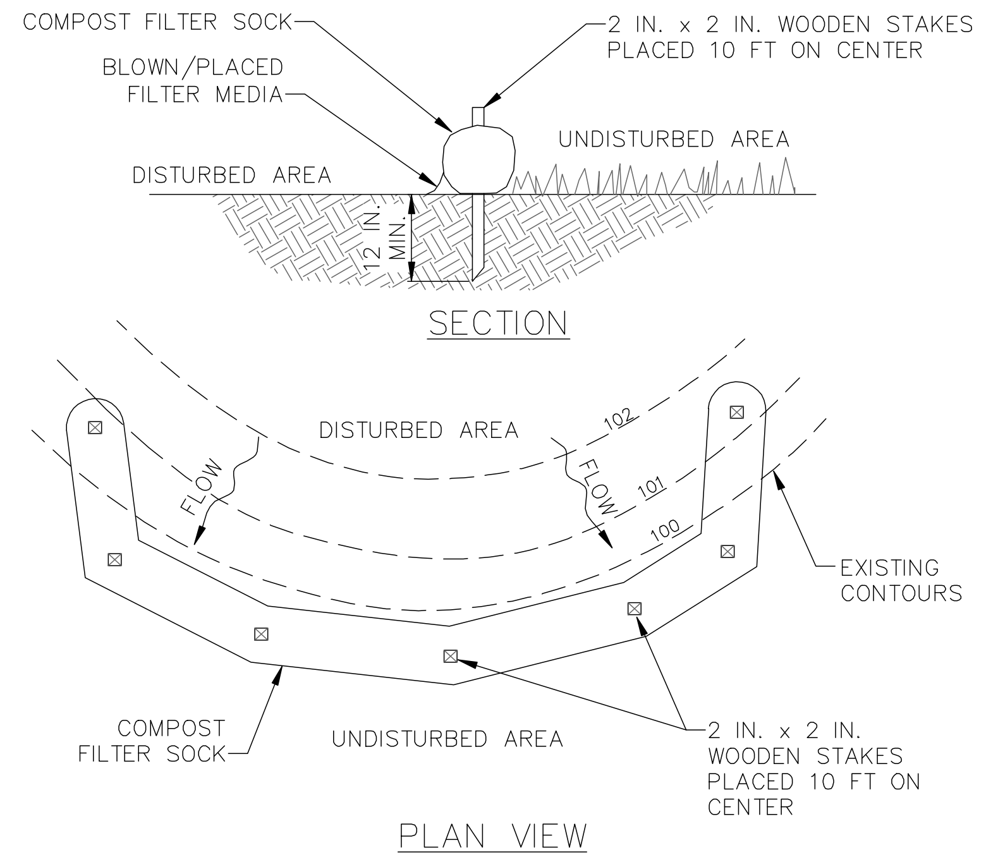
COMPOST FILTER SOCK
BLOWN/PLACED FILTER MEDIA
2 IN. x 2 IN. WOODEN STAKES PLACED 10 FT ON CENTER
UNDISTURBED AREA
DISTURBED AREA
12 IN. MIN.
SECTION
DISTURBED AREA
FLOW
FLOW
102
101
100
EXISTING CONTOURS
COMPOST FILTER SOCK
UNDISTURBED AREA
2 IN. x 2 IN. WOODEN STAKES PLACED 10 FT ON CENTER
PLAN VIEW

NOTES:
SOCK FABRIC SHALL MEET STANDARDS OF TABLE 4.1 OF THE PA DEP EROSION CONTROL MANUAL. COMPOST SHALL MEET THE STANDARDS OF TABLE 4.2 OF THE PA DEP EROSION CONTROL MANUAL.
COMPOST FILTER SOCK SHALL BE PLACED AT EXISTING LEVEL GRADE. BOTH ENDS OF THE BARRIER SHALL BE EXTENDED AT LEAST 8 FEET UP SLOPE AT 45 DEGREES TO THE MAIN BARRIER ALIGNMENT. MAXIMUM SLOPE LENGTH ABOVE ANY BARRIER SHALL NOT EXCEED THAT SPECIFIED FOR THE SIZE OF THE SOCK AND THE SLOPE OF ITS TRIBUTARY AREA.
TRAFFIC SHALL NOT BE PERMITTED TO CROSS COMPOST FILTER SOCKS.
ACCUMULATED SEDIMENT SHALL BE REMOVED WHEN IT REACHES 1/2 THE ABOVE GROUND HEIGHT OF THE BARRIER AND DISPOSED IN THE MANNER DESCRIBED ELSEWHERE IN THE PLAN.
COMPOST FILTER SOCKS SHALL BE INSPECTED WEEKLY AND AFTER EACH RUNOFF EVENT. DAMAGED SOCKS SHALL BE REPAIRED ACCORDING TO MANUFACTURER'S SPECIFICATIONS OR REPLACED WITHIN 24 HOURS OF INSPECTION.
BIODEGRADABLE COMPOST FILTER SOCKS SHALL BE REPLACED AFTER 6 MONTHS; PHOTODEGRADABLE SOCKS AFTER 1 YEAR. POLYPROPYLENE SOCKS SHALL BE REPLACED ACCORDING TO MANUFACTURER'S RECOMMENDATIONS.
UPON STABILIZATION OF THE AREA TRIBUTARY TO THE SOCK, STAKES SHALL BE REMOVED. THE SOCK MAY BE LEFT IN PLACE AND VEGETATED OR REMOVED. IN THE LATTER CASE, THE MESH SHALL BE CUT OPEN AND THE MULCH SPREAD AS A SOIL SUPPLEMENT.

STANDARD CONSTRUCTION DETAIL #4-1
COMPOST FILTER SOCK

NOT TO SCALE

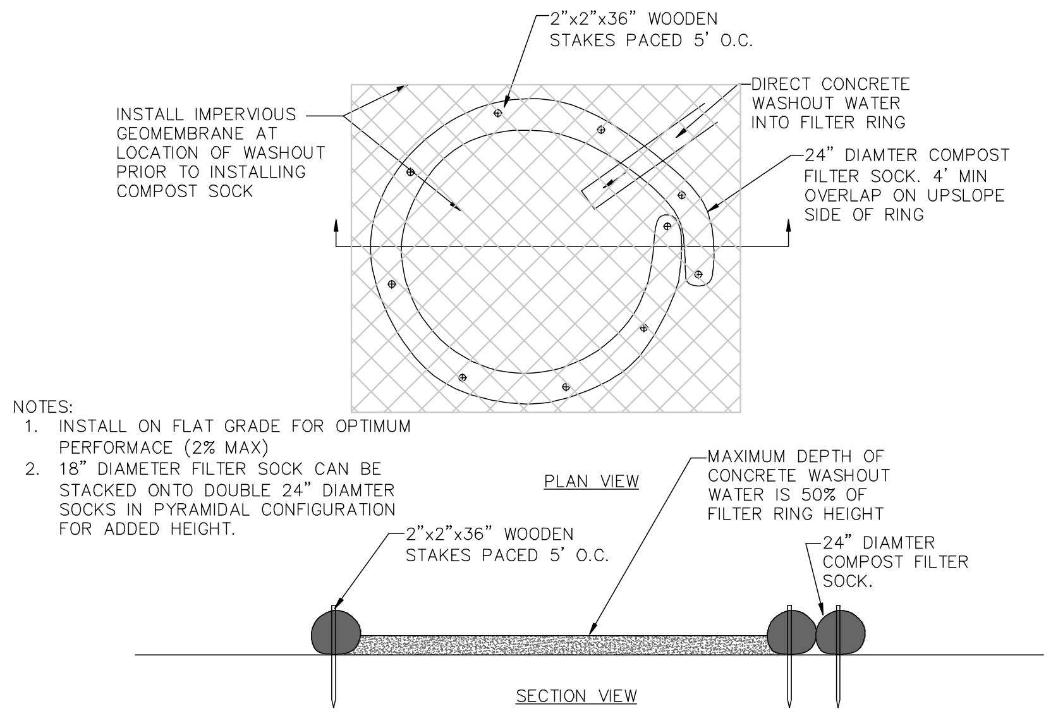
2"x2"x36" WOODEN STAKES PACED 5' O.C.
INSTALL IMPERVIOUS GEOMEMBRANE AT LOCATION OF WASHOUT PRIOR TO INSTALLING COMPOST SOCK
DIRECT CONCRETE WASHOUT WATER INTO FILTER RING
24" DIAMTER COMPOST FILTER SOCK. 4' MIN OVERLAP ON UPSLOPE SIDE OF RING
PLAN VIEW
MAXIMUM DEPTH OF CONCRETE WASHOUT WATER IS 50% OF FILTER RING HEIGHT
2"x2"x36" WOODEN STAKES PACED 5' O.C.
24" DIAMTER COMPOST FILTER SOCK.
SECTION VIEW

NOTES:
1. INSTALL ON FLAT GRADE FOR OPTIMUM PERFORMACE (2% MAX)
2. 18" DIAMETER FILTER SOCK CAN BE STACKED ONTO DOUBLE 24" DIAMTER SOCKS IN PYRAMIDAL CONFIGURATION FOR ADDED HEIGHT.

A suitable concrete washout facility must be provided for the cleaning of chutes, mixers, and hoppers of the delivery vehicles unless such a facility will be used at the source of the concrete. Under no circumstances may wash water from these vehicles be allowed to enter any surface waters. Make sure that proper signage is provided to drivers so that they are aware of the presence of washout facilities.

Washout facilities should not be placed within 50 feet of storm drains, open ditches or surface waters. They should be in a convenient location for the trucks, preferably near the place where the concrete is being poured, but far enough from other vehicular traffic to minimize the potential for accidental damage or spills. Wherever possible, they should be located on slopes not exceeding a 2% grade.

Compost Sock Washout
Wherever compost sock washouts are used, a suitable impervious geomembrane should be placed at the location of the washout. Compost socks should be staked in the manner recommended by the manufacturer around perimeter of the geomembrane so as to form a ring with the ends of the sock located at the upslope corner (See Detail). Care should be taken to ensure continuous contact of the sock with the geomembrane at all locations. Where necessary, socks may be stacked and staked so as to form a triangular cross-section.

CONCRETE WASHOUT DETAIL

NOT TO SCALE

For consistency the details shown on this plan include BMPs associated with all Phases as approved with the CCCD NPDES review process. The Phase V riprap aprons included A32, A34, B8 and B39. Riprap apron J1 is also located in Phase V (Basin 5 discharge) although was previously installed with trail installation.

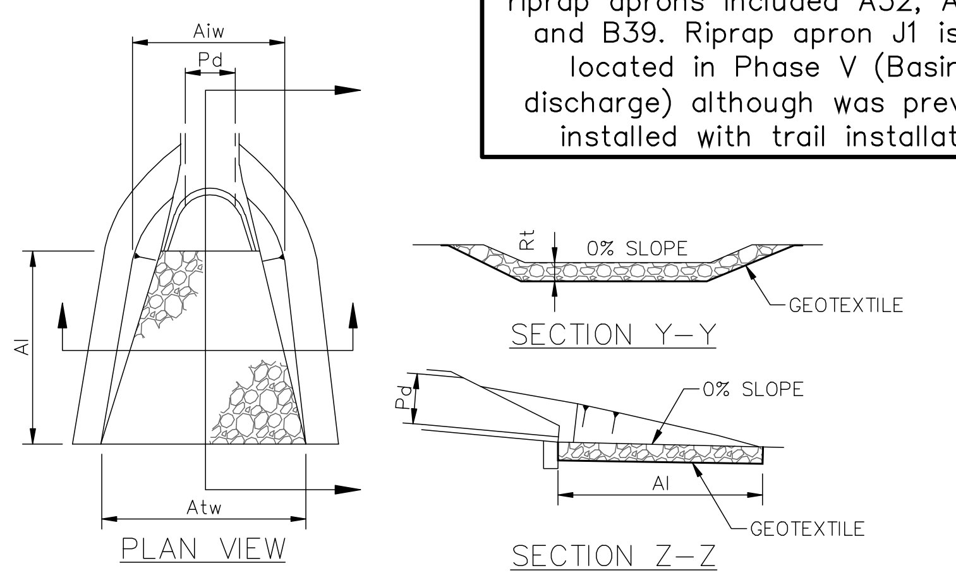
Aiw
Pd
Al
Atw
PLAN VIEW
Rt
0% SLOPE
GEOTEXTILE
SECTION Y-Y
Pd
0% SLOPE
Al
GEOTEXTILE
SECTION Z-Z

Outlet No.	Pipe Dia. Do (in)	Tail Water Condition (Max/Min)	Man. "n" For Pipe	Pipe Slope (%)	*Q (cfs)	**V (fps)	Riprap Size	Rt (in)	Al (ft)	Aiw (ft)	Atw (ft)
A1	30	Min	0.012	2.50	41.5	9.2	R-5	27	23	7.5	30.5
A10	24	Min	0.012	2.00	32.4	11.2	R-5	27	16	6	22
***A27	42	Min	0.012	1.00	57	11.3	R-5	27	22	10.5	32.5
A25	18	Min	0.012	1.00	7.3	8.0	R-4	18	8	4.5	12.5
A32	18	Min	0.012	0.83	6.2	6.1	R-4	18	8	4.5	12.5
A34	36	Min	0.012	1.00	39.5	8.4	R-5	27	20	9	29
A51	18	Min	0.012	2.50	12.9	8.4	R-4	18	12	4.5	16.5
******6	24	Min	0.012	1.43	10.0	8.4	R-4	18	12	6	18
****F1	36	Min	0.012	1.00	47	10.9	R-5	27	20	9	29
****J1	30	Min	0.012	1.00	37	10.1	R-5	27	16	7.5	23.5
B1	24	Min	0.012	3.67	25.4	8.4	R-5	27	16	6	22
B8	36	Min	0.012	0.90	58.3	9.5	R-5	27	21	9	30
B39	15	Min	0.012	2.56	4.6	6.9	R-4	18	8	3.75	11.75
C1	24	Min	0.012	3.08	33.7	10.4	R-5	27	20	6	26

* 100 Year storm event
** The anticipated velocity (V) should not exceed the maximum permissible shown in Table 6.6 for the proposed riprap protection. Adjust for less than full pipe flow. Use Manning's equation to calculate velocity for pipe slopes > 0.05 ft/ft.
***A27 apron includes flow from A29 as well; discharge to same conservatively designed apron.
***** F1 & J1 aprons exist. Original design reflected above; now received reduced basin discharges.
Designs for future phase "B & C" systems shall be provided with future phase submission.
******6 – Basin 6 discharge was conservatively assumed to be 10 cfs while actual is less.
All pipe end treatments shall be Concrete End Wall (RC-31M)

NOTES:

ALL APRONS SHALL BE CONSTRUCTED TO THE DIMENSIONS SHOWN. TERMINAL WIDTHS SHALL BE ADJUSTED AS NECESSARY TO MATCH RECEIVING CHANNELS.

ALL APRONS SHALL BE INSPECTED AT LEAST WEEKLY AND AFTER EACH RUNOFF EVENT. DISPLACED RIPRAP WITHIN THE APRON SHALL BE REPLACED IMMEDIATELY.

STANDARD CONSTRUCTION DETAIL #9-1
RIPRAP APRON AT PIPE OUTLET
WITH FLARED END SECTION OR ENDWALL

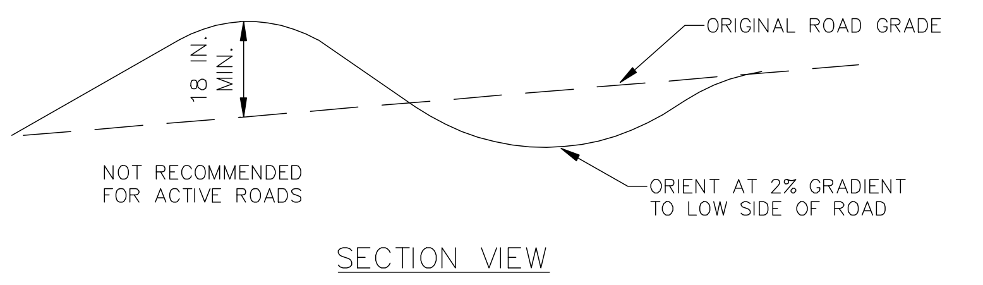
ORIGINAL ROAD GRADE
18 IN. MIN.
NOT RECOMMENDED FOR ACTIVE ROADS
ORIENT AT 2% GRADIENT TO LOW SIDE OF ROAD
SECTION VIEW

NOTES:

WATERBARS SHALL DISCHARGE TO A STABLE AREA.

WATERBARS SHALL BE INSPECTED WEEKLY (DAILY ON ACTIVE ROADS) AND AFTER EACH RUNOFF EVENT. DAMAGED OR ERODED WATERBARS SHALL BE RESTORED TO ORIGINAL DIMENSIONS WITHIN 24 HOURS OF INSPECTION.

MAINTENANCE OF WATERBARS SHALL BE PROVIDED UNTIL ROADWAY, SKIDTRAIL, OR RIGHT-OF-WAY HAS ACHIEVED PERMANENT STABILIZATION.

WATERBARS ON RETIRED ROADWAYS, SKIDTRAILS, AND RIGHT-OF-WAYS SHALL BE LEFT IN PLACE AFTER PERMANENT STABILIZATION HAS BEEN ACHIEVED.

SEE PA DEP EROSION CONTROL MANUAL TABLE 3.1 FOR WATERBAR SPACING.

STANDARD CONSTRUCTION DETAIL #3-5
WATERBAR

NOT TO SCALE

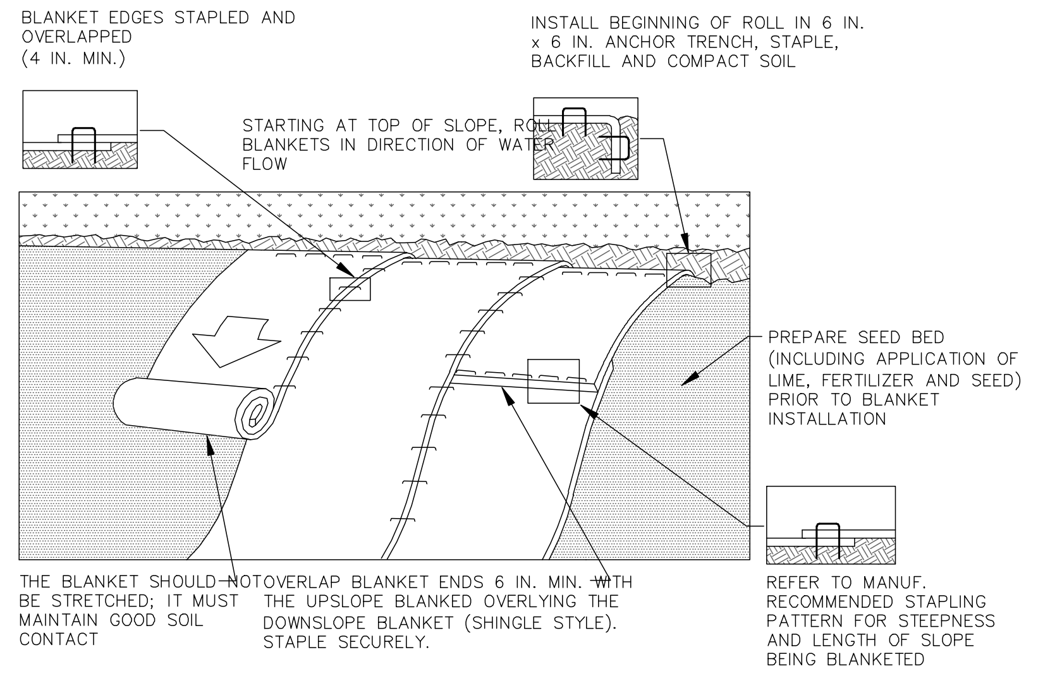
BLANKET EDGES STAPLED AND OVERLAPPED (4 IN. MIN.)
INSTALL BEGINNING OF ROLL IN 6 IN. x 6 IN. ANCHOR TRENCH, STAPLE, BACKFILL AND COMPACT SOIL
STARTING AT TOP OF SLOPE, ROLL BLANKETS IN DIRECTION OF WATER FLOW
PREPARE SEED BED (INCLUDING APPLICATION OF LIME, FERTILIZER AND SEED) PRIOR TO BLANKET INSTALLATION
THE BLANKET SHOULD NOT BE STRETCHED; IT MUST MAINTAIN GOOD SOIL CONTACT
OVERLAP BLANKET ENDS 6 IN. MIN. WITH THE UPSLOPE BLANKED OVERLYING THE DOWNSLOPE BLANKET (SHINGLE STYLE). STAPLE SECURELY.
REFER TO MANUF. RECOMMENDED STAPLING PATTERN FOR STEEPNESS AND LENGTH OF SLOPE BEING BLANKETED

NOTES:

1. SEED AND SOIL AMENDMENTS SHALL BE APPLIED ACCORDING TO THE RATES IN THE PLAN DRAWINGS PRIOR TO INSTALLING THE BLANKET.
2. PROVIDE ANCHOR TRENCH AT TOE OF SLOPE IN SIMILAR FASHION AS AT TOP OF SLOPE.
3. SLOPE SURFACE SHALL BE FREE OF ROCKS, CLODS, STICKS, AND GRASS.
4. BLANKET SHALL HAVE GOOD CONTINUOUS CONTACT WITH UNDERLYING SOIL THROUGHOUT ENTIRE LENGTH. LAY BLANKET LOOSELY AND STAKE OR STAPLE TO MAINTAIN DIRECT CONTACT WITH SOIL. DO NOT STRETCH BLANKET.
5. THE BLANKET SHALL BE STAPLED IN ACCORDANCE WITH THE MANUFACTURER'S RECOMMENDATIONS.
6. BLANKETED AREAS SHALL BE INSPECTED WEEKLY AND AFTER EACH RUNOFF EVENT UNTIL PERENNIAL VEGETATION IS ESTABLISHED TO A MINIMUM UNIFORM 70% COVERAGE THROUGHOUT THE BLANKETED AREA. DAMAGED OR DISPLACED BLANKETS SHALL BE RESTORED OR REPLACED WITHIN 4 CALENDAR DAYS.

STANDARD CONSTRUCTION DETAIL #11-1
EROSION CONTROL BLANKET INSTALLATION

NOT TO SCALE

ES3

EROSION AND SEDIMENTATION CONTROL PLAN
FOR
AUTUMN CHASE PRD - PHASE V
Land Developer: Hertzler Road Associates, L.P.
UPPER ALLEN TOWNSHIP CUMBERLAND COUNTY PENNSYLVANIA

MELLOTT ENGINEERING, INC.
Civil Engineering • Land Planning & Development • Water Resources
7500 Devonshire Heights Road • Hummelstown, PA 17036
mellotteng@comcast.net
717-566-6533

REVISIONS
1.
2.
3.
4.
5.
6.
7.
8.
9.

DATE

M:\Drawings\2022\202236 Autumn Chase V\202236 DTL-ES.dwg 1/26/2023 1:02:29 PM EST

Project No. 202236
Date February 1, 2023

Sheet No. ES3

20 of 21

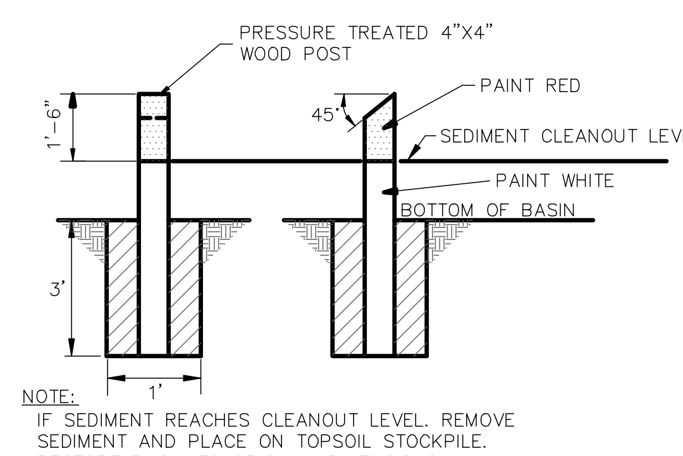

NOTE:
IF SEDIMENT REACHES CLEANOUT LEVEL, REMOVE SEDIMENT AND PLACE ON TOPSOIL STOCKPILE. RESTORE BASIN TO ORIGINAL DIMENSIONS.

SEDIMENT CLEANOUT STAKE DETAIL

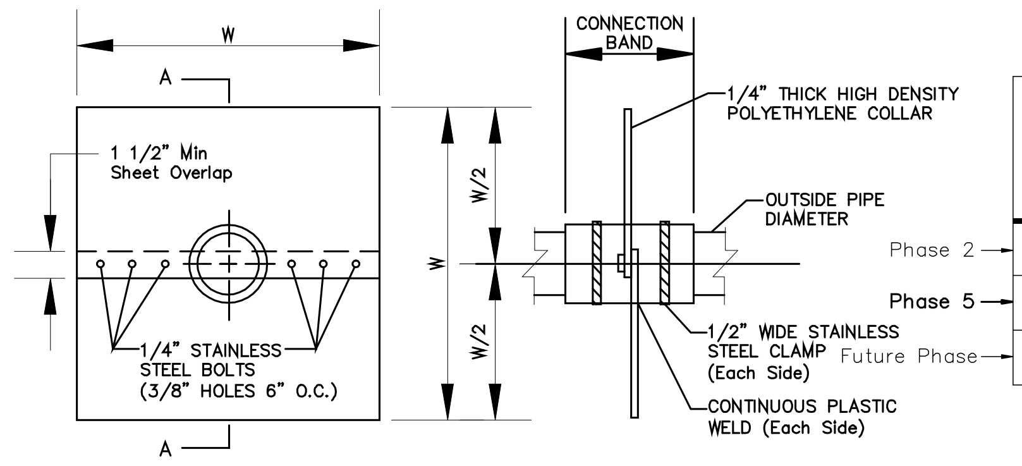
W
A
CONNECTION BAND
1 1/2" Min Sheet Overlap
1/4" THICK HIGH DENSITY POLYETHYLENE COLLAR
OUTSIDE PIPE DIAMETER
W/2
1/4" STAINLESS STEEL BOLTS (3/8" HOLES 6" O.C.)
1/2" WIDE STAINLESS STEEL CLAMP (Each Side)
CONTINUOUS PLASTIC WELD (Each Side)

INSTALLATION INSTRUCTIONS:
APPLY TAR OR MASTIC TO COLLAR AND LAY PIPE ON COLLAR. APPLY MASTIC TO TOP HALF OF COLLAR AND SET IN PLACE LINING UP RED STRIPES AND BOLT TWO HALVES TOGETHER. INSTALL METAL BANDS ON SPLIT HALVES OF COLLAR. TIGHTEN BOLTS AND BANDS. APPLY MASTIC AS NEEDED TO INSURE GOOD WATERTIGHT SEAL. BACKFILL AND TAMP ACCORDINGLY. ABOVE PRODUCT CAN BE PURCHASED FROM SCHEIB PRODUCTS (660-446-2343); EQUIVALENT PRODUCT CAN BE USED.

	BASIN OUTLET	# COLLARS	W (ft)
Stage 1 (Phase II)	4A	3	6
Stage 1 (Phase II)	4B	2	5
Stage 2 (Phase 5)	5	2	6
Stage 3	6	2	5

Basin 4B collar design is shown for reference although;
Basin 4B is not a sediment control facility

GENERAL NOTES
1. INSTALL COLLARS ON BOTH SIDES OF EMBANKMENT CORE..
2. ANTI-SEEP COLLAR AND CONNECTION TO THE PIPE (BARREL) MUST BE WATERTIGHT.
3. COLLARS SHOULD NOT BE LOCATED CLOSER THAN 2 FEET TO A PIPE JOINT.

ANTI-SEEP COLLAR DETAIL

N.T.S.

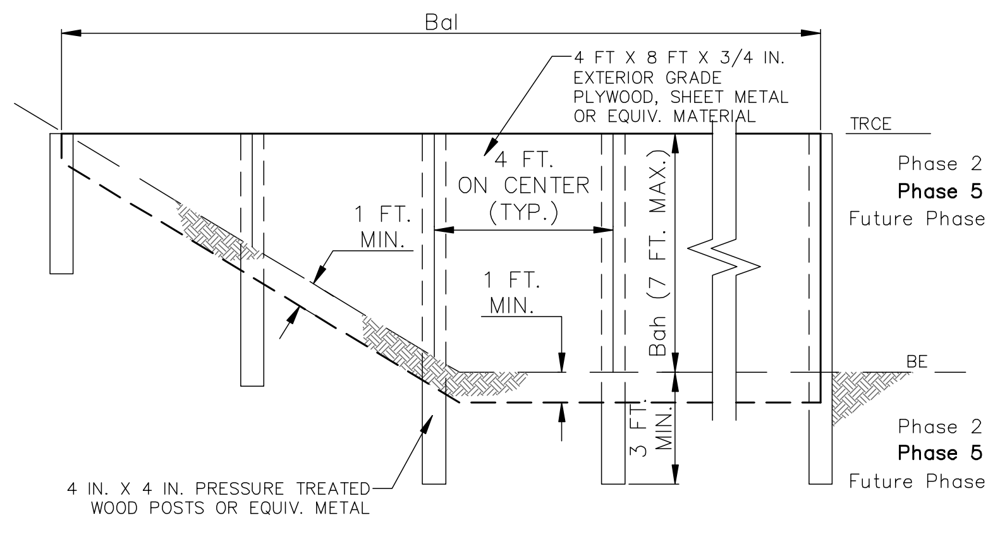
Bal
4 FT X 8 FT X 3/4 IN. EXTERIOR GRADE PLYWOOD, SHEET METAL OR EQUIV. MATERIAL
TRCE
4 FT. ON CENTER (TYP.)
1 FT. MIN.
1 FT. MIN.
Bah (7 FT. MAX.)
3 FT. MIN.
BE
4 IN. X 4 IN. PRESSURE TREATED WOOD POSTS OR EQUIV. METAL

	BASIN OR TRAP NO.	BAFFLE LENGTH Bal (FT)	BAFFLE HEIGHT Bah (FT)	OUTLET CREST ELEV. TRCE (FT)	BOTTOM BOTTOM ELEV BE (FT)
Phase 2	4A	140 140	7.7 7.7	465.2	457.5
Phase 5	5	110	3	466.0	463.0
Future Phase	6	125 135	3 3	482.0	479.0

NOTES:

SEE APPROPRIATE BASIN DETAIL FOR PROPER LOCATION AND ORIENTATION.

AN ACCEPTABLE ALTERNATIVE IS TO INSTALL A SUPER SILT FENCE AT THE BAFFLE LOCATION

IN POOLS WITH DEPTHS EXCEEDING 7', THE TOP OF THE PLYWOOD BAFFLE DOES NOT NEED TO EXTEND TO THE TEMPORARY RISER CREST. SUPER SILT FENCE BAFFLES NEED NOT EXTEND TO TRCE ELEVATION.

BAFFLES SHALL BE TIED INTO ONE SIDE OF THE BASIN UNLESS OTHERWISE SHOWN ON THE PLAN DRAWINGS.

SUBSTITUTION OF MATERIALS NOT SPECIFIED IN THIS DETAIL SHALL BE APPROVED BY THE DEPARTMENT OR THE LOCAL CONSERVATION DISTRICT BEFORE INSTALLATION.

DAMAGED OR WARPED BAFFLES SHALL BE REPLACED WITHIN 7 DAYS OF INSPECTION.

BAFFLES REQUIRING SUPPORT POSTS SHALL NOT BE INSTALLED IN BASINS REQUIRING IMPERVIOUS LINERS.

STANDARD CONSTRUCTION DETAIL #7-14
BAFFLE

NOT TO SCALE

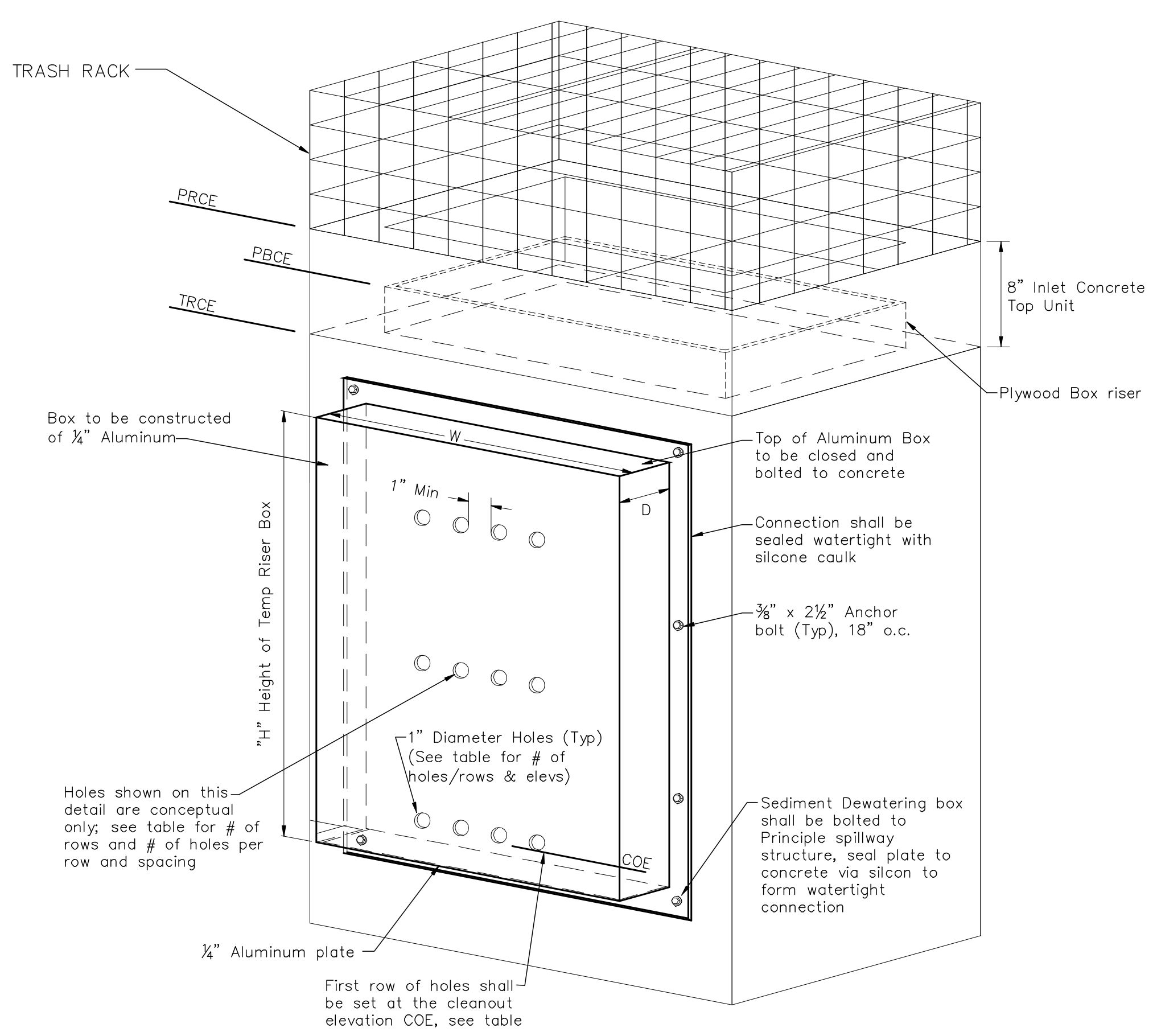
TRASH RACK
PRCE
PRCE
TRCE
8" Inlet Concrete Top Unit
Plywood Box riser
Box to be constructed of ¼" Aluminum
W
Top of Aluminum Box to be closed and bolted to concrete
1" Min
D
Connection shall be sealed watertight with silicone caulk
⅜" x 2½" Anchor bolt (Typ), 18" o.c.
"H" Height of Temp Riser Box
1" Diameter Holes (Typ) (See table for # of holes/rows & elevs)
Holes shown on this detail are conceptual only; see table for # of rows and # of holes per row and spacing
Sediment Dewatering box shall be bolted to Principle spillway structure, seal plate to concrete via silcon to form watertight connection
COE
¼" Aluminum plate
First row of holes shall be set at the cleanout elevation COE, see table

	BASIN NO.	COE (FT)	TEMP CREST ELEV TRCE (FT)	PERM CREST ELEV PRCE (FT)	PLYWOOD BOX CREST ELEV PBCE (FT)	TEMP FABRICATED RISER HEIGHT H (FT)	TEMP FABRICATED RISER WIDTH W (FT)	TEMP FABRICATED RISER DEPTH D (FT)	PERFORATIONS NO. HOLES PER ROW	PERFORATIONS NO. OF ROWS	PERFORATIONS VERTICAL SPACING OF ROWS (FT)
Phase 2	4A	459.1	462.5	463.5	465.2	*5	1.5	0.5	10	5	1.2
Phase 5	5	464.0	NA	466.0	NA	**2.5	1.5	0.5	14	3	.67
Future Phase	6	480.0	NA	482.0	NA	**2.5	1.5	0.5	4	4	0.5

* Basin 4A temp riser attachment shall be installed from elevation 457.5 (bottom) to top of outlet structure without the 12" top slab (TRCE elv). The first two rows of holes shall be installed in the fabriced riser attachment and the final two rows shall be installed in the plywood extension. The riser attachment is installed to 457.5 as to be below the basins low flow orfice (allows for basin to dewater through the holes as intended). # of holes per rule of thumb method.

** Basins 5 & 6 fabricated risers shall accomodate dewatering holes extending from the cleanout elevation to top of box (fabricated box height to be such to allow for holes at cleanout level).

SEDIMENT BASIN TEMPORARY RISER BOX

N.T.S.

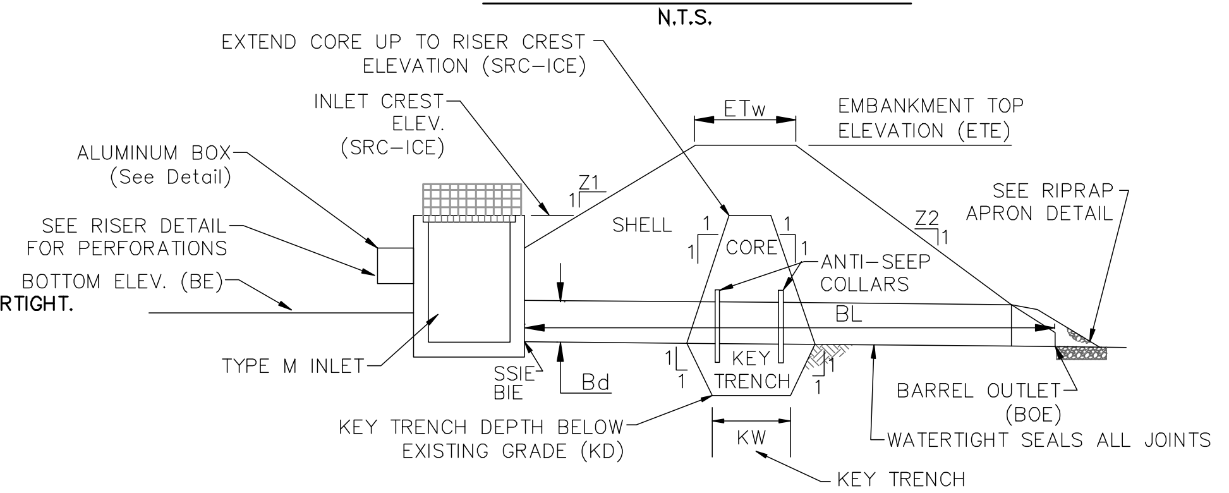
EXTEND CORE UP TO RISER CREST ELEVATION (SRC-ICE)
INLET CREST ELEV. (SRC-ICE)
ETw
EMBANKMENT TOP ELEVATION (ETE)
ALUMINUM BOX (See Detail)
SEE RISER DETAIL FOR PERFORATIONS
Z1
SHELL
CORE
Z2
SEE RIPRAP APRON DETAIL
ANTI-SEEP COLLARS
BOTTOM ELEV. (BE)
BL
TYPE M INLET
SSIE BIE
Bd
KEY TRENCH
BARREL OUTLET (BOE)
WATERTIGHT SEALS ALL JOINTS
KEY TRENCH DEPTH BELOW EXISTING GRADE (KD)
KW
KEY TRENCH WIDTH (KW)

SECTION VIEW

	BASIN/ TRAP NO.	Z1 (FT)	Z2 (FT)	FABRICATED RISER HEIGHT H (FT)	FABRICATED RISER WIDTH W (FT)	FABRICATED RISER DEPTH D (FT)	FABRICATED RISER ELEV. SRE (FT)	FABRICATED RISER PERF. ELEV COE (FT)	STORM SEWER INVERT ELEV. SSIE (FT)	INLET CREST ELEV. ICE (FT)	EMBANK. TOP ELEV. ETE (FT)	BOTTOM ELEV. BE (FT)
Phase 2	4A	3	3	*	*	*	*	459.1	455.8	465.2	467.0	457.5
Phase 5	5	3	3	*	*	*	*	464.0	460.8	466.0	468.0	463.0
Future Phase	6	3	3	*	*	*	*	480.0	478.5	482.0	484.0	479.0

* See above standalone Sediment Basin Temporary Riser Box.

	BASIN/ TRAP NO.	EMBANKMENT TOP ELEV ETE (FT)	EMBANKMENT TOP WIDTH ETw (FT)	EMBANKMENT KEY TRENCH DEPTH KD (FT)	EMBANKMENT KEY TRENCH WIDTH KW (FT)	CLEANOUT ELEV COE (FT)	BOTTOM ELEV BE (FT)	BARREL DIA Bd (IN)	BARREL INLET ELEV BIE (FT)	BARREL MAT'L	BARREL LENGTH BL (FT)	BARREL OUTLET ELEV BOE (FT)
Phase 2	4A	467.0	8	2	4	459.1	457.5	36	455.8	HDPE	80	455.0
Phase 5	5	468.0	8	2	4	464.0	463.0	30	460.8	HDPE	60	460.2
Future Phase	6	484.0	8	2	4	480.0	479.0	24	478.5	HDPE	35	478.0

NOTES:
SEDIMENT BASINS, INCLUDING ALL APPURTENANT WORKS, SHALL BE CONSTRUCTED TO THE DETAIL AND DIMENSIONS SHOWN ON THE E&S PLAN DRAWINGS.

AREA UNDER EMBANKMENT SHALL BE CLEARED, GRUBBED, AND STRIPPED OF TOPSOIL TO A DEPTH OF TWO FEET PRIOR TO ANY PLACEMENT AND COMPACTION OF EARTHEN FILL. FILL MATERIAL FOR THE EMBANKMENTS SHALL BE FREE OF ROOTS, OR OTHER WOODY VEGETATION, ORGANIC MATERIAL, LARGE STONES, AND OTHER OBJECTIONABLE MATERIALS. THE EMBANKMENT SHALL BE COMPACTED IN LAYERED LIFTS OF NOT MORE THAN 6 TO 9 IN. THE MAXIMUM ROCK SIZE SHALL BE NO GREATER THAN 2/3 THE LIFT THICKNESS. UPON COMPLETION, THE EMBANKMENT SHALL BE SEEDED AND MULCHED OR OTHERWISE STABILIZED ACCORDING TO THE SPECIFICATIONS OF THE E&S PLAN DRAWINGS. TREES SHALL NOT BE PLANTED ON THE EMBANKMENT.

ACCESS SHALL BE PROVIDED FOR SEDIMENT REMOVAL AND OTHER REQUIRED MAINTENANCE ACTIVITIES.

A CLEAN OUT STAKE SHALL BE PLACED NEAR THE CENTER OF EACH BASIN. ACCUMULATED SEDIMENT SHALL BE REMOVED WHEN IT HAS REACHED THE CLEAN OUT ELEVATION ON THE STAKE AND RESTORE THE BASIN TO ITS ORIGINAL DIMENSIONS. DISPOSE OF MATERIALS REMOVED FROM THE BASIN IN THE MANNER DESCRIBED IN THE E&S PLAN.

INSPECT ALL SEDIMENT BASINS ON AT LEAST A WEEKLY BASIS AND AFTER EACH RUNOFF EVENT. CHECK BASIN EMBANKMENTS, SPILLWAYS, AND OUTLETS FOR EROSION, PIPING AND SETTLEMENT. NECESSARY REPAIRS SHALL BE MADE IMMEDIATELY. DISPLACED RIPRAP WITHIN THE OUTLET ENERGY DISSIPATER SHALL BE REPLACED IMMEDIATELY. ACCUMULATED SEDIMENT SHALL BE REMOVED AND DISTURBED AREAS SHALL BE STABILIZED INSIDE THE BASIN BEFORE CONVERSION TO A STORMWATER MANAGEMENT FACILITY. THE DEVICE SHOWN IN STANDARD CONSTRUCTION DETAIL #7-16 MAY BE USED TO DEWATER SATURATED SEDIMENT PRIOR TO ITS REMOVAL. ROCK FILTERS SHALL BE ADDED AS NECESSARY.

STANDARD CONSTRUCTION DETAIL #7-6 & #8-7
TYPE M INLET SEDIMENT BASIN-TRAP &
SEDIMENT BASIN EMBANKMENT AND SPILLWAY DETAILS

NOT TO SCALE

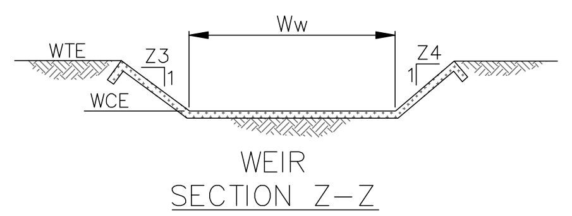

WEIR SECTION Z-Z

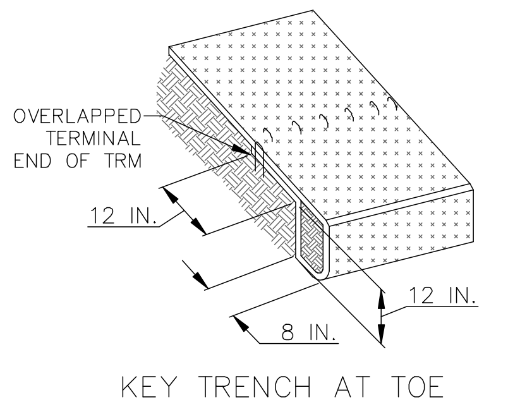

KEY TRENCH AT TOE OF SLOPE OF SPILLWAY

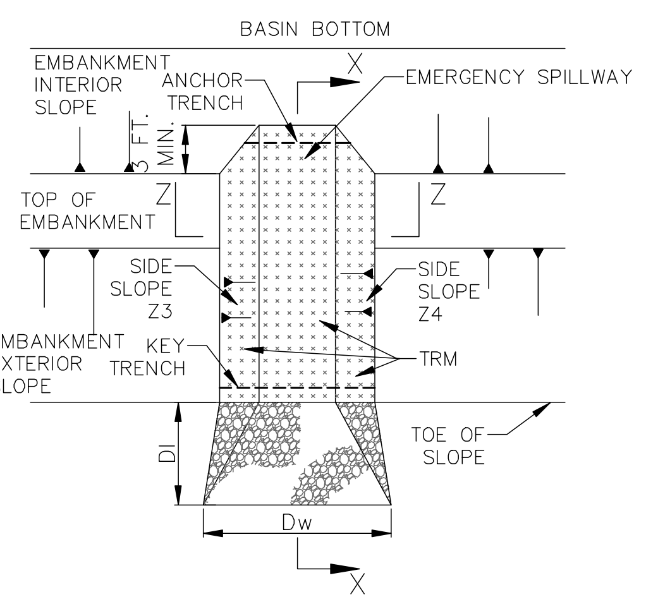

PLAN VIEW RIPRAP OUTLET DISSIPATOR

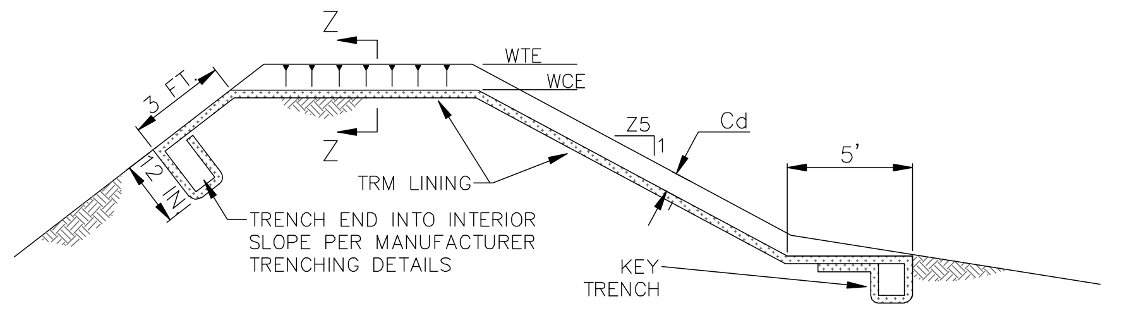
Z
Z1
WTE
WCE
Z5
Cd
5'
TRM LINING
TRENCH END INTO INTERIOR SLOPE PER MANUFACTURER TRENCHING DETAILS
KEY TRENCH

EMBANKMENT SECTION ALONG EMERGENCY SPILLWAY
SECTION X-X

RIPRAP OUTLET DISSIPATOR

	BASIN NO.	WEIR Z3 (FT)	WEIR Z4 (FT)	WEIR TOP ELEV WTE (FT)	WEIR CREST ELEV WCE (FT)	WEIR WIDTH Ww (FT)	LINING TRM TYPE	LINING STAPLE PATTERN	CHANNEL Z5 (FT)	CHANNEL DEPTH Cd (FT)	DISSIPATOR LENGTH Dl (FT)	DISSIPATOR WIDTH Dw (FT)	DISSIPATOR RIPRAP SIZE (R-_)	DISSIPATOR RIPRAP THICK. DRt (IN)
Phase 2	4A	3	3	467.0	466.0	360	**NA	Per Man	3	0.5	NA	NA	NA	NA
Phase 5	5	3	3	468.0	466.5	220	*SC250	Per Man	3	0.5	NA	NA	NA	NA
Future Phase	6	3	3	484.0	482.5	90	*SC250	Per Man	3	0.5	NA	NA	NA	NA

*SC250 = permanent SC250 liner as Manufactures by North American Green
** Emergency spillway not used in design; all flow through principal structure.

liner with vegetation

NOTES:

HEAVY EQUIPMENT SHALL NOT CROSS OVER SPILLWAY WITHOUT PRECAUTIONS TAKEN TO PROTECT TRM LINING.

DISPLACED LINER WITHIN THE SPILLWAY AND/OR OUTLET CHANNEL SHALL BE REPLACED IMMEDIATELY.

RIPRAP AT TOE OF EMBANKMENT SHALL BE EXTENDED A SUFFICIENT LENGTH IN BOTH DIRECTIONS TO PREVENT SCOUR.

THE USE OF BAFFLES THAT REQUIRE SUPPORT POSTS ARE RESTRICTED FROM USE IN BASINS REQUIRING IMPERVIOUS LINERS.

STANDARD CONSTRUCTION DETAIL #7-13
SEDIMENT BASIN EMERGENCY SPILLWAY WITH TRM LINING

NOT TO SCALE

ALL SEDIMENT BASIN OUTFALL PIPES SHALL BE CONSTRUCTED WITH A CONCRETE CRADLE. ALL BASINS BERMS SHALL BE CONSTRUCTED IN ACCORDANCE WITH STANDARD CONSTRUCTION DETAIL #7-6 INCLUDING ANTI-SEEP COLLARS INSTALLED IN BERM CORE. NO CRADLE NEEDED FOR PORTIONS OF OUTFALL PIPES PREVIOUSLY INSTALLED WITH TRAIL INSTALLATION.

ANTI-SEEP COLLARS TO BE INSTALLED PER DETAIL. NO FILTER DIAPHRAGM PROPOSED.

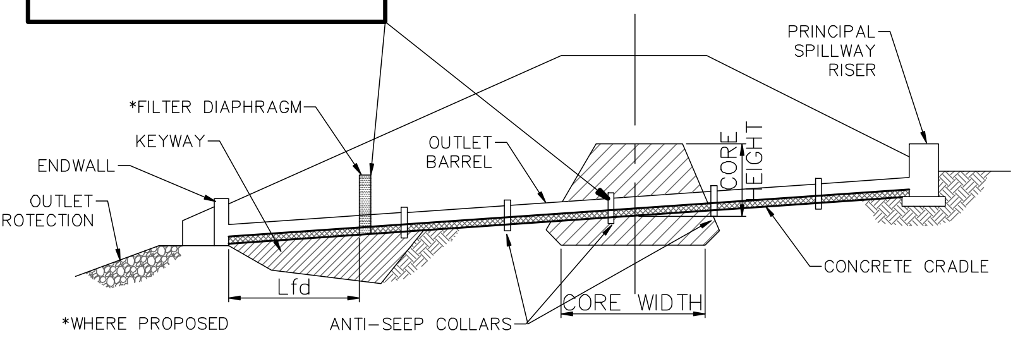

EMBANKMENT ALONG PRINCIPAL SPILLWAY

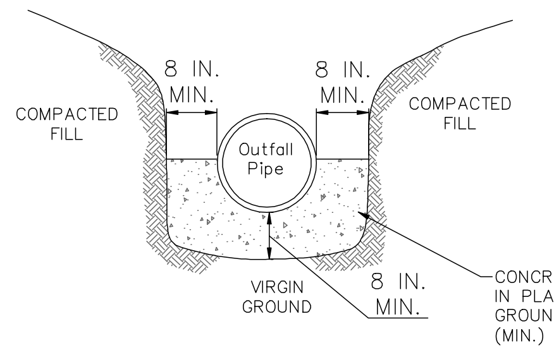

CROSS-SECTION AT OUTLET BARREL

NOTES:
A CONCRETE CRADLE SHALL BE USED IN CONJUNCTION WITH ANTI-SEEP COLLARS. ANTI-SEEP COLLAR NUMBER, SIZE AND SPACING SHALL BE AS SHOWN ELSEWHERE IN PLAN.
* NO FILTER DIAPHRAGM IS PROPOSED.

STANDARD CONSTRUCTION DETAIL #7-17
CONCRETE CRADLE FOR BASIN OR TRAP OUTLET BARREL

NOT TO SCALE

CRITICAL STAGES OF PLAN IMPLEMENTATION

This plan identifies the Post Construction Stormwater Management BMPs for the project. In accordance with NPDES permitting requirements, critical stages of implementation of the plan shall have a licensed professional or designee on site. The critical stages of construction associated with this project would be construction of the Bioretention-Detention Basin embankments and outlet structures, soil restoration of basin bottoms and verification of appropriate basin seeding. All other BMPs can be inspected after construction to verify consistency with the intended design.

UTILITY GENERAL NOTES

1. Public water service shall be provided to the project via water main extensions from the water main stubs installed with Phase I construction (stubs are located at the S. Fall Harvest and S. Autumn Chase Drive intersections with Hertzler Road.
2. Public sanitary sewer service shall be provided to the project via gravity sewer extensions. The northern portion of the site shall be served via extension from existing manhole LS11-31 previously installed with Autumn Chase Phase I and southern portion of the site (future phases) shall be served via an extension from the sewer system located within the Pennington Farms Community. All sewer construction to be in accordance with Township standards.
3. Electric and telecommunication utilities shall serve the project. These utility designs shall be performed by the applicable utility company after conditional plan approval.

PERMANENT SEEDING

A. All disturbed soil not to be covered with impervious surfaces, riprap or landscaping mulch shall be permanently seeded to provide protection against the impact of precipitation, running water and wind.
B. Mulching shall be used to protect seeding and help in preventing runoff. Clean straw mulch shall be required in all disturbed areas and applied at a rate of 3 tons/acre (equivalent to 0.75" to 1" deep). Clean straw mulch should not be finely chopped nor broken during application.

Maintenance procedure:
1) Maintain a minimum 70% soil surface coverage with grass and/or mulch.
2) If a washout, slope failure or similar disturbance occurs, correct drainage problem if necessary, then reapply soil to the proper grade, reapply soil amendments, seed and mulch.

Permanent seeding schedule is as follows:
For gentle lawn areas
Species: 40% Kentucky Bluegrass
40% Pennlawn Creeping Red Fescue
20% Norlea Perennial Ryegrass

For Swales, steep slopes and wet areas: 100% Tall Fescue, varieties such as K-31, Altra, or other recently released dwarf variety
% Pure live seed: 98%
Application rate: 6 lbs./1000 sq. ft.
Fertilizer type: general purpose granular, 10-20-20
Fertilizer application rate: 1000 lbs per acre
Liming rate: Four (4) tons per acre of agricultural grade lime
Strawbale mulch rate: three (3) tons per acre
Seeding dates: Between 4/1 and 10/15

TEMPORARY SEEDING

The contractor shall temporarily stabilize any rough graded area, topsoil stockpile or unused excavated fill material. The grass will provide interim protection against the impact of precipitation, running water and wind.
Temporary seeding schedule is as follows:

Species: annual rye grass
% Live Seed: 98%
Application rate: 1 lbs./1000 sq. ft.
Fertilizer type: general purpose granular, 5-5-5
Fertilizer application rate: 1000 lbs per acre
Liming rate: one (1) ton per acre of agricultural grade lime
Strawbale mulch rate: three (3) tons per acre
Seeding dates: no seeding between 1/1 and 3/15

STABILIZATION NOTES

1. Permanent stabilization is defined as a minimum uniform 70% perennial vegetative cover or other permanent non-vegetative cover with a density sufficient to resist accelerated surface erosion and subsurface characteristics sufficient to resist sliding and other movements.
2. Immediately after earth disturbance activities cease or temporary cessation preparations should be made for seeding and mulching to begin (i.e. anticipate the completion date and schedule the seeder). In no case should an area exceeding 15,000 square feet, which is to be stabilized by vegetation, reach final grade without being seeded and mulched. During non-germinating periods, mulch must be applied at the specified rates. Disturbed areas which are not at finished grade and which will be re-disturbed within 1 year must be stabilized in accordance with the temporary vegetative stabilization specifications. Disturbed areas which are at final grade or which will not be re-disturbed within 1 year must be stabilized in accordance with the intended permanent vegetative stabilization specifications.
3. An erosion control blanket will be installed on all disturbed slopes 3:1 or steeper, all areas of concentrated flows, all disturbance with 50' of Waters of the Commonwealth and all other areas specifically identified on the plans. N.A.G. S75 biodegradable matting shall be used for all general slope matting unless otherwise noted on the plans.
4. Soil restoration and amendments of the basin bottoms shall be provided at time of conversion to permanent stormwater basins. The basin bottom preparation consists of over excavating the basin bottoms to 12" below finished grade, scarification/till the subgrade bottom (10" depth desired), smooth out bottom with light weight track equipment and place 12" of the amended soils mixture across basin bottom followed by stabilization with intended basin seed mixture and mulch. The scarification/tiling of the subsoils is intended to enhance permeability of the subsoils and the amended soils will also promote infiltration and enhance vegetation growth
5. Replace all topsoil where construction is complete (4" to 8" depth). Prior to seeding, prepare surface by removal of rocks and unsuitable matter by hand raking or the use of a rock hound with light weight equipment. Stabilize with intended seed, straw and mulch per intended seeding specifications (See plan for type: grass, meadow, wetland mix and vegetated filter strip). Matting is required for all slopes 3:1 and steeper, see plan for locations).
6. Straw and hay mulch should be anchored immediately after application to prevent being windblown. A tractor-drawn implement may be used to "crimp" the straw or hay into the soil. This method is limited to slopes no steeper than 3:1. The machinery should be operated on the contour. (Note: Crimping of hay or straw by running over it with tracked machinery is not recommended.)
   - A. Asphalt, either emulsified or cut-back, containing no solvents or other diluting agents toxic to plant or animal life, uniformly applied at the rate of 31 gallons per 1000 sy may be used to tack mulch.
   - B. Synthetic Binders (chemical binders) may be used as recommended by the manufacturer to anchor mulch provided sufficient documentation is provided to show they are non-toxic to native plant and animal species.
   - C. Wood mulch can be used over straw at a rate of 210 lb. per 1000 sy.
   - D. Lightweight plastic, fiber, or paper nets may be stapled over the mulch to manufacturer's recommendations.
7. Tracking steep slopes (>25% or 4:1) may be utilized by running tracked machinery up and down the slope, leaving tread marks parallel to the contour. (Note: If a bulldozer is used, the blade shall be up.). Care should be exercised on soils having a clay content to avoid over-compaction. See notes above for permanent stabilization.

STANDARD EROSION & SEDIMENT CONTROL PLAN NOTES

1. A copy of the stamped approved drawings signed and dated by the Cumberland County Conservation District must be available at the project site at all times.
2. At least 7 days prior to starting any earth disturbance activities (including clearing and grubbing), the owner and/or operator shall invite all contractors, the landowner, appropriate municipal officials, the E&S Plan preparer, the post construction stormwater management plan preparer, and a representative from the Cumberland County Conservation District to an on-site preconstruction meeting.
3. At least 3 days prior to starting any earth disturbance activities, or expanding into an area previously unmarked, the Pennsylvania One Call System Inc. shall be notified at 1-800-242-1776 for the location of existing underground utilities.
4. All earth disturbance activities shall proceed in accordance with the sequence provided on the plan drawings. Deviation from that sequence must be approved in writing from the Cumberland County Conservation District or by DEP prior to implementation.
5. Clearing, grubbing, and topsoil stripping shall be limited to those areas described in each stage of the construction sequence. General site clearing, grubbing and topsoil stripping may not commence in any stage or phase of the project until the E&S BMPs specified by the Construction Sequence for that stage or phase has been installed and are functioning as described in this document.
6. At no time shall construction vehicles be allowed to enter areas outside the limit of disturbance boundaries shown on the plan maps. These areas must be clearly marked and fenced off before clearing and grubbing operations begin.
7. Stockpile heights must not exceed 35 feet. Stockpile slopes must be 2H:1V or flatter.
8. Immediately upon discovering unforeseen circumstances posing the potential for accelerated erosion and/or sediment pollution, the operator shall implement appropriate BMPs to minimize the potential for erosion and sediment pollution and notify the Cumberland County Conservation District and/or the regional office of DEP.
9. All building materials and wastes must be removed from the site and recycled or disposed of in accordance with the Department's Solid Waste Management Regulations at 25 Pa. Code Chapter 260, §§260.1 et seq., 271.1, and 287.1 et. seq. No building materials or wastes or unused building materials shall be burned, buried, dumped, or discharged at the site.
10. All off-site waste and borrow areas must have an E&S Plan approved by the Cumberland County Conservation District or DEP fully implemented prior to being activated.
11. The contractor is responsible for ensuring that any material brought on site is Clean Fill.
12. Form FP-001 must be retained by the property owner for any fill material affected by a spill or release of a regulated substance but qualifying as Clean Fill due to analytical testing. Clean Fill is defined as: Uncontaminated, non-water soluble, non-decomposable, inert, solid material. The term includes soil, rock, stone, dredged material, used asphalt, and brick, block or concrete from construction and demolition activities that is separate from other waste and is recognizable as such. The term does not include materials placed in or on the waters of the Commonwealth unless otherwise authorized. (The term "used asphalt" does not include milled asphalt or asphalt that has been processed for re-use.). Any placement of clean fill that has been affected by a spill or release of a regulated substance must use form FP-001 to certify the origin of the fill material and the results of the analytical testing to qualify the material as clean fill. Form FP-001 must be retained by the owner of the property receiving the fill. Environmental due diligence must be performed to determine if the fill materials associated with the project qualify as clean fill. Environmental due diligence is defined as: Investigative techniques, including, but not limited to, visual property inspections, electronic data base searches, review of property ownership, review of property use history, Sanborn maps, environmental questionnaires, transaction screens, analytical testing, environmental assessments or audits. Analytical testing is not a required part of due diligence unless visual inspection and/or review of the past land use of the property indicates that the fill may have been subjected to a spill or release of a regulated substance. If the fill may have been affected by a spill or release of a regulated substance, it must be tested to determine if it qualifies as clean fill. Testing should be performed in accordance with Appendix A of the Department's policy "Management of Clean Fill."
13. All pumping of water from any work area shall be done according to the procedure described in this plan, over undisturbed vegetated areas.
14. Until the site is stabilized, all E&S BMPs must be maintained properly. Maintenance must include inspections of all E&S BMPs after each runoff event and on a weekly basis. All preventative and remedial maintenance work, including clean out, repair, replacement, re-grading, reseeding, re-mulching and re-netting must be performed immediately. If E&S BMPs fail to perform as expected, replacement BMPs, or modifications of those installed will be required.
15. A written report showing dates that E&S BMPs were inspected as well as any deficiencies found and the date they were corrected shall be maintained on the site and be made available to regulatory agency officials at the time of inspection.
16. Sediment tracked onto any public roadway or sidewalk shall be returned to the construction site by the end of each work day and disposed in the manner described in this plan. In no case shall the sediment be washed, shoveled, or swept into any roadside ditch, storm sewer, or surface water.
17. All sediment removed from BMPs shall be disposed of in the manner described on the plan drawings.
18. Areas which are to be topsoiled shall be scarified to a minimum depth of 4 inches prior to placement of topsoil. Areas to be vegetated shall have a minimum 4 inches of topsoil in place prior to seeding and mulching. Fill outslopes shall have a minimum of 2 inches of topsoil.
19. All fills shall be compacted as required to reduce erosion, slippage, settlement, subsidence or other related problems. Fill intended to support buildings, structures and conduits, etc. shall be compacted in accordance with local requirements or codes.
20. Fill materials shall be free of frozen particles, brush, roots, sod, or other foreign or objectionable materials that would interfere with or prevent construction of satisfactory fills.
21. Frozen materials or soft, mucky, or highly compressible materials shall not be incorporated into fills.
22. Fill shall not be placed on saturated or frozen surfaces.
23. Seeps or springs encountered during construction shall be handled in accordance with the standard and specification for subsurface drain or other approved method.
24. All graded areas shall be permanently stabilized immediately upon reaching finished grade. Cut slopes in competent bedrock and rock fills need not be vegetated.
25. Immediately after earth disturbance activities cease in any area or subarea of the project, the operator shall stabilize all disturbed areas. During non-germinating months, mulch or protective blanketing shall be applied as described in the plan. Areas not at finished grade, which will be reactivated within 1 year, may be stabilized in accordance with the temporary stabilization specifications. Those areas which will not be reactivated within 1 year shall be stabilized in accordance with the permanent stabilization specifications.
26. Permanent stabilization is defined as a minimum uniform, perennial 70% vegetative cover or other permanent non-vegetative cover with a density sufficient to resist accelerated erosion. Cut and fill slopes shall be capable of resisting failure due to slumping, sliding, or other movements.
27. E&S BMPs must remain functional as such until all areas tributary to them are permanently stabilized or until they are replaced by another BMP approved by the Cumberland County Conservation District or DEP.
28. Upon completion of all earth disturbance activities and permanent stabilization of all disturbed areas, the owner and/or operator shall contact the Cumberland County Conservation District for an inspection prior to removal/conversion of the E&S BMPs.
29. After final site stabilization has been achieved, temporary E&S BMPs must be removed or converted to permanent post construction stormwater management BMPs. Areas disturbed during removal or conversion of the BMPs must be stabilized immediately. In order to ensure rapid revegetation of disturbed areas, such removal/conversions should be done only during the germinating season.
30. Upon completion of all earth disturbance activities and permanent stabilization of all disturbed areas, the owner and/or operator shall contact the Cumberland County Conservation District to schedule a final inspection.
31. Erosion control blanketing shall be installed on all slopes 3H:1V or steeper within 50 feet of a surface water and on all other disturbed areas specified on the plan maps and/or detail sheets.
32. Failure to correctly install E&S BMPs, failure to prevent sediment-laden runoff from leaving the construction site, or failure to take immediate corrective action to resolve failure of E&S BMPs may result in administrative, civil, and/or criminal penalties being instituted by the Pennsylvania Department of Environmental Protection as defined in Section 602 of the Pennsylvania Clean Streams Law. The Clean Streams Law provides for up to $10,000 per day in civil penalties, up to $10,000 in summary criminal penalties, and up to $25,000 in misdemeanor criminal penalties for each violation.
33. Concrete wash water shall be handled in the manner described on the plan drawings. In no case shall it be allowed to enter any surface waters or groundwater systems.
34. All channels shall be kept free of obstructions including but not limited to fill, rocks, leaves, woody debris, accumulated sediment, excess vegetation, and construction materia/wastes.
35. Underground utilities cutting through any active channel shall be immediately backfilled and the channel restored to its original cross-section and protective lining. Any base flow within the channel shall be conveyed past the work area in the manner described in this plan until such restoration is complete
36. Sediment basins and/or traps shall be kept free of all construction waste, wash water, and other debris having potential to clog the basin/trap outlet structures and/or pollute the surface waters.
37. Any damage that occurs in whole or in part as a result of basin or trap discharge shall be immediately repaired by the permittee in a permanent manner satisfactory to the municipality, Cumberland County Conservation District and the owner of the damaged property.
38. Erosion control blanketing shall be installed on all slopes 3H:1V or steeper within 50 feet of a surface water and on all other disturbed areas specified on the plan maps and/or detail sheets.
39. Fill material for embankments shall be free of roots, or other woody vegetation, organic material, large stones, and other objectionable materials. The embankment shall be compacted in maximum 8" layered lifts at 95% modified proctor per ASTM D1557.

DATE
REVISIONS
1.
2.
3.
4.
5.
6.
7.
8.
9.

MELLOTT ENGINEERING, INC.
Civil Engineering • Land Planning & Development • Water Resources
7500 Devonshire Heights Road • Hummelstown, PA 17036
mellotteng@comcast.net
717-566-6533

ES4

EROSION AND SEDIMENTATION CONTROL PLAN
FOR
AUTUMN CHASE PRD - PHASE V
Land Developer: Hertzler Road Associates, L.P.
UPPER ALLEN TOWNSHIP CUMBERLAND COUNTY PENNSYLVANIA

Project No. 202236
Date February 1, 2023

Sheet No. ES4
21 of 21