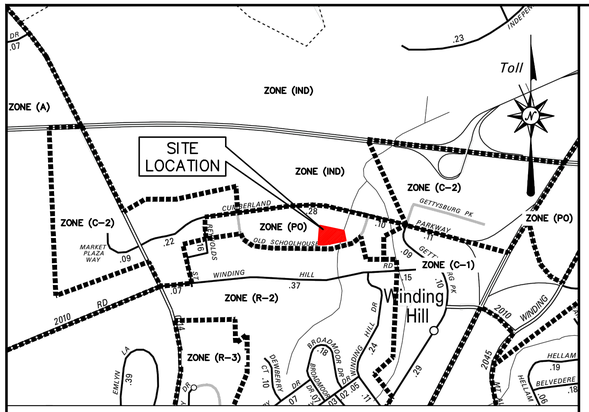

LOCATION MAP

SCALE: 1"=800'

GRAPHIC SCALE
800 400 0 800
SCALE IN FEET

ACT 287 LIST OF UTILITIES

THE CONTRACTOR SHALL COMPLY WITH THE PROVISIONS OF ACT 287 OF 1974 AS AMENDED BY ACT 187 OF 1996 FOR NOTIFICATION OF UTILITIES BEFORE EXCAVATION IN CONTRACT AREA. THE ONE UNDERGROUND UTILITIES LOCATION CALL NUMBER IS 1-800-242-1776. DESIGN SERIAL NUMBER IS 20231515029, SUBMITTED ON 05/31/2023.

UTILITIES AND RESPONSES PROVIDED BY PA ONE CALL:

UPPER ALLEN TWP
100 GETTYSBURG PIKE
MECHANICSBURG, PA. 17055
CONTACT: KODI HOCKENBERRY
EMAIL: KHOCKENBERRY@UATWP.ORG

VERIZON PENNSYLVANIA LLC
1026 HAY STREET
PITTSBURGH, PA. 15221
CONTACT: DEBORAH BARUM
EMAIL: deborah.d.dello@verizon.com
PHONE: 412-344-3901

UGI UTL INC
1301 AIP DRIVE
MIDDLETOWN, PA. 17057
CONTACT: STEPHEN BATEMAN
EMAIL: sbateman@ugi.com
PHONE: 610-807-3174

UPPER ALLEN TWP PUBLIC WORKS DEPT
100 GETTYSBURG PIKE
MECHANICSBURG, PA. 17055
CONTACT: COLLIN BARGE
EMAIL: CBARGE@UATWP.ORG
PHONE: 717-697-9548

VEOLIA WATER PENNSYLVANIA INC
6319 ALLENTOWN BOULEVARD
HARRISBURG, PA. 17112
CONTACT: CHRISTOPHER BRIDE
EMAIL: CHRISTOPHER.BRIDE@VEOLIA.COM
PHONE: 717-901-6317

COMCAST
4601 SMITH STREET
HARRISBURG, PA. 17109
CONTACT: MICHAEL SWEIGARD
EMAIL: mike_sweigard@cable.comcast.Com
PHONE: 717-298-6450

PPL ELECTRIC UTILITIES CORPERATION
437 BLUE CHURCH RD
PAXINOS, PA. 17860
CONTACT: DOUG HAUPT
EMAIL: dlhaupt@pplweb.com
PHONE: 570-490-5684

Sheet List Table

01 COVER SHEET
02 GENERAL NOTES
03 EXISTING CONDTIONS & DEMOLITION PLAN
04 SITE PLAN
05 GRADING AND DRAINAGE PLAN
06 SITE UTILITIES PLAN
07 PROFILES
08 LIGHTING PLAN
09 LANDSCAPING PLAN
10 LANDSCAPING NOTES AND DETAILS
11 DETAIL SHEET
12 DETAIL SHEET
13 DETAIL SHEET
14 DETAIL SHEET
15 DETAIL SHEET
16 DETAIL SHEET
17 EROSION & SEDIMENT CONTROL PLAN
18 E&S NOTES
19 E&S DETAILS

PRELIMINARY/FINAL LAND DEVELOPMENT PLAN

PROPOSED K CARE - UA (GENIUS KIDS)
151 OLD SCHOOLHOUSE LANE

PARCEL ID 42-26-0243-045

UPPER ALLEN TOWNSHIP, CUMBERLAND COUNTY, PENNSYLVANIA

PREPARED FOR:

GENIUS KIDS
CHILD DEVELOPMENT CENTER
PLAY LEARN GROW

K CARE - UA LLC
C/O MR. KIRAN GUDOOR,
1802 SILVER PINE CIRCLE,
MECHANICSBURG, PA 17050

PREPARED BY:

BL Companies
ARCHITECTURE
ENGINEERING
ENVIRONMENTAL
LAND SURVEYING

2601 Market Place, Suite 350
Harrisburg, PA 17110
(717) 651-9850
(717) 651-9858 Fax

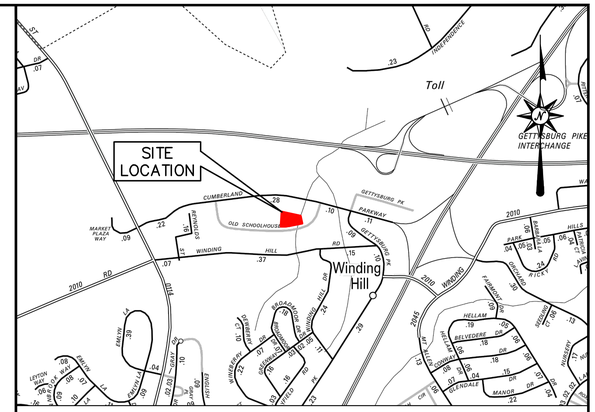

VICINITY MAP

SCALE: 1"=1000'

GRAPHIC SCALE
1000 500 0 1000
SCALE IN FEET

CERTIFICATE OF OWNERSHIP, ACKNOWLEDGEMENT OF PLAN, AND OFFER OF DEDICATION CORPORATION

COMMONWEALTH OF PENNSYLVANIA:

COUNTY OF CUMBERLAND:

ON THIS, THE _____ DAY OF _____, 20 ___ BEFORE ME, _____, THE UNDERSIGNED OFFICER, PERSONALLY APPEARED KIRAN GUDOOR WHO ACKNOWLEDGED HIMSELF TO BE THE PRESIDENT OR VICE PRESIDENT OF K CARE – UA LLC A CORPORATION, AND THAT HE, AS SUCH PRESIDENT OR VICE PRESIDENT, BEING AUTHORIZED TO DO SO, EXECUTED THE FOREGOING INSTRUMENT FOR THE PURPOSE THEREIN CONTAINED BY SIGNING THE NAME OF THE CORPORATION BY HIMSELF AS PRESIDENT OR VICE PRESIDENT.

IN WITNESS WHEREOF, I HAVE HEREUNTO SET MY HAND AND OFFICIAL SEAL.

_____
NOTARY PUBLIC

MY COMMISSION EXPIRES:

_____

CUMBERLAND COUNTY PLANNING DEPARTMENT'S REVIEW CERTIFICATE

REVIEWED BY CUMBERLAND COUNTY PLANNING DEPARTMENT, THIS _____ DAY OF _____, 20__.

ATTEST:_____
DIRECTOR OF PLANNING

UPPER ALLEN TOWNSHIP COMMISSIONERS

CONDITIONALLY APPROVED BY THE BOARD OF COMMISSIONERS UPPER ALLEN TOWNSHIP, THIS _____ DAY OF _____, 20__. THE CONDITIONS OF APPROVAL WERE SATISFIED THIS _____ DAY OF _____, 20__

ATTEST:_____ _____
SECRETARY PRESIDENT

UPPER ALLEN TOWNSHIP PLANNING COMMISSION

CONDITIONAL APPROVAL GRANTED BY PLANNING COMMISSION OF UPPER ALLEN TOWNSHIP ON DAY OF _____, 20__.

THE CONDITIONS OF APPROVAL WERE SATISFIED THIS _____ DAY OF _____, 20__.

ATTEST:_____ _____
SECRETARY CHAIRMAN

LANDOWNER ACKNOWLEDGEMENT OF STORMWATER MANAGEMENT SYSTEM

I, KIRAN GUDOOR DO HEREBY ACKNOWLEDGE THE STORMWATER MANAGEMENT SYSTEM TO BE A PERMANENT FIXTURE THAT CAN BE ALTERED OR REMOVED ONLY AFTER TOWNSHIP APPROVAL OF A REVISED PLAN.

_____

CARBONATE GEOLOGY CERTIFICATION

I, DEREK G. RIDINGER, CERTIFY THAT THE PROPOSED STORMWATER MANAGEMENT FACILITIES ARE NOT UNDERLAIN BY CARBONATE GEOLOGY.

_____
DEREK G. RIDINGER
REG. NO. PE 087055

STORM DRAINAGE PLAN CERTIFICATION

I, ALARIC J. BUSHER, ON THIS _____, HEREBY CERTIFY THAT THE STORMWATER MANAGEMENT PLAN MEETS ALL DESIGN STANDARDS AND CRITERIA OF THE UPPER ALLEN TOWNSHIP STORMWATER MANAGEMENT ORDINANCE.

_____ DATE: 02/12/2024
ALARIC J. BUSHER
REG. NO. PE 60320

COMMONWEALTH OF PENNSYLVANIA – REGISTERED PROFESSIONAL – ALARIC JAMES BUSHER – ENGINEER – NO. PE-60320

RECORDER OF DEEDS CERTIFICATE

RECORDED IN THE OFFICE FOR RECORDING OF DEEDS IN AND FOR CUMBERLAND COUNTY, PENNSYLVANIA, IN INSTRUMENT #_____. WITNESS MY HAND AND SEAL OF OFFICE THIS _____ DAY OF _____, 20____.

_____

WETLAND CERTIFICATION

THE SITE HAS BEEN INVESTIGATED FOR WETLAND AREAS AND TO THE BEST OF MY KNOWLEDGE, THERE ARE NO STATE OR FEDERALLY REGULATED WETLANDS ON SITE.

02/12/2024 _____
DATE JOSEPH P. KEMPF

CERTIFICATION OF ACCURACY

I, GREGORY L. CONDON, HEREBY CERTIFY THAT I AM A REGISTERED LAND SURVEYOR, OR REGISTERED ENGINEER IN COMPLIANCE WITH THE LAWS OF THE COMMONWEALTH OF PENNSYLVANIA; THAT THIS PLAN CORRECTLY REPRESENTS A SURVEY COMPLETED BY ME ON MAY 5, 2023; THAT ALL THE MONUMENTS SHOWN THEREON ACTUALLY EXIST; AND THAT THEIR LOCATION, SIZE, TYPE AND MATERIAL ARE ACCURATELY SHOWN.

_____
GREGORY L. CONDON, P.L.S.
REG. NO. PLS SU32480E

COMMONWEALTH OF PENNSYLVANIA – REGISTERED PROFESSIONAL – GREGORY L. CONDON – LAND SURVEYOR – No. SU-32480-E

MODIFICATIONS REQUESTED

APPROVAL DATE

THE FOLLOWING MODIFICATION OF REQUIREMENTS HAVE BEEN GRANTED AS PART OF THIS PLAN TO THE BOARD OF COMMISSIONERS:

§ 220-5.3.B (5) SIDEWALK LOCATED WITHIN THE STREET RIGHT-OF-WAY — JANUARY 29, 2024
A MODIFICATION IS REQUESTED TO PROVIDE A PORTION OF THE SIDEWALK OUTSIDE OF THE RIGHT-OF-WAY DUE TO LIMITED SPACE WITHIN RIGHT-OF-WAY.

§ 220-5.4.B.(3)(g). ACCESS DRIVE TANGENTIAL ARC OF 30 FEET MINIMUM — JANUARY 29, 2024
A MODIFICATION IS REQUESTED TO PROVIDE A ROUNDED TANGENTIAL ARC WITH A MINIMUM RADIUS OF 15 FEET INSTEAD OF THE REQUIRED 30 FEET.

§ 220-5.13.B.(2)(a)(2). LANDSCAPE ISLAND DIMENSIONAL REQUIREMENTS — JANUARY 29, 2024
A MODIFICATION TO THE DIMENSIONAL REQUIREMENTS FOR THE LANDSCAPE ISLAND AT THE NORTHEAST CORNER AND THE WEST ENTRANCE IS REQUESTED.

PLAN PURPOSE

THE PURPOSE OF THIS PLAN IS TO DESIGN A ±8,500 SF DAY CARE CENTER ALONG WITH ASSOCIATED SITE IMPROVEMENTS SITUATED ON AN APPROX. 1-ACRE PARCEL.

DEVELOPER

K CARE - UA LLC
C/O MR. KIRAN GUDOOR
1802 SILVER PINE CIRCLE,
MECHANICSBURG, PA 17050

OWNER

K CARE - UA LLC
C/O MR. KIRAN GUDOOR
1802 SILVER PINE CIRCLE,
MECHANICSBURG, PA 17050

DATES

ISSUE DATE: JULY 31, 2023
LAST REVISED: FEBRUARY 12, 2024

CV-1 No. 01 of 19

SITE WORK GENERAL NOTES

1. ALL CONSTRUCTION SHALL COMPLY WITH OWNER STANDARDS, UPPER ALLEN TOWNSHIP STANDARDS, PENNSYLVANIA DEPARTMENT OF TRANSPORTATION STANDARDS AND SPECIFICATIONS IN THE ABOVE REFERENCED INCREASING HIERARCHY. IF SPECIFICATIONS ARE IN CONFLICT, THE MORE STRINGENT SPECIFICATION SHALL APPLY. ALL CONSTRUCTION SHALL BE PERFORMED IN ACCORDANCE WITH ALL APPLICABLE OSHA, FEDERAL, STATE AND LOCAL REGULATIONS.

2. REFER TO OTHER PLANS BY MEISTER-COX ARCHITECTS, DETAILS AND PROJECT MANUAL FOR ADDITIONAL INFORMATION. THE CONTRACTOR SHALL VERIFY ALL SITE AND BUILDING CONDITIONS IN THE FIELD AND CONTACT THE CIVIL ENGINEER AND ARCHITECT IF THERE ARE ANY QUESTIONS OR CONFLICTS REGARDING THE CONSTRUCTION DOCUMENTS AND/OR FIELD CONDITIONS, SO THAT APPROPRIATE REVISIONS CAN BE MADE PRIOR TO BIDDING. ANY CONFLICT BETWEEN THE DRAWINGS AND SPECIFICATIONS SHALL BE CONFIRMED WITH THE OWNER'S CONSTRUCTION MANAGER PRIOR TO BIDDING.

3. DO NOT INTERRUPT EXISTING UTILITIES SERVICING FACILITIES OCCUPIED AND USED BY THE OWNER OR OTHERS DURING OCCUPIED HOURS EXCEPT WHEN SUCH INTERRUPTIONS HAVE BEEN AUTHORIZED IN WRITING BY THE OWNER AND THE LOCAL MUNICIPALITIES. INTERRUPTIONS SHALL ONLY OCCUR AFTER ACCEPTABLE TEMPORARY SERVICE HAS BEEN PROVIDED.

4. THE CONTRACTOR SHALL ABIDE BY ALL OSHA, FEDERAL, STATE, AND LOCAL REGULATIONS WHEN OPERATING CRANES, BOOMS, HOISTS, ETC. IN CLOSE PROXIMITY TO OVERHEAD ELECTRIC LINES. IF CONTRACTOR MUST OPERATE EQUIPMENT CLOSE TO ELECTRIC LINES, CONTACT POWER COMPANY TO MAKE ARRANGEMENTS FOR PROPER SAFEGUARDS. ANY UTILITY COMPANY FEES SHALL BE PAID FOR BY THE CONTRACTOR.

5. CONTRACTOR SHALL SUBMIT AN AS-BUILT TOPOGRAPHIC SURVEY PREPARED AND STAMPED BY A LICENSED ENGINEER TO DESIGN ENGINEER AT THE COMPLETION OF CONSTRUCTION. AS-BUILT SURVEY SHALL COMPLY WITH ALL NPDES NOTICE OF TERMINATION REQUIREMENTS, MUNICIPAL ORDINANCE REQUIREMENTS AND INCLUDE ALL SITE ELEMENTS, TOPOGRAPHY, STORM WATER MANAGEMENT FACILITY STRUCTURES/BASINS AND LANDSCAPE ELEMENTS. CONTRACTOR SHALL SUBMIT THE AS-BUILT SURVEY IN BOTH PDF AND AUTOCAD DWG FILE FORMAT TO DESIGN ENGINEER.

6. THE ARCHITECT OR ENGINEER IS NOT RESPONSIBLE FOR SITE SAFETY MEASURES TO BE EMPLOYED DURING CONSTRUCTION. THE ARCHITECT AND ENGINEER HAVE NO CONTRACTUAL DUTY TO CONTROL THE SAFEST METHODS OR MEANS OF THE WORK, JOB SITE RESPONSIBILITIES, SUPERVISION OR TO SUPERVISE SAFETY AND DOES NOT VOLUNTARILY ASSUME ANY SUCH DUTY OR RESPONSIBILITY.

7. THE CONTRACTOR SHALL COMPLY WITH CFR 29 PART 1926 FOR EXCAVATION, TRENCHING, AND TRENCH PROTECTION REQUIREMENTS.

8. INFORMATION ON EXISTING UTILITIES AND STORM DRAINAGE SYSTEMS HAS BEEN COMPILED FROM AVAILABLE INFORMATION INCLUDING UTILITY COMPANY AND MUNICIPAL OR COUNTY OR STATE RECORD MAPS AND/OR FIELD SURVEY AND IS NOT GUARANTEED CORRECT OR COMPLETE. UTILITIES AND STORM DRAINAGE SYSTEMS ARE SHOWN TO ALERT THE CONTRACTOR TO THEIR PRESENCE AND THE CONTRACTOR IS SOLELY RESPONSIBLE FOR DETERMINING ACTUAL LOCATIONS AND ELEVATIONS OF ALL UNDERGROUND AND OVERHEAD UTILITIES AND STORM DRAINAGE SYSTEMS INCLUDING SERVICES. PRIOR TO DEMOLITION OR CONSTRUCTION, THE CONTRACTOR SHALL CONTACT PENNSYLVANIA811 72 HOURS BEFORE COMMENCEMENT OF WORK AT (800) 242-1776 OR AT 811 AND VERIFY ALL UTILITY AND STORM DRAINAGE SYSTEM LOCATIONS. THE CONTRACTOR SHALL EMPLOY THE USE OF A UTILITY LOCATING COMPANY TO PROVIDE SUBSURFACE UTILITY ENGINEERING CONSISTING OF DESIGNATING UTILITIES AND STORM PIPING ON PRIVATE PROPERTY WITHIN THE CONTRACT LIMIT AND CONSISTING OF DESIGNATING AND LOCATING WHERE PROPOSED UTILITIES AND STORM PIPING CROSS EXISTING UTILITIES AND STORM PIPING WITHIN THE CONTRACT LIMITS.

9. DO NOT SCALE DRAWINGS. DIMENSIONS GOVERN OVER SCALED DIMENSIONS.

10. SHOULD CONFLICTING INFORMATION BE FOUND WITHIN THE CONTRACT DOCUMENTS, IT IS INCUMBENT UPON THE CONTRACTOR TO REQUEST CLARIFICATION PRIOR TO PROCEEDING WITH THE WORK. FOR BUDGETING PURPOSES, THE CONTRACTOR SHALL CARRY THE COST OF THE HIGHER QUALITY/QUANTITY OF WORK UNTIL SUCH TIME THAT A CLARIFICATION IS RENDERED.

11. ALL CONTRACTORS AND SUBCONTRACTORS SHALL OBTAIN COMPLETE DRAWING PLAN SETS FOR BIDDING AND CONSTRUCTION. PLAN SETS OR PLAN SET ELECTRONIC POSTINGS SHALL NOT BE DISASSEMBLED INTO PARTIAL PLAN SETS FOR USE BY CONTRACTORS AND SUBCONTRACTORS OF INDIVIDUAL TRADES. IT SHALL BE THE CONTRACTOR'S AND SUBCONTRACTOR'S RESPONSIBILITY TO OBTAIN COMPLETE PLAN SETS OR COMPLETE PLAN SET ELECTRONIC POSTINGS FOR USE IN BIDDING AND CONSTRUCTION.

12. ALL NOTES AND DIMENSION DESIGNATED AS "TYPICAL" OR "TYP" APPLY TO ALL LIKE OR SIMILAR CONDITIONS THROUGHOUT THE PROJECT.

13. CONTRACTOR(S) TO TAKE AND VERIFY ALL DIMENSIONS AND CONDITIONS OF THE WORK AND BE RESPONSIBLE FOR COORDINATION OF SAME. FIELD VERIFY ALL EXISTING CONDITIONS PRIOR TO START OF WORK.

14. BL COMPANIES WILL PREPARE FINAL CONSTRUCTION DOCUMENTS SUITABLE FOR BIDDING AND CONSTRUCTION. PROGRESS SETS OF THESE DOCUMENTS ARE NOT SUITABLE FOR THOSE PURPOSES. IF CLIENT ELECTS TO SOLICIT BIDS OR ENTER INTO CONSTRUCTION CONTRACTS UTILIZING CONSTRUCTION DOCUMENTS THAT ARE NOT YET FINAL, CONSULTANT SHALL NOT BE RESPONSIBLE FOR ANY COSTS OR DELAY ARISING AS A RESULT.

15. NO CONSTRUCTION OR DEMOLITION SHALL BEGIN UNTIL APPROVAL OF THE FINAL PLANS IS GRANTED BY ALL GOVERNING AND REGULATORY AGENCIES.

16. THE OWNER IS RESPONSIBLE FOR OBTAINING ALL NECESSARY BUILDING AND ZONING PERMITS REQUIRED BY GOVERNMENT AGENCIES PRIOR TO CONSTRUCTION. THE CONTRACTOR SHALL CONTACT AND OBTAIN ALL COUNTY AND TOWNSHIP CONSTRUCTION PERMITS, INCLUDING ANY SEWER AND WATER CONNECTION PERMITS, AND ROADWAY CONSTRUCTION PERMITS. THE CONTRACTOR SHALL POST ALL BONDS, PAY ALL FEES, PROVIDE PROOF OF INSURANCE AND PROVIDE TRAFFIC CONTROL NECESSARY FOR THIS WORK.

17. THE CONTRACTOR SHALL SUBMIT SHOP DRAWINGS OF ALL PRODUCTS AND MATERIALS PER PLANS AND SPECIFICATIONS TO THE OWNER AND CIVIL ENGINEER FOR REVIEW AND APPROVAL PRIOR TO FABRICATION OR DELIVERY TO THE SITE. ALLOW A MINIMUM OF 14 WORKING DAYS FOR REVIEW.

18. THE CONTRACTOR SHALL FOLLOW THE SEQUENCE OF CONSTRUCTION NOTES PROVIDED ON THE SEDIMENT AND EROSION CONTROL PLAN.

19. THE CONTRACTOR SHALL REFERENCE ARCHITECTURAL PLANS FOR EXACT DIMENSIONS AND CONSTRUCTION DETAILS OF BUILDING, AND THE RAISED CONCRETE SIDEWALKS, LANDINGS, RAMPS, AND STAIRS.

20. SHOULD ANY UNCHARTED OR INCORRECTLY CHARTED, EXISTING PIPING OR OTHER UTILITY BE UNCOVERED DURING EXCAVATION, CONSULT THE CIVIL ENGINEER IMMEDIATELY FOR DIRECTIONS BEFORE PROCEEDING FURTHER WITH WORK IN THIS AREA.

21. ALL SITE DIMENSIONS ARE REFERENCED TO THE FACE OF CURBS OR EDGE OF PAVING AS APPLICABLE UNLESS OTHERWISE NOTED. ALL BUILDING DIMENSIONS ARE REFERENCED TO THE OUTSIDE FACE OF THE STRUCTURE.

22. THE CONTRACTOR SHALL PROVIDE AND MAINTAIN TRAFFIC DEVICES FOR PROTECTION OF VEHICLES AND PEDESTRIANS CONSISTING OF DRUMS, BARRIERS, SIGNS, LIGHTS, FENCES, TEMPORARY WALKWAYS, TRAFFIC CONTROLLERS AND UNIFORMED TRAFFIC OFFICERS AS REQUIRED OR AS ORDERED BY THE ENGINEER OR AS REQUIRED BY THE LOCAL GOVERNING AUTHORITIES OR AS REQUIRED BY PERMIT STIPULATIONS OR AS REQUIRED BY THE OWNER. CONTRACTOR SHALL MAINTAIN ALL TRAFFIC LANES AND PEDESTRIAN WALKWAYS FOR USE AT ALL TIMES UNLESS WRITTEN APPROVAL FROM THE APPROPRIATE GOVERNING AGENCY IS GRANTED.

23. TRAFFIC CONTROL SIGNAGE SHALL CONFORM TO THE STATE DOT STANDARD DETAIL SHEETS AND THE MANUAL OF UNIFORM TRAFFIC CONTROL DEVICES. SIGNS SHALL BE INSTALLED PLUMB WITH THE EDGE OF THE SIGN 2' OFF THE FACE OF THE CURB, AND WITH 7' VERTICAL CLEARANCE UNLESS OTHERWISE DETAILED OR NOTED.

24. REFER TO DETAIL SHEETS FOR PAVEMENT, CURBING, AND SIDEWALK INFORMATION.

25. THE CONTRACT LIMIT IS THE PROPERTY LINE UNLESS OTHERWISE SPECIFIED OR SHOWN ON THE CONTRACT DRAWINGS.

26. THE CONTRACTOR SHALL SUBMIT A SHOP DRAWING OF THE PAVEMENT MARKING PAINT MIXTURE PRIOR TO STRIPING.

27. PAVEMENT MARKING KEY:

    4" SYDL 4" SOLID YELLOW DOUBLE LINE
    4" SYL 4" SOLID YELLOW LINE
    4" SWL 4" SOLID WHITE LINE
    12" SWSB 12" SOLID WHITE STOP BAR
    4" BWL 4" BROKEN WHITE LINE 10' STRIPE 30' SPACE

28. PARKING SPACES SHALL BE STRIPED WITH 4" SWL; HATCHED AREA SHALL BE STRIPED WITH 4" SWL AT A 45° ANGLE, 2' ON CENTER. HATCHING, SYMBOLS, AND STRIPING FOR HANDICAPPED SPACES SHALL BE PAINTED WHITE. OTHER MARKINGS SHALL BE PAINTED WHITE OR AS NOTED.

29. ALL PAVEMENT MARKINGS SHALL HAVE TWO COATS OF PAVEMENT MARKINGS APPLIED TO STRIPING.

30. PAVEMENT MARKINGS SHALL BE IN ACCORDANCE WITH STATE DOT SPECIFICATIONS.

31. THE CONTRACTOR SHALL RESTORE ANY UTILITY STRUCTURE, DRAINAGE STRUCTURE, PIPE, UTILITY, PAVEMENT, CURBS, SIDEWALKS, LANDSCAPED AREAS, SWALE, PAVEMENT MARKINGS, OR SIGNAGE DISTURBED DURING DEMOLITION AND/OR CONSTRUCTION TO THEIR ORIGINAL CONDITION OR BETTER, AS APPROVED BY THE CIVIL ENGINEER, AND TO THE SATISFACTION OF THE OWNER AND UPPER ALLEN TOWNSHIP.

32. EXISTING BOUNDARY AND TOPOGRAPHY IS BASED ON FIELD WORK COMPLETED BY BISCON AERO ON MAY 8, 2023. THE INFORMATION IS DEPICTED ON DRAWING TITLED "EXISTING CONDITIONS & DEMOLITION PLAN" ; SCALE 1"=20', DATED 07/31/2023, BY BL COMPANIES.

33. ALTERNATIVE METHODS AND PRODUCTS OTHER THAN THOSE SPECIFIED MAY BE USED IF REVIEWED AND APPROVED BY THE OWNER, CIVIL ENGINEER, AND APPROPRIATE REGULATORY AGENCY PRIOR TO INSTALLATION DURING THE BIDDING PROCESS.

34. NO PART OF THE PROJECT PARCEL IS LOCATED WITHIN ANY FEMA DESIGNATED FLOOD HAZARD AREAS.

35. THERE ARE NO WETLANDS LOCATED ON THE SITE AS INDICATED BY NATIONAL WETLANDS INVENTORY (NWI) MAPPING.

36. FIRE LANES SHALL BE ESTABLISHED AND PROPERLY DESIGNATED IN ACCORDANCE WITH THE REQUIREMENTS OF THE FIRE DISTRICT FIRE MARSHAL.

37. THE CONTRACTOR SHALL REMOVE CONFLICTING PAVEMENT MARKINGS IN THE ROADWAY BY METHOD APPROVED BY THE AUTHORITY HAVING JURISDICTION OR DOT AS APPLICABLE FOR THE LOCATION OF THE WORK.

38. ALL ADA DESIGNATED PARKING STALLS, ACCESS AISLES AND PEDESTRIAN WALKWAYS SHALL CONFORM TO THE CURRENT VERSION OF THE AMERICANS WITH DISABILITIES ACT STANDARDS FOR ACCESSIBLE DESIGN AND ANSI STANDARDS AND AS MAY BE SUPERCEDED BY THE STATE BUILDING CODE.

39. CONSTRUCTION OCCURRING ON THIS SITE SHALL COMPLY WITH NFPA 241 STANDARD FOR SAFEGUARDING CONSTRUCTION, ALTERATION AND DEMOLITION OPERATIONS, AND CHAPTER 16 OF NFPA 1 UNIFORM FIRE CODE.

40. ALL BUILDINGS, INCLUDING FOUNDATION WALLS AND FOOTINGS AND BASEMENT SLABS INDICATED ON THE DEMOLITION PLAN ARE TO BE REMOVED FROM THE SITE. CONTRACTOR SHALL SECURE ANY PERMITS, PAY ALL FEES AND PERFORM CLEARING AND GRUBBING AND DEBRIS REMOVAL PRIOR TO COMMENCEMENT OF GRADING OPERATIONS.

41. SEDIMENT AND EROSION CONTROLS AS SHOWN ON THE SEDIMENT AND EROSION CONTROL PLAN AND/OR DEMOLITION PLAN SHALL BE INSTALLED BY THE DEMOLITION CONTRACTOR PRIOR TO START OF DEMOLITION AND CLEARING AND GRUBBING OPERATIONS.

42. REMOVE AND DISPOSE OF ANY SIDEWALKS, FENCES, STAIRS, WALLS, DEBRIS AND RUBBISH REQUIRING REMOVAL FROM THE WORK AREA IN AN APPROVED OFF SITE LANDFILL, BY AN APPROVED HAULER. HAULER SHALL COMPLY WITH ALL REGULATORY REQUIREMENTS.

43. THE CONTRACTOR SHALL SECURE ALL PERMITS FOR HIS DEMOLITION AND DISPOSAL OF HIS DEMOLITION MATERIAL TO BE REMOVED FROM THE SITE. THE CONTRACTOR SHALL POST BONDS AND PAY PERMIT FEES AS REQUIRED. BUILDING DEMOLITION CONTRACTOR SHALL BE RESPONSIBLE FOR PERMITS AND DISPOSAL OF ALL BUILDING DEMOLITION DEBRIS IN AN APPROVED OFF-SITE LANDFILL.

44. ASBESTOS OR HAZARDOUS MATERIAL, IF FOUND ON SITE, SHALL BE REMOVED BY A LICENSED HAZARDOUS MATERIAL ABATEMENT CONTRACTOR.

45. THE CONTRACTOR SHALL PREPARE ALL MANIFEST DOCUMENTS AS REQUIRED PRIOR TO COMMENCEMENT OF DEMOLITION.

46. THE CONTRACTOR SHALL CUT AND PLUG, OR ARRANGE FOR THE APPROPRIATE UTILITY PROVIDER TO CUT AND PLUG ALL SERVICE PIPING AT THE STREET LINE OR AT THE MAIN, AS REQUIRED BY THE UTILITY PROVIDER, OR AS OTHERWISE NOTED OR SHOWN ON THE CONTRACT DRAWINGS. ALL SERVICES MAY NOT BE SHOWN ON THIS PLAN. THE CONTRACTOR SHALL INVESTIGATE THE SITE PRIOR TO BIDDING TO DETERMINE THE EXTENT OF SERVICE PIPING TO BE REMOVED, CUT OR PLUGGED. THE CONTRACTOR SHALL PAY ALL UTILITY PROVIDER FEES FOR ABANDONMENTS AND REMOVALS.

47. THE CONTRACTOR SHALL PROTECT ALL IRON PINS, MONUMENTS AND PROPERTY CORNERS DURING DEMOLITION AND CONSTRUCTION ACTIVITIES. ANY CONTRACTOR DISTURBED PINS, MONUMENTS, AND OR PROPERTY CORNERS, ETC. SHALL BE RESET BY A LICENSED LAND SURVEYOR AT THE EXPENSE OF THE CONTRACTOR.

48. THE DEMOLITION CONTRACTOR SHALL STABILIZE THE SITE AND KEEP EROSION CONTROL MEASURES IN PLACE UNTIL THE COMPLETION OF HIS WORK OR UNTIL THE COMMENCEMENT OF WORK BY THE SITE CONTRACTOR, WHICHEVER OCCURS FIRST, AS REQUIRED OR DEEMED NECESSARY BY THE ENGINEER OR OWNER'S REPRESENTATIVE. THE SITE CONTRACTOR SHALL ASSUME RESPONSIBILITY FOR THE MAINTENANCE OF EXISTING EROSION AND SEDIMENTATION CONTROLS AND FOR INSTALLATION OF ANY NEW SEDIMENT AND EROSION CONTROLS AS PER THE SEDIMENT AND EROSION CONTROL PLAN, AT THAT TIME.

49. THE CONTRACTOR SHALL PUMP OUT BUILDING FUEL AND WASTE OIL TANKS (IF ANY ARE ENCOUNTERED) AND REMOVE FUEL TO AN APPROVED DISPOSAL AREA BY A LICENSED WASTE OIL HANDLING CONTRACTOR IN STRICT ACCORDANCE WITH STATE REQUIREMENTS.

50. IF IMPACTED OR CONTAMINATED SOIL IS ENCOUNTERED BY THE CONTRACTOR, THE CONTRACTOR SHALL SUSPEND EXCAVATION WORK OF IMPACTED SOIL AND NOTIFY THE OWNER AND/OR OWNER'S ENVIRONMENTAL CONSULTANT PRIOR TO PROCEEDING WITH FURTHER WORK IN THE IMPACTED SOIL LOCATION UNTIL FURTHER INSTRUCTED BY THE OWNER AND/OR OWNER'S ENVIRONMENTAL CONSULTANT.

51. EXISTING WATER SERVICES SHALL BE DISCONNECTED AND CAPPED AT MAIN IN ACCORDANCE WITH THE REQUIREMENTS OF THE WATER UTILITY PROVIDER. REMOVE EXISTING ONSITE WATER PIPING TO BE ABANDONED TO RIGHT OF WAY LINE UNLESS OTHERWISE SHOWN ON DEMOLITION PLANS OR AS REQUIRED BY THE WATER UTILITY PROVIDER TO BE REMOVED TO MAIN.

52. DOMESTIC GAS SERVICES SHALL BE CAPPED AND SERVICE LINES PURGED OF RESIDUAL GAS IN ACCORDANCE WITH THE GAS UTILITY PROVIDER REQUIREMENTS. WORK TO BE COORDINATED BY AND PAID FOR BY THE CONTRACTOR. REMOVE EXISTING SERVICE PIPING ON SITE. ANY PROPANE TANKS SHALL BE PURGED OF RESIDUAL GAS BY PROPANE SUPPLIER. CONTRACTOR SHALL COORDINATE THIS WORK AND PAY NECESSARY FEES.

53. THE CONTRACTOR SHALL PROVIDE DISCONNECT NOTIFICATION TO THE MUNICIPALITY ENGINEERING DEPARTMENT, TELECOMMUNICATIONS UTILITY PROVIDER, GAS UTILITY PROVIDER, ELECTRIC UTILITY PROVIDER, SANITARY UTILITY PROVIDER, AND WATER UTILITY PROVIDER AT LEAST THREE WEEKS PRIOR TO BEGINNING DEMOLITION.

54. THE CONTRACTOR IS RESPONSIBLE FOR SECURING A DEMOLITION PERMIT FROM UPPER ALLEN TOWNSHIP BUILDING DEPARTMENT AND MUST FURNISH THE REQUIRED APPLICATION MATERIAL AND PAY ALL FEES.

55. BACK FILL DEPRESSIONS, FOUNDATION HOLES AND REMOVED DRIVEWAY AREAS IN LOCATIONS NOT SUBJECT TO FURTHER EXCAVATION WITH SOIL MATERIAL APPROVED BY THE OWNER'S GEOTECHNICAL ENGINEER AND COMPACT, FERTILIZE, SEED AND MULCH DISTURBED AREAS NOT SUBJECT TO FURTHER SITE CONSTRUCTION. DEMOLISHED BUILDING FOUNDATION AREA AND BASEMENT IF PRESENT TO BE BACKFILLED WITH GRAVEL FILL OR MATERIAL SPECIFIED IN THE PROJECT GEOTECHNICAL REPORT IN LIFT THICKNESS SPECIFIED IN THE GEOTECHNICAL REPORT, COMPACT TO 95% MAX. DRY DENSITY PER ASTM D1557 AT MOISTURE CONTENT SPECIFIED IN GEOTECHNICAL REPORT AND EARTHWORK SPECIFICATION. EMPLOY WATERING EQUIPMENT FOR DUST CONTROL.

56. THE CONTRACTOR SHALL REPAIR PAVEMENTS BY INSTALLING TEMPORARY AND PERMANENT PAVEMENTS IN PUBLIC RIGHTS OF WAYS AS REQUIRED BY LOCAL GOVERNING AUTHORITIES AND THE MUNICIPALITY AND PER PERMIT REQUIREMENTS DUE TO DEMOLITION AND PIPE REMOVAL ACTIVITIES. ALL WORK WITHIN THE PUBLIC STREET RIGHTS-OF-WAY AND WORK RELATED TO STORM DRAINAGE AND SANITARY SEWER FACILITIES REQUIRED TO BE INSPECTED BY TOWNSHIP. CONTRACTOR TO PROVIDE A MINIMUM 48 HOUR NOTICE TO TOWNSHIP PRIOR TO STARTING WORK.

57. THE CONTRACTOR SHALL CUT AND REMOVE AT LUMINARE AND SIGN LOCATIONS ANY PROTRUDING CONDUITS TO 24" BELOW GRADE. THE CONTRACTOR SHALL REMOVE ALL CABLE AND CONDUCTORS FROM REMAINING LIGHTING AND SIGNING CONDUITS TO BE ABANDONED. ANY REMAINING LIGHTING TO REMAIN IN PLACE SHALL BE REICRCUITED OR REWIRED AS NECESSARY TO REMAIN IN OPERATION.

58. NO WORK ON THIS SITE SHALL BE INITIATED BY THE CONTRACTOR UNTIL A PRE-CONSTRUCTION MEETING WITH UPPER ALLEN TOWNSHIP ENGINEER, CUMBERLAND COUNTY CONSERVATION DISTRICT, CCCD, OWNER AND THE CIVIL ENGINEER IS SCHEDULED AT LEAST 48 HOURS PRIOR TO START OF SITE CONSTRUCTION ACTIVITIES. THE CONTRACTOR SHOULD BE AWARE OF ANY SITE INFORMATION AVAILABLE SUCH AS GEOTECHNICAL AND ENVIRONMENTAL REPORTS. THE CONTRACTOR SHALL HAVE PENNSYLVANIA811 MARK OUTS OF EXISTING UTILITIES COMPLETED PRIOR TO MEETING.

59. THE CONTRACTOR SHALL ARRANGE FOR AND INSTALL TEMPORARY OR PERMANENT UTILITY CONNECTIONS WHERE INDICATED ON PLAN OR AS REQUIRED. MAINTAIN UTILITY SERVICES TO BUILDINGS OR TO SERVICES TO REMAIN. CONTRACTOR TO COORDINATE WITH UTILITY PROVIDERS FOR INSTALLATION AND PAY UTILITY PROVIDER FEES.

60. THE CONTRACTOR SHALL NOT COMMENCE DEMOLITION OR UTILITY DISCONNECTIONS UNTIL AUTHORIZED TO DO SO BY THE OWNER.

61. THE CONTRACTOR OR DEMOLITION CONTRACTOR SHALL INSTALL TEMPORARY SHEETING OR SHORING AS NECESSARY TO PROTECT EXISTING AND NEW BUILDINGS, STRUCTURES AND UTILITIES DURING CONSTRUCTION AND DEMOLITION. SHEETING OR SHORING SHALL BE DESIGNED BY A PROFESSIONAL ENGINEER, LICENSED IN THIS STATE AND EVIDENCE OF SUCH SUBMITTED TO THE OWNER PRIOR TO INSTALLATION.

62. NO SALVAGE SHALL BE PERMITTED UNLESS PAID TO THE OWNER AS A CREDIT.

63. ANY EXISTING POTABLE WELL AND ANY EXISTING SEPTIC TANKS/ABSORPTION AREAS SHALL BE ABANDONED AND REMOVED PER THE PA DEP AND HEALTH CODE REQUIREMENTS.

64. THE CONTRACTOR SHALL PRESERVE EXISTING VEGETATION WHERE POSSIBLE AND/OR AS NOTED ON DRAWINGS. REFER TO SEDIMENT AND EROSION CONTROL PLAN FOR LIMIT OF DISTURBANCE AND EROSION CONTROL NOTES.

65. TOPSOIL SHALL BE STRIPPED AND STOCKPILED ON SITE FOR USE IN FINAL LANDSCAPING.

66. SUBGRADE SHALL BE FORMED WITH REMOVAL AND REPLACEMENT OF FILL AND REMOVAL AND REPLACEMENT OF UNSUITABLE AND SOFT SUBGRADE MATERIAL AS REQUIRED BY THE GEOTECHNICAL ENGINEER. SEE GEOTECHNICAL REPORT AND EARTHWORK SPECIFICATIONS FOR FURTHER DESCRIPTION.

67. THE CONTRACTOR SHALL COMPACT FILL IN LIFT THICKNESS PER THE GEOTECHNICAL REPORT UNDER ALL PARKING, BUILDING, DRIVE, AND STRUCTURE AREAS TO 95% OF THE MAXIMUM DRY DENSITY AS DETERMINED BY ASTM D1557 (MODIFIED PROCTOR TEST), OR AS REQUIRED BY THE GEOTECHNICAL ENGINEER.

68. UNDERDRAINS SHALL BE ADDED, IF DETERMINED NECESSARY IN THE FIELD BY THE OWNER/GEOTECHNICAL ENGINEER, AFTER SUBGRADE IS ROUGH GRADED.

69. HORIZONTAL DATUM IS NAVD 88 PA SOUTH GRID AND VERTICAL DATUM IS NAVD 88.

70. CLEARING LIMITS SHALL BE PHYSICALLY MARKED IN THE FIELD AND APPROVED BY THE CUMBERLAND COUNTY CONSERVATION DISTRICT (CCCD) AGENT PRIOR TO THE START OF WORK ON THE SITE.

71. PROPER CONSTRUCTION PROCEDURES SHALL BE FOLLOWED ON ALL IMPROVEMENTS WITHIN THIS PARCEL SO AS TO PREVENT THE SILTING OF ANY WATERCOURSE OR WETLANDS IN ACCORDANCE WITH THE REGULATIONS OF THE PADEP AND THE PADEP EROSION AND SEDIMENT POLLUTION CONTROL PROGRAM MANUAL, LATEST EDITION. IN ADDITION, THE CONTRACTOR SHALL STRICTLY ADHERE TO THE SEDIMENT AND EROSION CONTROL PLAN CONTAINED HEREIN. THE CONTRACTOR SHALL BE RESPONSIBLE TO POST ALL BONDS AS REQUIRED BY THE LOCAL MUNICIPALITIES, OR CUMBERLAND COUNTY CONSERVATION DISTRICT (CCCD) WHICH WOULD GUARANTEE THE PROPER IMPLEMENTATION OF THE PLAN.

72. ALL SITE WORK, MATERIALS OF CONSTRUCTION, AND CONSTRUCTION METHODS FOR EARTHWORK AND STORM DRAINAGE WORK SHALL CONFORM TO THE SPECIFICATIONS AND DETAILS AND APPLICABLE SECTIONS OF THE PROJECT SPECIFICATIONS MANUAL OTHERWISE THIS WORK SHALL CONFORM TO THE STATE DEPARTMENT OF TRANSPORTATION SPECIFICATIONS AND PROJECT GEOTECHNICAL REPORT IF THERE IS NO PROJECT SPECIFICATIONS MANUAL. ALL FILL MATERIAL UNDER STRUCTURES AND PAVED AREAS SHALL BE PER THE ABOVE STATED APPLICABLE SPECIFICATIONS, AND/OR PROJECT GEOTECHNICAL REPORT, AND SHALL BE PLACED IN ACCORDANCE WITH THE APPLICABLE SPECIFICATIONS UNDER THE SUPERVISION OF A QUALIFIED PROFESSIONAL ENGINEER. MATERIAL SHALL BE COMPACTED IN LIFT THICKNESSES PER THE PROJECT GEOTECHNICAL REPORT TO 95% OF THE MAXIMUM DRY DENSITY AS DETERMINED BY ASTM D 1557 AT MOISTURE CONTENT INDICATED IN PROJECT GEOTECHNICAL REPORT.

73. ALL DISTURBANCE INCURRED TO MUNICIPAL, COUNTY, AND STATE PROPERTY DUE TO CONSTRUCTION SHALL BE RESTORED TO ITS PREVIOUS CONDITION OR BETTER, TO THE SATISFACTION OF THE MUNICIPALITY, COUNTY AND STATE AS APPLICABLE FOR THE LOCATION OF THE WORK.

74. ALL CONSTRUCTION WITHIN A DOT RIGHT OF WAY SHALL COMPLY WITH ALL DEPARTMENT OF TRANSPORTATION STANDARDS AND SPECIFICATIONS.

75. THE UTILITY PLAN DETAILS SITE INSTALLED PIPES UP TO 5' FROM THE BUILDING FACE. REFER TO DRAWINGS BY MEISTER-COX ARCHITECTS FOR BUILDING CONNECTIONS. SITE CONTRACTOR SHALL SUPPLY AND INSTALL PIPE ADAPTERS AS NECESSARY AT BUILDING CONNECTION POINT OR AT EXISTING UTILITY OR PIPE CONNECTION POINT.

76. THE CONTRACTOR SHALL VISIT THE SITE AND VERIFY THE ELEVATION AND LOCATION OF ALL UTILITIES BY VARIOUS MEANS PRIOR TO BEGINNING ANY EXCAVATION. TEST PITS SHALL BE DUG AT ALL LOCATIONS WHERE PROPOSED SANITARY SEWERS AND WHERE PROPOSED STORM PIPING WILL CROSS EXISTING UTILITIES, AND THE HORIZONTAL AND VERTICAL LOCATIONS OF THE UTILITIES SHALL BE DETERMINED. THE CONTRACTOR SHALL CONTACT THE CIVIL ENGINEER IN THE EVENT OF ANY DISCOVERED OR UNFORESEEN CONFLICTS BETWEEN EXISTING AND PROPOSED SANITARY SEWERS, STORM PIPING AND UTILITIES SO THAT AN APPROPRIATE MODIFICATION MAY BE MADE.

77. UTILITY CONNECTION DESIGN AS REFLECTED ON THE PLAN MAY CHANGE SUBJECT TO UTILITY PROVIDER AND GOVERNING AUTHORITY STAFF REVIEW.

78. THE CONTRACTOR SHALL ENSURE THAT ALL UTILITY PROVIDERS AND GOVERNING AUTHORITY STANDARDS FOR MATERIALS AND CONSTRUCTION METHODS ARE MET. THE CONTRACTOR SHALL PERFORM PROPER COORDINATION WITH THE RESPECTIVE UTILITY PROVIDER.

79. THE CONTRACTOR SHALL ARRANGE FOR AND COORDINATE WITH THE RESPECTIVE UTILITY PROVIDERS FOR SERVICE INSTALLATIONS AND CONNECTIONS. THE CONTRACTOR SHALL COORDINATE WORK TO BE PERFORMED BY THE VARIOUS UTILITY PROVIDERS AND SHALL PAY ALL FEES FOR CONNECTIONS, DISCONNECTIONS, RELOCATIONS, INSPECTIONS, AND DEMOLITION UNLESS OTHERWISE STATED IN THE PROJECT SPECIFICATIONS MANUAL AND/OR GENERAL CONDITIONS OF THE CONTRACT.

80. ALL EXISTING PAVEMENT WHERE UTILITY PIPING IS TO BE INSTALLED SHALL BE SAW CUT. AFTER UTILITY INSTALLATION IS COMPLETED, THE CONTRACTOR SHALL INSTALL TEMPORARY AND/OR PERMANENT PAVEMENT REPAIR AS DETAILED ON THE DRAWINGS OR AS REQUIRED BY THE OWNER HAVING JURISDICTION.

81. ALL PIPES SHALL BE LAID ON STRAIGHT ALIGNMENTS AND EVEN GRADES USING A PIPE LASER OR OTHER ACCURATE METHOD.

82. SANITARY LATERAL SHALL MAINTAIN (10' MIN. HORIZONTAL 1.5' VERTICAL MIN.) SEPARATION DISTANCE FROM WATER LINES, OR ADDITIONAL PROTECTION MEASURES WILL BE REQUIRED WHERE PERMITTED, WHICH SHALL INCLUDE CONCRETE ENCASEMENT OF PIPING UNLESS OTHERWISE DIRECTED BY THE UTILITY PROVIDERS AND CIVIL ENGINEER.

83. RELOCATION OF UTILITY PROVIDER FACILITIES SHALL BE DONE IN ACCORDANCE WITH THE REQUIREMENTS OF THE UTILITY PROVIDER.

84. THE CONTRACTOR SHALL COMPACT THE PIPE BACKFILL IN 8" LIFTS ACCORDING TO THE PIPE BEDDING DETAILS. TRENCH BOTTOM SHALL BE STABLE IN HIGH GROUNDWATER AREAS. A PIPE FOUNDATION SHALL BE USED PER THE TRENCH DETAILS AND IN AREAS OF ROCK EXCAVATION.

85. CONTRACTOR TO PROVIDE STEEL SLEEVES AND ANNULAR SPACE SAND FILL FOR UTILITY PIPE AND CONDUIT CONNECTIONS UNDER FOOTINGS.

86. BUILDING UTILITY PENETRATIONS AND LOCATIONS ARE SHOWN FOR THE CONTRACTOR'S INFORMATION AND SHALL BE VERIFIED WITH THE BUILDING MEP, STRUCTURAL, AND ARCHITECTURAL DRAWINGS AND WITH THE OWNER'S CONSTRUCTION MANAGER.

87. ALL UTILITY CONSTRUCTION IS SUBJECT TO INSPECTION FOR APPROVAL PRIOR TO BACKFILLING, IN ACCORDANCE WITH THE APPROPRIATE UTILITY PROVIDER REQUIREMENTS.

88. A ONE-FOOT MINIMUM VERTICAL CLEARANCE BETWEEN WATER, GAS, ELECTRICAL, AND TELEPHONE LINES AND STORM PIPING SHALL BE PROVIDED. A SIX-INCH MINIMUM CLEARANCE SHALL BE MAINTAINED BETWEEN STORM PIPING AND SANITARY SEWER WITH A CONCRETE ENCASEMENT. AN 18-INCH TO 6-INCH VERTICA

LEGEND

- PROPERTY LINE
- R.O.W./EASEMENT LINE
- 50 — CONTOUR
- W — WATER LINE
- E — ELECTRIC LINE
- S — SANITARY SEWER LINE
- OVERHEAD WIRES
- X — FENCE
- SS — COMPOST FILTER SOCK
- UTILITY POLE & GUY WIRE
- LIGHT POLE
- CATCH BASIN
- SANITARY SEWER MANHOLE
- Co — SANITARY SEWER CLEANOUT
- FH — HYDRANT
- WV — WATER VALVE
- SIGN
- BOLLARD
- TREE/SHRUBS
- EXISTING BITUMINOUS PAVEMENT TO BE REMOVED
- LOD — LIMIT OF DISTURBANCE
- SAWCUT LINE

BENCHMARK #1:
EAST PROPERTY CORNER, CONCRETE MONUMENT
ELEVATION=459.18

BENCHMARK #2:
NORTH-EAST PROPERTY CORNER, IRON PIN
ELEVATION=453.76

BENCHMARK #3:
NORTH PROPERTY, CONCRETE MONUMENT
ELEVATION=452.43

BENCHMARK #4:
NORTH-WEST PROPERTY CORNER, IRON PIN
ELEVATION=450.10

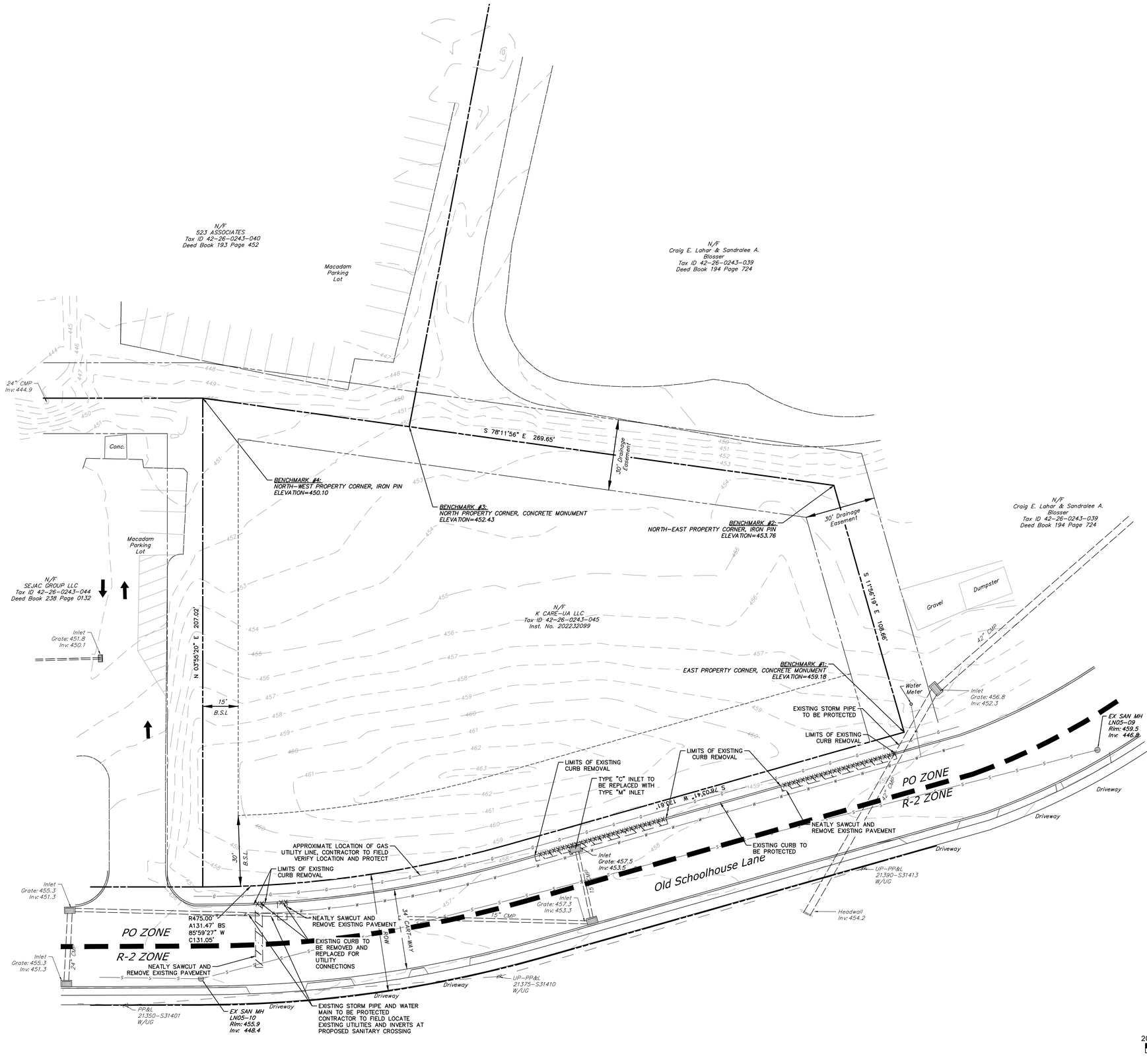

811 Know what's below. Call before you dig.

PENNSYLVANIA ACT 287 (1974) AS AMENDED BY PENNSYLVANIA ACT 199 (2004) REQUIRES NO LESS THAN THREE (3) WORKING DAYS AND NO MORE THAN (10) WORKING DAYS NOTICE TO UTILITIES BEFORE YOU EXCAVATE, DRILL, BLAST OR DEMOLISH. PA ONE-CALL SERIAL NO. 20231515029

© 2024 BL COMPANIES, INC. THESE DRAWINGS SHALL NOT BE UTILIZED BY ANY PERSON, FIRM OR CORPORATION WITHOUT THE SPECIFIC WRITTEN PERMISSION OF BL COMPANIES.

FOR PERMITTING PURPOSES ONLY NOT RELEASED FOR CONSTRUCTION

Architecture
Engineering
Environmental
Land Surveying

BL Companies

2601 Market Place
Suite 350
Harrisburg, PA 17110
(717) 943-1665

GENIUS KIDS
CHILD DEVELOPMENT CENTER
PLAY. LEARN. GROW.

PRELIMINARY/FINAL LAND DEVELOPMENT PLAN

PROPOSED K CARE - UA (GENIUS KIDS)

OLD SCHOOLHOUSE LANE
UPPER ALLEN TOWNSHIP, CUMBERLAND COUNTY, PA

REVISIONS		
No.	Date:	Desc:
1	09/29/2023	PER TOWNSHIP SKETCH PLAN COMMENTS
2	01/04/2024	PER TOWNSHIP PLAN REVIEW COMMENTS
3	01/24/2024	PER TOWNSHIP PLAN REVIEW COMMENTS
4	02/12/2024	PER TOWNSHIP PLAN REVIEW COMMENTS

Designed	C.L.H.
Drawn	N.M.
Reviewed	A.J.B.
Scale	1" = 20'
Project No.	2202027
Date	07/31/23
CAD File:	EX220202701

Title

EXISTING CONDTIONS & DEMOLITION PLAN

Sheet No.

EX-1
No.03of 19

2/12/2024, CHERIMOY, O:\K-CARE\2022\2202027\CIVIL\EX\2202027EX1.DWG, EX-1

LEGEND

- PROPERTY LINE
- SIGN
- X — X — 4' PERIMETER FENCING
- STANDARD DUTY ASPHALT PAVEMENT ON SITE
- STANDARD DUTY ASPHALT PAVEMENT PUBLIC RIGHT OF WAY
- CONCRETE
- CLEAR SIGHT TRIANGLE AREA
- SITE LIGHTING (LIGHT POLE IN GRASSED AREAS)

SIGN LEGEND

NO.	DOT NO./ SIGN SIZE	LEGEND
A	R1-1 24"x24"	STOP
B	R7-8D 12"x18"	RESERVED PARKING VAN ACCESSIBLE
C	R7-8A 6"x12"	VAN ACCESSIBLE
D	R7-8F 12"x18"	VIOLATORS SUBJECT TO FINE AND TOWING CALL FIRE DEPT. NUMBER
E	R7-8F 18"x12"	Employee Parking

SIGHT DISTANCE ANALYSIS

Movement	Direction	Posted Speed (mph)	Grade[1]	Sight Distances (feet) SSSD	Sight Distances (feet) EXIST
Old Schoolhouse Lane & Proposed Site Access (West)					
Exiting Movements	To the left	25	-1%	148'	250'
	To the right	25	+1%	145'	500'+
Entering Left Turns	Approaching same direction	25	+1%	145'	500'+
	Approaching opposite direction	25	-1%	148'	280'
Old Schoolhouse Lane & Proposed Site Access (East)					
Exiting Movements	To the left	25	-1%	148'	165'
	To the right	25	+1%	145'	500'+
Entering Left Turns	Approaching same direction	25	+1%	145'	500'+
	Approaching opposite direction	25	-1%	148'	165'

EXIST = Existing (measured) Sight Distance SSSD = PennDOT & Township Safe Stopping Sight Distance
1 = Roadway Grade Approaching Access

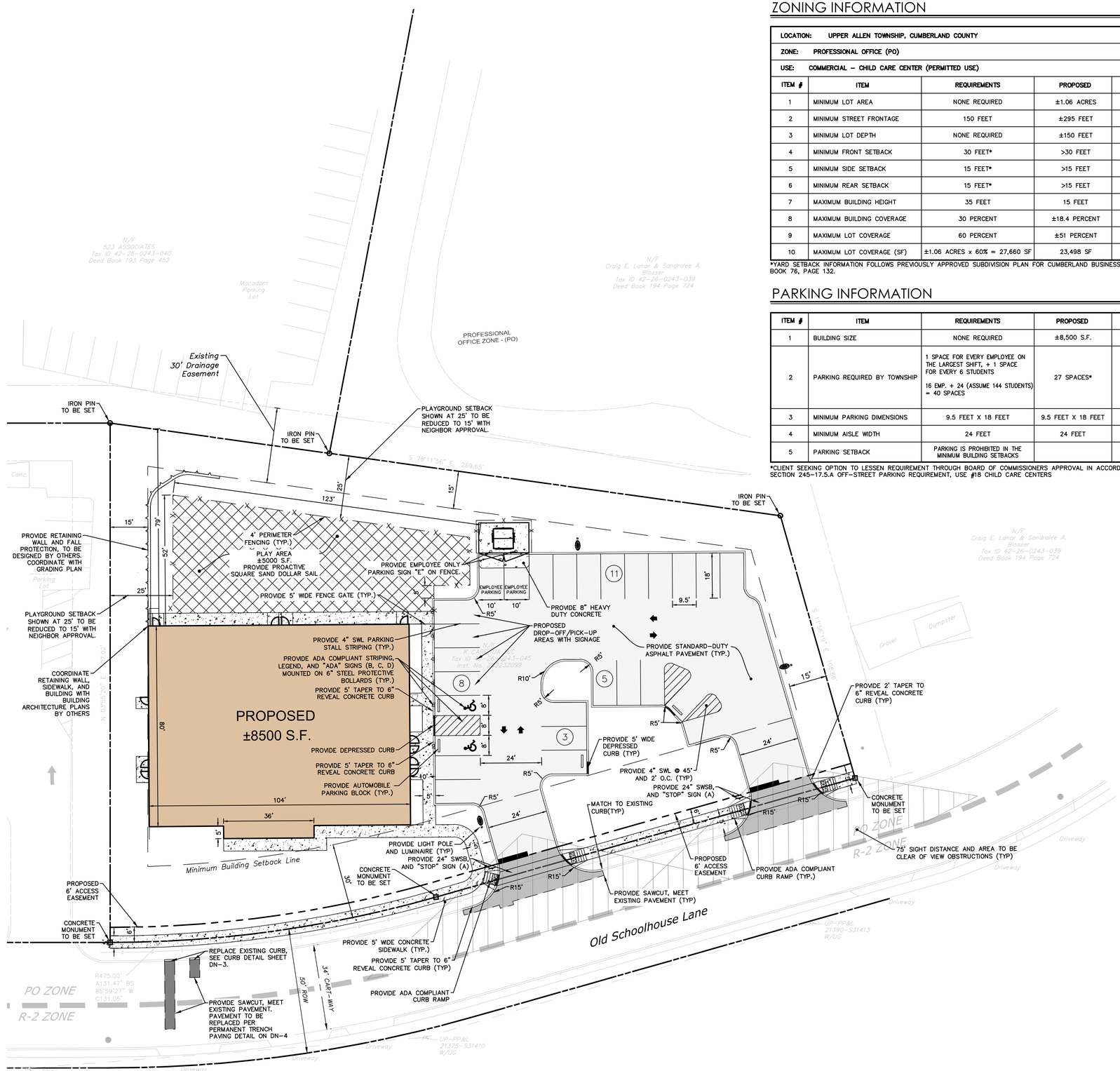

ZONING INFORMATION

LOCATION:	**UPPER ALLEN TOWNSHIP, CUMBERLAND COUNTY**
ZONE:	**PROFESSIONAL OFFICE (PO)**
USE:	**COMMERCIAL – CHILD CARE CENTER (PERMITTED USE)**

ITEM #	ITEM	REQUIREMENTS	PROPOSED	VARIANCE
1	MINIMUM LOT AREA	NONE REQUIRED	±1.06 ACRES	NO
2	MINIMUM STREET FRONTAGE	150 FEET	±295 FEET	NO
3	MINIMUM LOT DEPTH	NONE REQUIRED	±150 FEET	NO
4	MINIMUM FRONT SETBACK	30 FEET*	>30 FEET	NO
5	MINIMUM SIDE SETBACK	15 FEET*	>15 FEET	NO
6	MINIMUM REAR SETBACK	15 FEET*	>15 FEET	NO
7	MAXIMUM BUILDING HEIGHT	35 FEET	15 FEET	NO
8	MAXIMUM BUILDING COVERAGE	30 PERCENT	±18.4 PERCENT	NO
9	MAXIMUM LOT COVERAGE	60 PERCENT	±51 PERCENT	NO
10	MAXIMUM LOT COVERAGE (SF)	±1.06 ACRES x 60% = 27,660 SF	23,498 SF	NO

*YARD SETBACK INFORMATION FOLLOWS PREVIOUSLY APPROVED SUBDIVISION PLAN FOR CUMBERLAND BUSINESS PARKING, BOOK 76, PAGE 132.

PARKING INFORMATION

ITEM #	ITEM	REQUIREMENTS	PROPOSED	VARIANCE
1	BUILDING SIZE	NONE REQUIRED	±8,500 S.F.	NO
2	PARKING REQUIRED BY TOWNSHIP	1 SPACE FOR EVERY EMPLOYEE ON THE LARGEST SHIFT, + 1 SPACE FOR EVERY 6 STUDENTS 16 EMP. + 24 (ASSUME 144 STUDENTS) = 40 SPACES	27 SPACES*	NO
3	MINIMUM PARKING DIMENSIONS	9.5 FEET X 18 FEET	9.5 FEET X 18 FEET	NO
4	MINIMUM AISLE WIDTH	24 FEET	24 FEET	NO
5	PARKING SETBACK	PARKING IS PROHIBITED IN THE MINIMUM BUILDING SETBACKS		NO

*CLIENT SEEKING OPTION TO LESSEN REQUIREMENT THROUGH BOARD OF COMMISSIONERS APPROVAL IN ACCORDANCE WITH SECTION 245-17.5.A OFF-STREET PARKING REQUIREMENT, USE #16 CHILD CARE CENTERS

GRAPHIC SCALE
20 10 0 20
SCALE IN FEET

Know what's below. Call before you dig.

PENNSYLVANIA ACT 287 (1974) AS AMENDED BY PENNSYLVANIA ACT 199 (2004) REQUIRES NO LESS THAN THREE (3) WORKING DAYS AND NO MORE THAN (10) WORKING DAYS NOTICE TO UTILITIES BEFORE YOU EXCAVATE, DRILL, BLAST OR DEMOLISH. PA ONE-CALL SERIAL NO. 20231515029

© 2024 BL COMPANIES, INC. THESE DRAWINGS SHALL NOT BE UTILIZED BY ANY PERSON, FIRM OR CORPORATION WITHOUT THE SPECIFIC WRITTEN PERMISSION OF BL COMPANIES.

FOR PERMITTING PURPOSES ONLY NOT RELEASED FOR CONSTRUCTION

Architecture
Engineering
Environmental
Land Surveying
BL Companies
2601 Market Place
Suite 350
Harrisburg, PA 17110
(717) 943-1665

GENIUS KIDS CHILD DEVELOPMENT CENTER PLAY LEARN GROW

PRELIMINARY/FINAL LAND DEVELOPMENT PLAN

PROPOSED K CARE - UA (GENIUS KIDS)

OLD SCHOOLHOUSE LANE
UPPER ALLEN TOWNSHIP, CUMBERLAND COUNTY, PA

REVISIONS No.	Date	Desc.
1	09/29/2023	PER TOWNSHIP SKETCH PLAN COMMENTS
2	01/04/2024	PER TOWNSHIP PLAN REVIEW COMMENTS
3	01/24/2024	PER TOWNSHIP PLAN REVIEW COMMENTS
4	02/12/2024	PER TOWNSHIP PLAN REVIEW COMMENTS

Designed	C.L.H.
Drawn	N.M.
Reviewed	A.J.B.
Scale	1" = 20'
Project No.	2202027
Date	07/31/23
CAD File:	SP2202027O1

Title
SITE PLAN

Sheet No.
SP-1
No.04of 19

2/12/2024, C:\DESIGN\JOBS\2022\2202027\CIVIL\SP2202027O1.DWG, SP-1

LEGEND

LOD	LIMIT OF DISTURBANCE
NPDES	NPDES BOUNDARY
	PROPERTY LINE
	BENCHMARK
50	EXISTING GRADES
443.7	PROPOSED GRADE BREAK
444	PROPOSED 1' GRADES
445	PROPOSED 5' GRADES
×447.50	SPOT GRADES
	STORM LINE
	"M" TYPE CATCH BASIN
	"C" TYPE CATCH BASIN
	STORM MANHOLE
	INFILTRATION TEST PIT
	STORMWATER EASMENT
TC	TOP OF CURB
BC	BOTTOM OF CURB
TW	TOP OF WALL
BW	BOTTOM OF WALL
	SOIL BOUNDARY

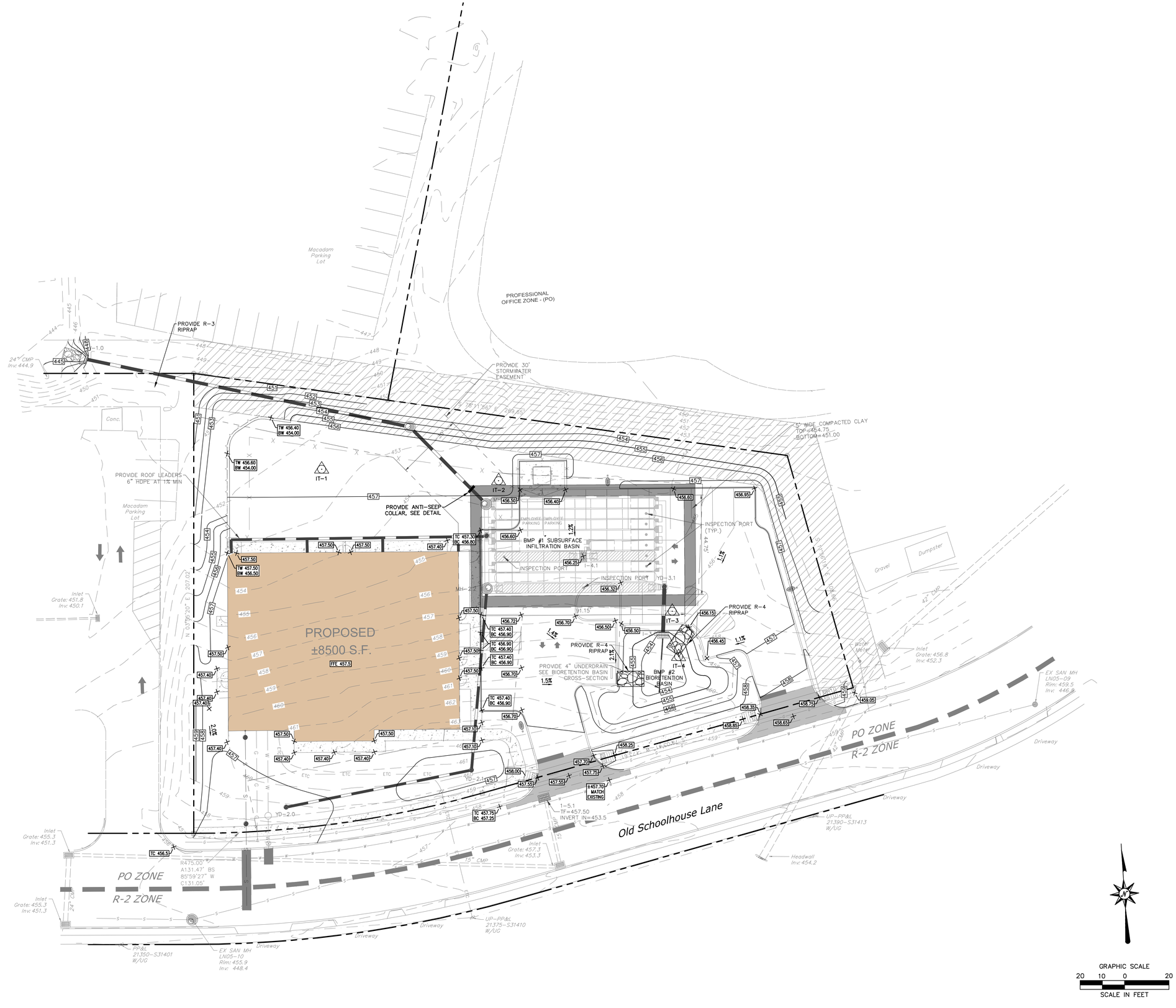

811 Know what's below. Call before you dig.

PENNSYLVANIA ACT 287 (1974) AS AMENDED BY PENNSYLVANIA ACT 199 (2004) REQUIRES NO LESS THAN THREE (3) WORKING DAYS AND NO MORE THAN (10) WORKING DAYS NOTICE TO UTILITIES BEFORE YOU EXCAVATE, DRILL, BLAST OR DEMOLISH. PA ONE-CALL SERIAL NO. 20231515029

BL Companies
Architecture
Engineering
Environmental
Land Surveying

2601 Market Place
Suite 350
Harrisburg, PA 17110
(717) 943-1665

GENIUS KIDS CHILD DEVELOPMENT CENTER PLAY LEARN GROW

PRELIMINARY/FINAL LAND DEVELOPMENT PLAN

PROPOSED K CARE - UA (GENIUS KIDS)

OLD SCHOOLHOUSE LANE
UPPER ALLEN TOWNSHIP, CUMBERLAND COUNTY, PA

REVISIONS

No.	Date	Desc.
1	09/29/2023	PER TOWNSHIP SKETCH PLAN COMMENTS
2	01/04/2024	PER TOWNSHIP PLAN REVIEW COMMENTS
3	01/24/2024	PER TOWNSHIP PLAN REVIEW COMMENTS
4	02/12/2024	PER TOWNSHIP PLAN REVIEW COMMENTS

Designed	C.L.H.
Drawn	N.M.
Reviewed	A.J.B.
Scale	1" = 20'
Project No.	2202027
Date	07/31/23
CAD File:	GD220202701

Title
GRADING AND DRAINAGE PLAN

Sheet No.
GD-1
No.05of 19

© 2024 BL COMPANIES, INC. THESE DRAWINGS SHALL NOT BE UTILIZED BY ANY PERSON, FIRM OR CORPORATION WITHOUT THE SPECIFIC WRITTEN PERMISSION OF BL COMPANIES.

FOR PERMITTING PURPOSES ONLY NOT RELEASED FOR CONSTRUCTION

LEGEND

- NPDES — NPDES BOUNDARY LINE
- LOD — LIMIT OF DISTURBANCE
- PROPERTY LINE
- R.O.W.
- W — W — WATER LINE
- S — S — SANITARY SEWER PIPE
- G — G — GAS LINE
- E — E — UNDERGROUND ELECTRIC LINE
- WATER VALVE
- SANITARY SEWER MANHOLE
- SANITARY CLEANOUT
- ELECTRIC AND TELECOMMUNICATION POLE

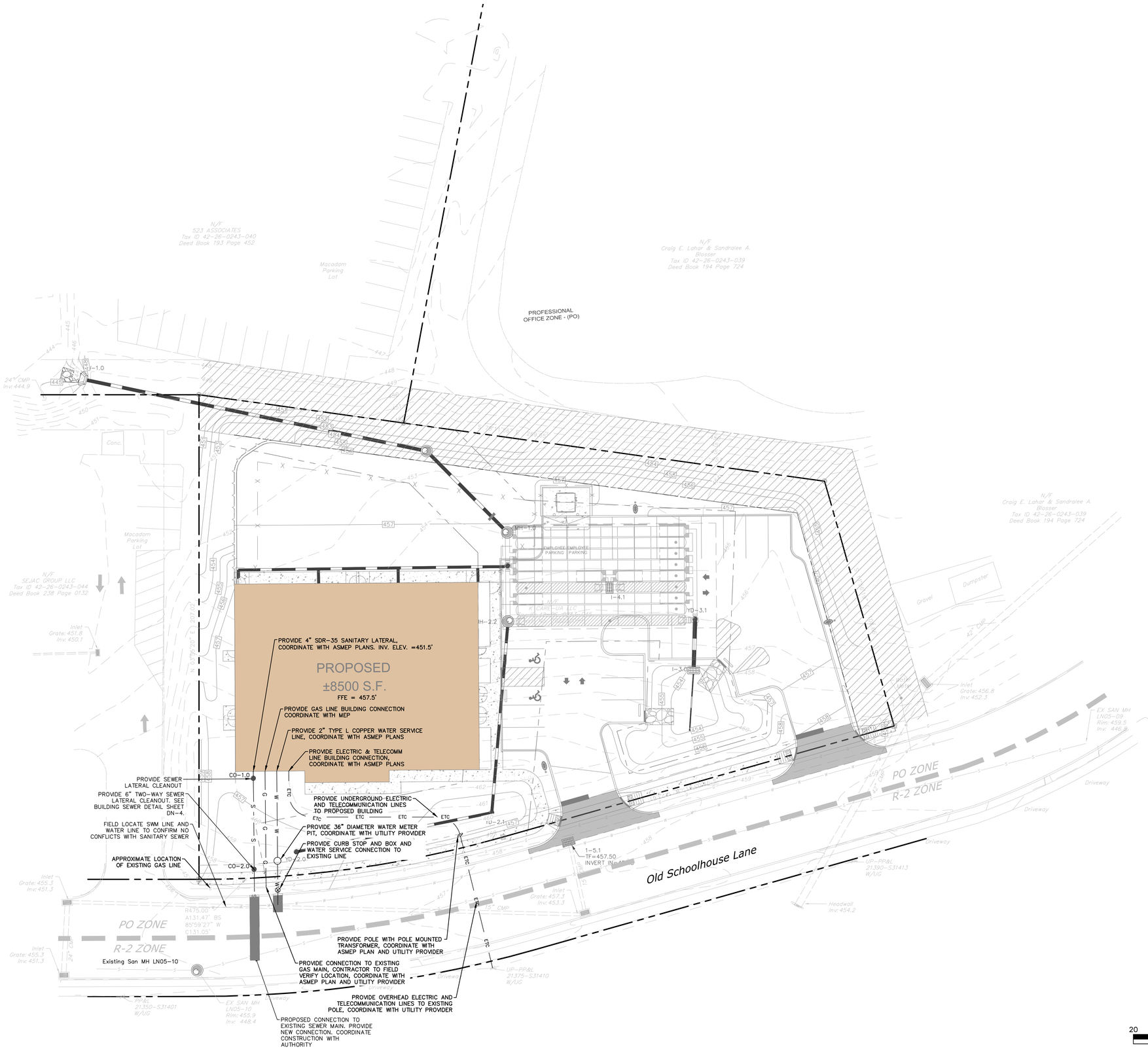

811 Know what's below. Call before you dig.

PENNSYLVANIA ACT 287 (1974) AS AMENDED BY PENNSYLVANIA ACT 199 (2004) REQUIRES NO LESS THAN THREE (3) WORKING DAYS AND NO MORE THAN (10) WORKING DAYS NOTICE TO UTILITIES BEFORE YOU EXCAVATE, DRILL, BLAST OR DEMOLISH. PA ONE-CALL SERIAL NO. 20231515029

© 2024 BL COMPANIES, INC. THESE DRAWINGS SHALL NOT BE UTILIZED BY ANY PERSON, FIRM OR CORPORATION WITHOUT THE SPECIFIC WRITTEN PERMISSION OF BL COMPANIES.

FOR PERMITTING PURPOSES ONLY NOT RELEASED FOR CONSTRUCTION

Architecture
Engineering
Environmental
Land Surveying

BL Companies

2601 Market Place
Suite 350
Harrisburg, PA 17110
(717) 943-1665

GENIUS KIDS
CHILD DEVELOPMENT CENTER
PLAY. LEARN. GROW.

PRELIMINARY/FINAL LAND DEVELOPMENT PLAN

PROPOSED K CARE - UA (GENIUS KIDS)

OLD SCHOOLHOUSE LANE
UPPER ALLEN TOWNSHIP, CUMBERLAND COUNTY, PA

REVISIONS

No.	Date	Desc.
1	09/29/2023	PER TOWNSHIP SKETCH PLAN COMMENTS
2	01/04/2024	PER TOWNSHIP PLAN REVIEW COMMENTS
3	01/24/2024	PER TOWNSHIP PLAN REVIEW COMMENTS
4	02/12/2024	PER TOWNSHIP PLAN REVIEW COMMENTS

Designed	C.L.H.
Drawn	N.M.
Reviewed	A.J.B.
Scale	1" = 20'
Project No.	2200207
Date	07/31/23
CAD File:	SU220202701

Title

SITE UTILITIES PLAN

Sheet No.

SU-1
No.06of 19

2/12/2024, C:\DRAWINGS\2200207\CIVIL\SU220202701.DWG,SU-1

STORM: MH-1.0 to EW-1.0

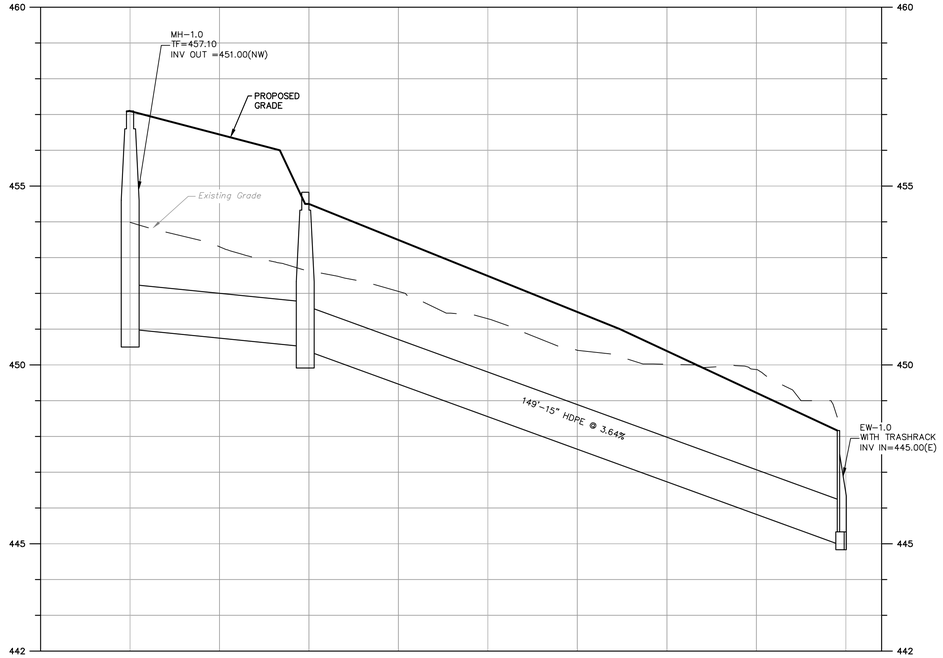

STORM: YD-2.0 to MH-2.2

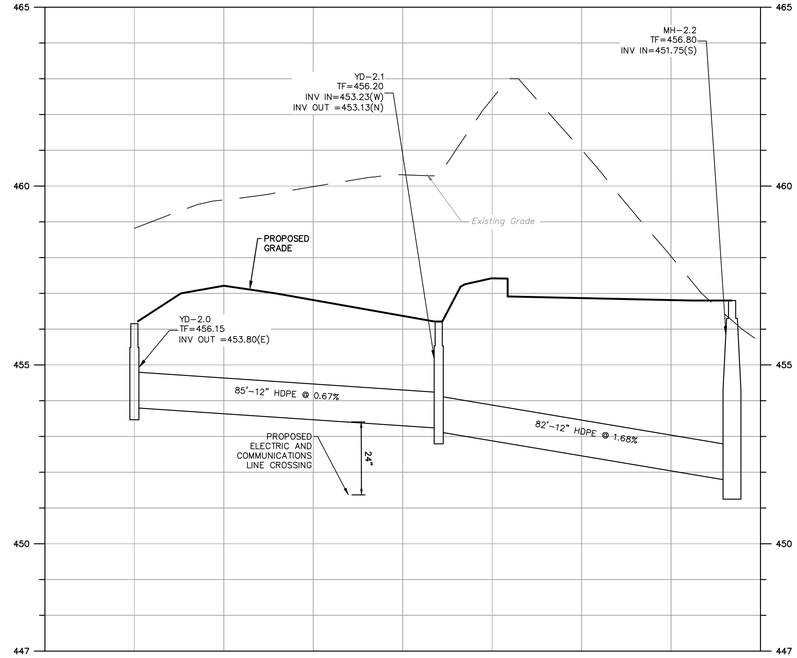

STORM: I-3.0 to ADS SYSTEM

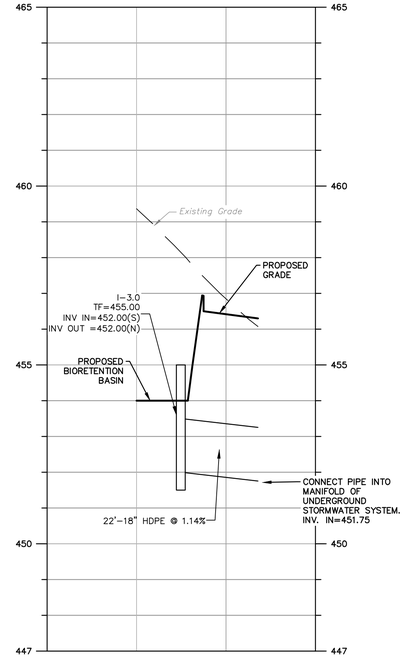

SANITARY SEWER: BUILDING TO SEWER MAIN

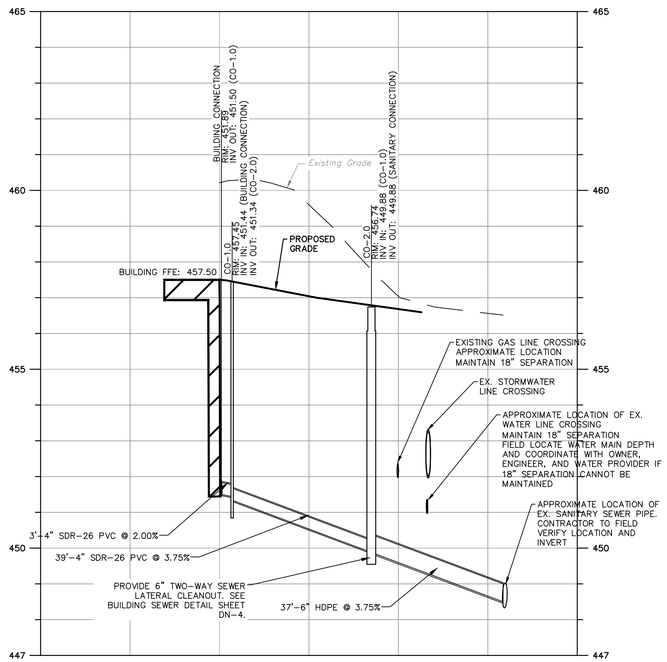

BIORETENTION BASIN TO EW-1.0

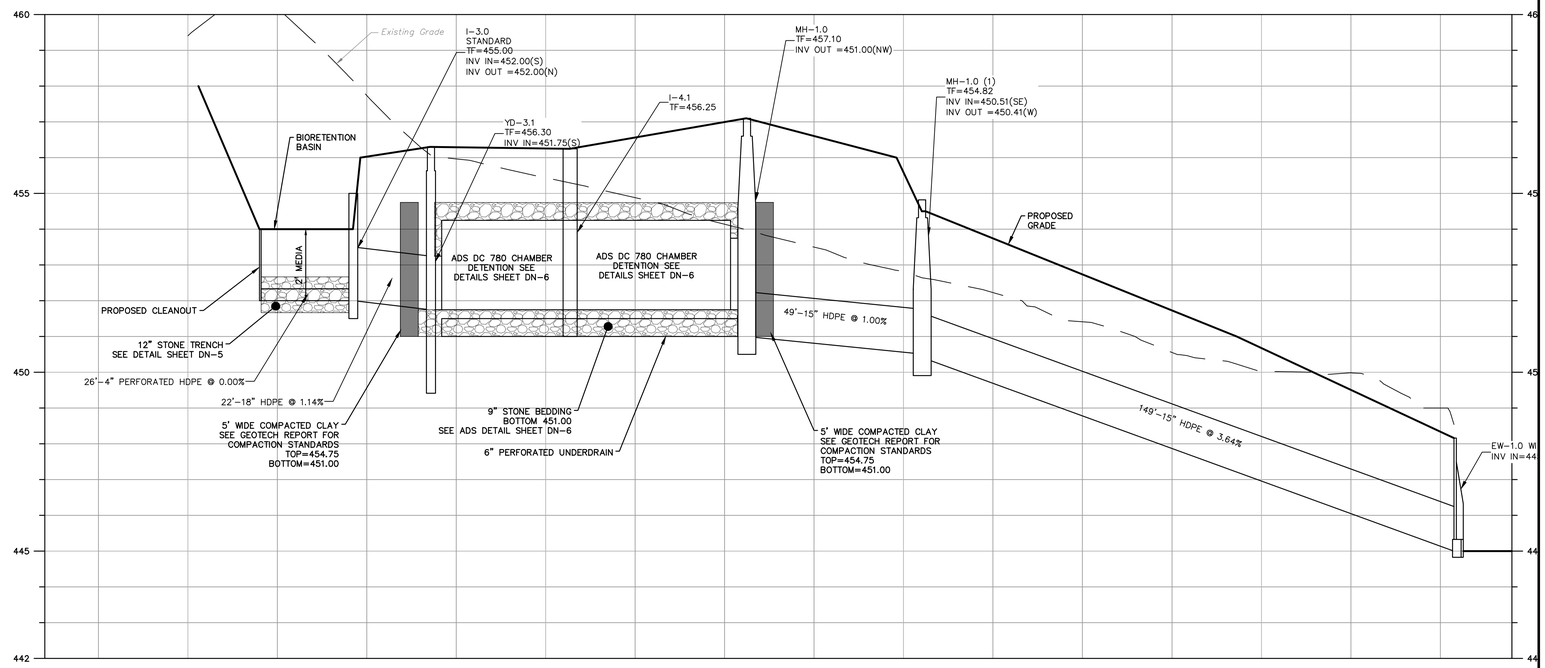

VERTICAL GRAPHIC SCALE
2 1 0 2
SCALE IN FEET

HORIZONTAL GRAPHIC SCALE
20 10 0 20
SCALE IN FEET

© 2024 BL COMPANIES, INC. THESE DRAWINGS SHALL NOT BE UTILIZED BY ANY PERSON, FIRM OR CORPORATION WITHOUT THE SPECIFIC WRITTEN PERMISSION OF BL COMPANIES.

FOR PERMITTING PURPOSES ONLY NOT RELEASED FOR CONSTRUCTION

Architecture
Engineering
Environmental
Land Surveying
BL Companies
2601 Market Place
Suite 350
Harrisburg, PA 17110
(717) 943-1665

GENIUS KIDS
CHILD DEVELOPMENT CENTER
PLAY. LEARN. GROW

PRELIMINARY/FINAL LAND DEVELOPMENT PLAN

PROPOSED K CARE - UA (GENIUS KIDS)

OLD SCHOOLHOUSE LANE
UPPER ALLEN TOWNSHIP, CUMBERLAND COUNTY, PA

REVISIONS

No.	Date	Desc.
1	09/29/2023	PER TOWNSHIP SKETCH PLAN COMMENTS
2	01/04/2024	PER TOWNSHIP PLAN REVIEW COMMENTS
3	01/24/2024	PER TOWNSHIP PLAN REVIEW COMMENTS
4	02/12/2024	PER TOWNSHIP PLAN REVIEW COMMENTS

Designed	C.L.H.
Drawn	N.M.
Reviewed	A.J.B.
Scale	1" = 20'
Project No.	2202027
Date	07/31/23
CAD File: PR2202027O1	

Title
PROFILES

Sheet No.
PR-1
No.07of 19

2/12/2024, CHESNEY, G:\CIVIL\2022\2202027\DWG\PR2202027O1.DWG, PR-1

LEGEND

- PROPERTY LINE
- 50 — EXISTING GRADES
- 444 — PROPOSED 1' GRADES
- STORM LINE
- "w" TYPE CATCH BASIN
- STORM MANHOLE
- PROPOSED LIGHT POLES

Note

1. Readings shown are based on a total LLF of as shown at grade. Data references the extrapolated performance projections in a 25c ambient based on 10,000 hrs of LED testing (per IESNA LM-80-08 and projected per IESNA TM-21-11).
2. Please refer to the "luminaire locations" table for mounting heights.
3. Product information can be obtained at www.Acuity Brands.com

Note

Please note this analysis does comply with IESNA RP-8-20 levels for parking and pedestrian safety.

Note

Acuity Brands Lighting Inc. This document contains confidential and proprietary information of Acuity Brands Lighting. This document may only be used by or for the benifit of Acuity Brands Lighting's representitives and Customers.
This application design is not a professional engineering drawing and the design, including reported data and calulated results, is provided for informational purposes only,without any warrenty as to accuracy, completeness, safety or otherwise. The design is the result of calculations made using Visual lighting application software, photometric/radiometric data measured in a labrarory, and certian computational and modeling assumptions.
Far-field photometric/radiometric data may have been used to perform one or more calculations. Photometric/radiometric data is typically collected under far-field measurement conditions;far-field data is generally not representitive of near-field geometric conditions. When using the far-field photometric/rodiometric data, the Visual software applies certian generallizing assuptions to approximate near-field performance.. These assumptions may result in significant inaccuracies in individual calculated luminous and/or radiant power quantities in areas where a source is in close proximity to a particular surface or pont.
The modeling of radiant flux exchange used in the Visual software requires a uniform exitance accross each reflecting surface. The Visual software approximates the uniform surface exitance condition by adaptively subdividing surfaces with non-uniform exitance into subsurfaces with sufficently uniform exitance gradiant. Practical restrictions, due to computer hardware limitations, may prevent the subdivision procedure from subdividing surfaces with high exitance gradients into subsurfaces with sufficiently uniform exitance gradients, introducing potential discretization error into the calculated values.
Calulations performed by Visual softwarw assume that all reflected flux is reflected in a perfectly diffuse(Lambertian) and spectrally uniform manner accross the spectral range being analyzed. If actual reflectance characteristics differ from these assumptions, observed luminous and/or radiant power quantities may differ from the predicted quantities.
As a result of the computional limitations and simplifying modeling assumptions described above,and/or variations in actual product performance from tested product samples, the accuracy of calculated outut values identifying expected radiometric quantities and any resulting derived radiation dose calculation may be adversely affected.
In addition, the accuracy of the application design may be adversely affected if information about the physical space provided to Acuity Brands Lighting is incomplete, inaccurate, outdated or not in the required format (includiing but not limited to floor plans, space layout, reflected ceiling plans, physical structures, electrical design or specifications) if incorrect assumptions are made because of because such are not appropriate for the space. Furthermore, actual actual field performance may differ from performance calculated using laboratory measurement as a result of miscalculations related to deficiencies in the information provided about the physical space, degregation factors in the end-user enviroment(including, but not limited to, voltage variation and dirt accumulation), or other possible variations in field conditions. Finially, lamp lumen depriciation and/or depriciation in lamp radiant intensity may result in performance over time that differs performance calculated using a new lamp. Light loss factors may have been used in the application design to estimate such depreciation, but flaws in these estimates may also result in performance over time that differ from the calculated performance.
It is the obligation of the end-user to consult with appropriately qualified Proffessional Engineer (s) to determine whether this application design meets the applicable requirements for performance,code compliance, safety,suitablity and effectiveness for use in a particular application. In no event will Acuity Brands Lighting be responsible for any loss resulting from any use of this design.



D-Series Size 1
LED Wall Luminaire

d-series

Catalog Number
Notes
Type

Specifications

Luminaire
Width: 13-3/4" (34.9 cm)
Depth: 10" (25.4 cm)
Height: 6-3/8" (16.2 cm)
Weight: 12 lbs (5.4 kg)

Back Box (BBW, ELCW)
Width: 13-3/4" (34.9 cm)
Depth: 4" (10.2 cm)
Height: 6-3/8" (16.2 cm)
BBW Weight: 5 lbs (2.1 kg)
ELCW Weight: 10 lbs (4.5 kg)

For 3/4" NPT side-entry conduit (BBW only)

Introduction

The D-Series Wall luminaire is a stylish, fully integrated LED solution for building-mount applications. It features a sleek, modern design and is carefully engineered to provide long-lasting, energy-efficient lighting with a variety of optical and control options for customized performance.

With an expected service life of over 20 years of nighttime use and up to 74% in energy savings over comparable 250W metal halide luminaires, the D-Series Wall is a reliable, low-maintenance lighting solution that produces sites that are exceptionally illuminated.

Ordering Information

EXAMPLE: DSXW1 LED 20C 1000 40K T3M MVOLT DDBTXD

DSXW1 LED

Series	LEDs	Drive Current	Color temperature	Distribution	Voltage	Mounting	Control Options
DSXW1 LED	10C 10 LEDs (one engine)	350 350 mA	30K 3000K	T2S Type II Short	MVOLT[1]	Shipped included (blank) Surface mounting bracket.	Shipped included
	20C 20 LEDs (two engines)	530 530 mA	40K 4000K	T2M Type II Medium	120[1]		PE Photoelectric cell, button type[2]
		700 700 mA	50K 5000K	T3S Type III Short	208[1]		DMG 0-10V dimming driver (no controls)
		1000 1000 mA	AMBPC Amber phosphor converted	T3M Type III Medium	240[1]		PIR 180° motion/ambient light sensor, 15' mtg ht[3]
				T4W Type IV Medium	277[1]	BBW Surface mounting back box (for conduit entry)	PIRH 180° motion/ambient light sensor, 30' mtg ht[3]
				T4FT Forward Throw Medium	347[1]		PIRHTCW Motion/ambient sensor, 8'-15' mounting height, ambient sensor enabled at 30 fc[3,4]
				ASYM Asymmetric Medium	480[1]		PIRHTCWEM Motion/ambient sensor, 8'-15' mounting height, ambient sensor enabled at 30 fc, emergency battery backup (includes external sonopanel enclosure)[3,4,5]
							ELCW Emergency battery backup (includes internal sonopanel enclosure)[5]

Other Options	Finish (required)
Shipped installed: SF Single fuse (120, 277 or 347V)[1] · DF Double fuse (208, 240 or 480V)[1] · HS House-side shield[6] · SPD Separate surge protector[7]	DDBXD Dark bronze · DBLXD Black · DNAXD Natural aluminum · DWHXD White · DSSXD Sandstone · DDBTXD Textured dark bronze · DBLBXD Textured black · DNATXD Textured natural aluminum · DWHGXD Textured white · DSSTXD Textured sandstone
Shipped separately: BSW Back-dimension spikes · WG Wire guard · VG Vandal guard · DDL Diffused drop lens	

Accessories

Ordered and shipped separately.
DSXW1EGS House-side shield (one per light engine)
DSXW1BSW Back-dimension spikes
DSXW1WGU Wire guard accessory
DSXW1VGU Vandal guard accessory

NOTES
1. MVOLT driver operates on any line voltage from 120-277V (50/60 Hz). Specify 120, 208, 240 or 277 options only when ordering with fusing (SF, DF options), or photocontrol (PE option).
2. Only available with 20C, 700mA or 1000mA. Not available with PIR or PIRH.
3. Reference Motion Sensor table on page 3 to pair sensor with the luminaire ordered in an accessory.
4. Photocontrol (PE) requires 120, 208, 240, 277 or 347 voltage option. Not available with motion/ambient light sensors (PIR or PIRH).
5. PIR and PIRHTCW specifies the Dimming Wireless Sensor. PIRH specifies the Dimming Wired Sensor. PIR, PIRHTCW and PIRHTCWEM sensors default to 50% power when "PE" option (bottom layer photocell). Dimming driver standard. Not available with 20 LED (700mA) configuration.
6. Cold weather (-20C) rated. Not compatible with conduit entry applications. Not available with BBW mounting option. Not available with fusing. Not available with 347 or 480 voltage options. Emergency components located in back box housing. Emergency models ELCW, ELCWEM, ELCWTP, ELCWEMTP, ELCWTPEM, ELCWEMTPEM and PIRHTCWEM require 10" (25.4 cm) back box.
7. Single fuse (SF) requires 120, 277 or 347 voltage option. Double fuse (DF) requires 208, 240 or 480 voltage option. Not available with ELCW, PIRHTCW, ELCWEM, ELCWTP, ELCWEMTP, ELCWTPEM or PIRHTCWEM.
8. Also available as a separate accessory; see Accessories information.
9. See the electrical section on page 3 for more details.

LITHONIA LIGHTING
One Lithonia Way • Conyers, Georgia 30012 • Phone: 800.279.8041 • www.lithonia.com
© 2013-2016 Acuity Brands Lighting, Inc. All rights reserved.

DLC Premium · Designed with LEED® goals in mind · Meets Buy American requirements

Autobahn Series ATB0
Roadway Lighting

PRODUCT OVERVIEW



Applications:
Roadways
Off ramps
Residential streets
Parking lots

DIMENSIONS

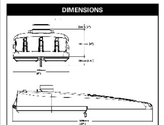

Effective Projected Area (EPA): The EPA for the ATB0 is 0.78 sq. ft. Approx. Wt. = 14 lbs.

Features:

OPTICAL
The Autobahn's new molded silicone optics provide exceptional performance. Silicone optics are superior to other polymeric materials in the areas of: optical efficiency, thermal performance, and reduction in dirt accumulation, all of which can lead to long term lumen degradation and a shift in optical distribution. Also, because silicone allows for the modeling of fine details as well as thick sections, it produces the most crisp, clean and well-defined lighting distributions available. Silicone optics paired with modern LED's allow the Autobahn to take full advantage of both technologies.

Same Light: Performance is comparable to 100 - 400W HPS roadway luminaires.

White Light: Correlated color temperature - 4000K, or optional 2700K, 3000K or 5000K, all 70CRI minimum.

Unique IP66 rated LED light engines provided 0% uplight and restrict backlight to within sidewalk depth, providing optimal application coverage and optimal pole spacing. Available in Type II, III, IV, and V roadway distributions.

ELECTRICAL
Expected Life: LED light engines are rated >100,000 hours at 25°C, L70. Electronic driver has an expected life of 100,000 hours at a 25°C ambient.

Lower Energy: Saves an expected of 40-60% more comparable MH luminaires.

Robust Surge Protection: Two different surge protection options provide a min imum of ANSI C136.2 10kV/5kA protection. 20kV/10kA protection is also available.

Luminaire is continuous and step dimming capable via AO option or controls installed on P7 photocontrol receptacle option.

MECHANICAL
Includes standard ALE lineman-friendly features such as tool-less entry, 3 station terminal block and quick disconnects. Bubble level located inside the electrical compartment for easily leveling at installation.

Rugged die-cast aluminum housing and door are polyester powder-coated for durability and corrosion resistance. Rigorous five-stage pre-treating and painting process yields a finish that achieves a scribe creepage rating of 7 (per ASTM D1654) after over 3000 hours exposure to salt fog chamber (operated per ASTM B117).

Mast arm mount is adjustable for arms from 1-1/4" to 2" (1-5/8" to 2-3/8" O.D.) diameter. Provides a 5x vibration rating per ANSI C136.31

Wildlife shield is cast into the housing (is not a separate piece).

CONTROLS
NEMA 3 pin photocontrol receptacle is standard, with the Acuity-designed ANSI standard 7 pin receptacle optionally available.

Premium solid state locking style photocontrol - PCSL (10 year rated life) Extreme long life solid state locking style photocontrol - PCLL (20 year rated life).

Optional onboard Adjustable Output module allows the light output and input wattage to be modified to meet site specific requirements, and also can allow a single fixture to be flexibly applied in many different applications.

STANDARDS
Designlights Consortium® (DLC) qualified product. Not all versions of this product may be DLC qualified. Please check the DLC Qualified Products List at www.designlights.org/QPL to confirm which versions are qualified.

Color temperatures of ≥ 3000K must be specified for International Dark-Sky Association certification.

Rated for -40°C to 40°C Ambient
CSA Certified to U.S. and Canadian standards
Complies with ANSI: C136.2, C136.10, C136.14, C136.31, C136.15, C136.37

Note: Specifications subject to change without notice. Actual performance may differ as a result of end-use environment and application.

©2014-2021 Acuity Brands Lighting, Inc. ATB0 04/20/21

AEL American Electric Lighting

Statistics

Description	Symbol	Avg	Max	Min	Max/Min	Avg/Min	Min/Avg	Max/Avg
PARKING LOT	+	1.7 fc	4.3 fc	0.5 fc	8.6:1	3.4:1	0.29	2.53
PROPERTY LINE	+	0.3 fc	0.8 fc	0.0 fc	N/A	N/A	0.00	2.67
SITE CALCULATIONS	+	0.5 fc	4.3 fc	0.0 fc	N/A	N/A	0.00	8.60

Schedule

Symbol	Label	Quantity	Manufacturer	Catalog Number	Description	Number Lamps	Filename	Lumens Per Lamp	Light Loss Factor	Wattage
	A	1	American Electric Lighting	ATB0 P205 R4 4K/5K HSS	Autobahn Small P205 Package Roadway Type IV 4000K/5000K House side shield	1	ATB0_P205_R4_4K_5K_HSS.ies	11421	0.9	102
	B	3	Lithonia Lighting	DSXW1 LED 10C 350 40K T2M MVOLT	DSXW1 LED WITH (1) 10 LED LIGHT ENGINES, TYPE T2M OPTIC, 4000K, @ 350mA.	1	DSXW1_LED_10C_350_40K_T2M_MVOLT.ies	1448	0.9	13.3
	C	2	American Electric Lighting	ATB0 P205 R4 4K	Autobahn Small P205 Package Roadway Type IV 4000K/5000K	1	ATB0_P205_R4_4K.ies	13829	0.9	102



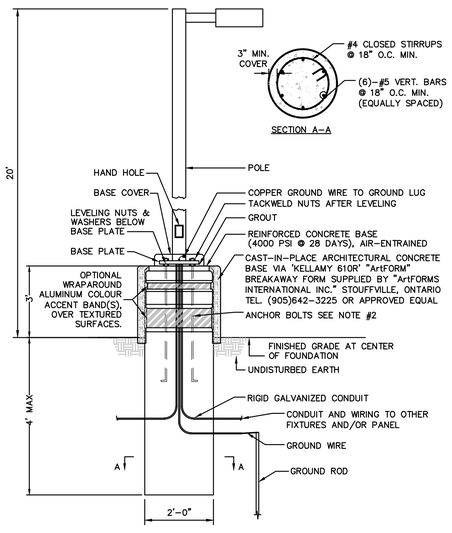

811 Know what's below. Call before you dig.

PENNSYLVANIA ACT 287 (1974) AS AMENDED BY PENNSYLVANIA ACT 199 (2004) REQUIRES NO LESS THAN THREE (3) WORKING DAYS AND NO MORE THAN (10) WORKING DAYS NOTICE TO UTILITIES BEFORE YOU EXCAVATE, DRILL, BLAST OR DEMOLISH. PA ONE-CALL SERIAL NO. 20231515029

NOTES:
1. CONTRACTOR SHALL FURNISH DETAILED DRAWINGS WITH DESIGN CALCULATIONS FOR THE PROPOSED FOUNDATION PRIOR TO CONSTRUCTION AND ORDERING FOUNDATION MATERIALS. DRAWINGS AND CALCULATIONS MUST BE SIGNED AND SEALED BY A PENNSYLVANIA REGISTERED ENGINEER.
2. ANCHOR BOLTS FURNISHED WITH POLE. BOLT PATTERN, SIZE AND LENGTH AS SPECIFIED BY MANUFACTURER.
3. CONTRACTOR SHALL FURNISH AND INSTALL CONDUIT AND WIRING PER NEC REQUIREMENTS
4. FORM RELEASE AGENT HAS BEEN FACTORY-APPLIED TO INSIDE SURFACE OF "ArtFORM".

TYPICAL LIGHT POLE AND BASE DETAIL

N.T.S

Architecture
Engineering
Environmental
Land Surveying
BL Companies
2601 Market Place
Suite 350
Harrisburg, PA 17110
(717) 943-1665

GENIUS KIDS CHILD DEVELOPMENT CENTER PLAY LEARN GROW

PRELIMINARY/FINAL LAND DEVELOPMENT PLAN
PROPOSED K CARE - UA (GENIUS KIDS)
OLD SCHOOLHOUSE LANE
UPPER ALLEN TOWNSHIP, CUMBERLAND COUNTY, PA

REVISIONS

No.	Date	Desc.
1	09/29/2023	PER TOWNSHIP SKETCH PLAN COMMENTS
2	01/04/2024	PER TOWNSHIP PLAN REVIEW COMMENTS
3	01/24/2024	PER TOWNSHIP PLAN REVIEW COMMENTS
4	02/12/2024	PER TOWNSHIP PLAN REVIEW COMMENTS

Designed	C.L.H.
Drawn	N.M.
Reviewed	A.J.B.
Scale	1" = 20'
Project No.	2202027
Date	07/31/23
CAD File:	LP2202027O1

Title
LIGHTING PLAN

Sheet No.
LP-1
No.08of 19

© 2024 BL COMPANIES, INC. THESE DRAWINGS SHALL NOT BE UTILIZED BY ANY PERSON, FIRM OR CORPORATION WITHOUT THE SPECIFIC WRITTEN PERMISSION OF BL COMPANIES.

FOR PERMITTING PURPOSES ONLY NOT RELEASED FOR CONSTRUCTION

2/12/2024, CHERIEBY, G:\CIVIL\2022\2202027\DWG\LP2202027O1.DWG, LP

PLANT SCHEDULE SITE

SYMBOL	CODE	QTY	BOTANICAL NAME	COMMON NAME	SIZE	CONTAINER	
CANOPY TREES							
	AG	4	ACER GINNALA	AMUR MAPLE	2–2.5" CAL.	B&B	
	AR	2	ACER RUBRUM 'ARMSTRONG'	ARMSTRONG RED MAPLE	2–2.5" CAL.	B&B	
	BN	2	BETULA NIGRA	RIVER BIRCH MULTI–TRUNK	2"–2.5" CAL.	B&B	
	CB	2	CARPINUS BETULUS 'FASTIGIATA'	UPRIGHT EUROPEAN HORNBEAM	2.5" CAL. 6' HT.	B&B	
	CA	1	CARPINUS CAROLINIANA	AMERICAN HORNBEAM	2–2.5" CAL.	B&B	
	QR	3	QUERCUS ROBUR X BICOLOR 'CHIMNEY FIRE'	CHIMNEY FIRE RED OAK	2"–2.5" CAL.	B&B	
EVERGREEN TREES							
	PG	6	PICEA PUNGENS 'GLAUCA'	BLUE COLORADO SPRUCE	6–7' HT.	B&B	
	PS	4	PINUS STROBUS	EASTERN WHITE PINE	6'–7' HT.	B&B	
	TO	25	THUJA OCCIDENTALIS 'SMARAGD'	EMERALD GREEN ARBORVITAE	6'–7' HT.	B&B	
ORNAMENTAL TREES							
	AGA	2	AMELANCHIER X GRANDIFLORA 'AUTUMN BRILLIANCE'	AUTUMN BRILLIANCE APPLE SERVICEBERRY	2" CAL. 6' HT MIN	B&B	
SYMBOL	CODE	QTY	BOTANICAL NAME	COMMON NAME	SIZE	CONTAINER	SPACING
SHRUBS AND GRASSES							
	AGL	13	ABELIA X GRANDIFLORA 'LITTLE RICHARD'	LITTLE RICHARD GLOSSY ABELIA	18"–24" HT.	CONT.	48" o.c.
	AM	6	ARONIA MELANOCARPA 'LOWSCAPE MOUND'	LOWSCAPE MOUND ARONIA	12"–24" HT.	CONT.	24" o.c.
	CS	15	CORNUS STOLONIFERA 'FARROW'	ARCTIC FIRE®RED TWIG DOGWOOD	18"–24" HT.	CONT.	48" o.c.
	HV	3	HAMAMELIS VERNALIS	OZARK WITCHHAZEL	18"–24" HT.	CONT.	72" o.c.
	IGS	19	ILEX GLABRA 'SHAMROCK'	SHAMROCK INKBERRY HOLLY	18"–24" HT.	CONT.	48" o.c.
	IV	32	ILEX VERTICILLATA	WINTERBERRY	18"–24" HT.	CONT.	48" o.c.
	IVH	12	ITEA VIRGINICA 'HENRY'S GARNET'	HENRY'S GARNET SWEETSPIRE	18"–24" HT.	CONT.	48" o.c.
	MP	8	MYRICA PENSYLVANICA	NORTHERN BAYBERRY	18"–24" HT.	CONT.	72" o.c.
	PA	14	PENNISETUM ALOPECUROIDES 'LITTLE BUNNY'	LITTLE BUNNY FOUNTAIN GRASS	2 GAL.	CONT.	24" o.c.
	RM	5	RHODODENDRON MAXIMUM	ROSEBAY RHODODENDRON	18"–24" HT. AND SPREAD		48" o.c.
GROUNDCOVER							
	AI	18	ASCLEPIAS INCARNATA	SWAMP MILKWEED	1 GAL.	CONT.	36" o.c.
	LM	41	LIRIOPE MUSCARI 'BIG BLUE'	BIG BLUE LILYTURF	1 GAL.	CONT.	24" o.c.
	MD	45	MONARDA DIDYMA	BEE BALM	1 GAL.	CONT.	24" o.c.
	RH	54	RUDBECKIA HIRTA	BLACK–EYED SUSAN	1 GAL.	CONT.	18" o.c.

NOTES:
1) ALL SUBSTITUTIONS MUST RECEIVE APPROVAL FROM THE LANDSCAPE ARCHITECT PRIOR TO DELIVERY TO SITE.

2) PROVIDE AND INSTALL ALL PLANTS SHOWN ON THE PLANTING PLAN DRAWINGS; THE QUANTITIES IN THE PLANT LIST ARE PROVIDED FOR THE CONTRACTOR'S CONVENIENCE ONLY. IF DISCREPANCIES OCCUR, THE LARGER QUANTITY SHALL APPLY.

3) IF THERE IS A DISCREPANCY BETWEEN BOTANICAL AND COMMON NAME, BOTANICAL NAME PREVAILS.

ORDINANCE REQUIREMENTS - SALDO

SECTION: S220-5.13		REQUIRED	PROPOSED	WAIVER
220-5.13	In residential subdivisions of 10 or more units, all commercial and industrial subdivisions and land developments with greater than 10 parking spaces, the developer shall provide buffer yards and landscaping in accordance with this section. For commercial and industrial subdivisions and land developments, a minimum of 10% of the developed area shall be landscaped or in buffer yards.	10% of developed area should be landscaped 1.06 Acres x 10% = 4,627.3 S.F.	>10%	No
B(1)	Buffer Yard Type 2: One shade tree per 40 linear feet and one evergreen tree per 30 linear feet of buffer yard screen and one deciduous or evergreen shrub per 20 linear feet of buffer yard screen At least 60% of shrub plantings shall be of the evergreen type.	305' buffer long Old Schoolhouse Lane One shade tree per 40 linear feet = 8 One evergreen tree per 30 linear feet = 11 One deciduous or evergreen shrub per 20 linear feet = 16 (10+ evergreen)	8 shade trees, 12 evergreen trees, 18 shurbs proposed for bufferyard	No
B(1)e	All dumpsters, transformers, fuel storage tanks and unsightly utilities shall meet the following screening requirements regardless of location or district: one shade tree per 40 linear feet and one evergreen tree per five linear feet of visibility. In addition, all trash disposal areas shall be effectively screened with no less than a six-foot solid fence so as not to be visible from parking areas, roadways or adjacent properties. Refuse collection systems shall also be in accordance with § 220-5.17 of this chapter.	48 L.F. of fence around dumpster One shade tree per 40 linear feet = 2 One evergreen tree per 5 linear feet = 10	6' solid fence and 2 shade tree and 10 evergreen tree around dumpseter	No
B(1)g.[5]	Landscape buffering and screening techniques shall be required for stormwater management facilities that are adjacent to dissimilar adjoining properties and public and private roads. Buffer Yard Type 3: One shade tree per 30 linear feet and one evergreen tree per 10 linear feet and one deciduous or evergreen shrub per 10 linear feet of buffer yard screen. At least 70% of shrub plantings shall be of the evergreen type	78' Along Old Schoolhouse Lane One shade tree per 30 linear feet = 3 one evergreen tree per 10 linear feet = 8 one shrub per 10 linear feet = 8(5+ evergreen)	3 shade tree and 8 evergreen tree, 18 shrubs proposed for stormwater management facility buffer (in addition to Buffer Yard Type 2 requirement)	No
B(2)b	Landscaping Islands: Each required planting island shall contain at least one shade or canopy tree, chosen from the list of approved plantings in Subsection D(7)(a)[1] herein.	1 landscaping island = 1 shade or canopy tree	1 canopy tree in landscape island	No
D(7)	A minimum of two canopy trees shall be provided for every 100 feet of public right-of-way. Street trees shall be placed a minimum of 40 feet apart along the right-of-way and shall be located so as to maximize the growth potential of the plant material, minimize the potential for root interference with public infrastructure, and enhance the quality of the development.	Old Schoolhouse Lane = 305 feet 6 canopy trees along public right-of-way	6 canopy trees within bufferyard area along public right-of-way	No

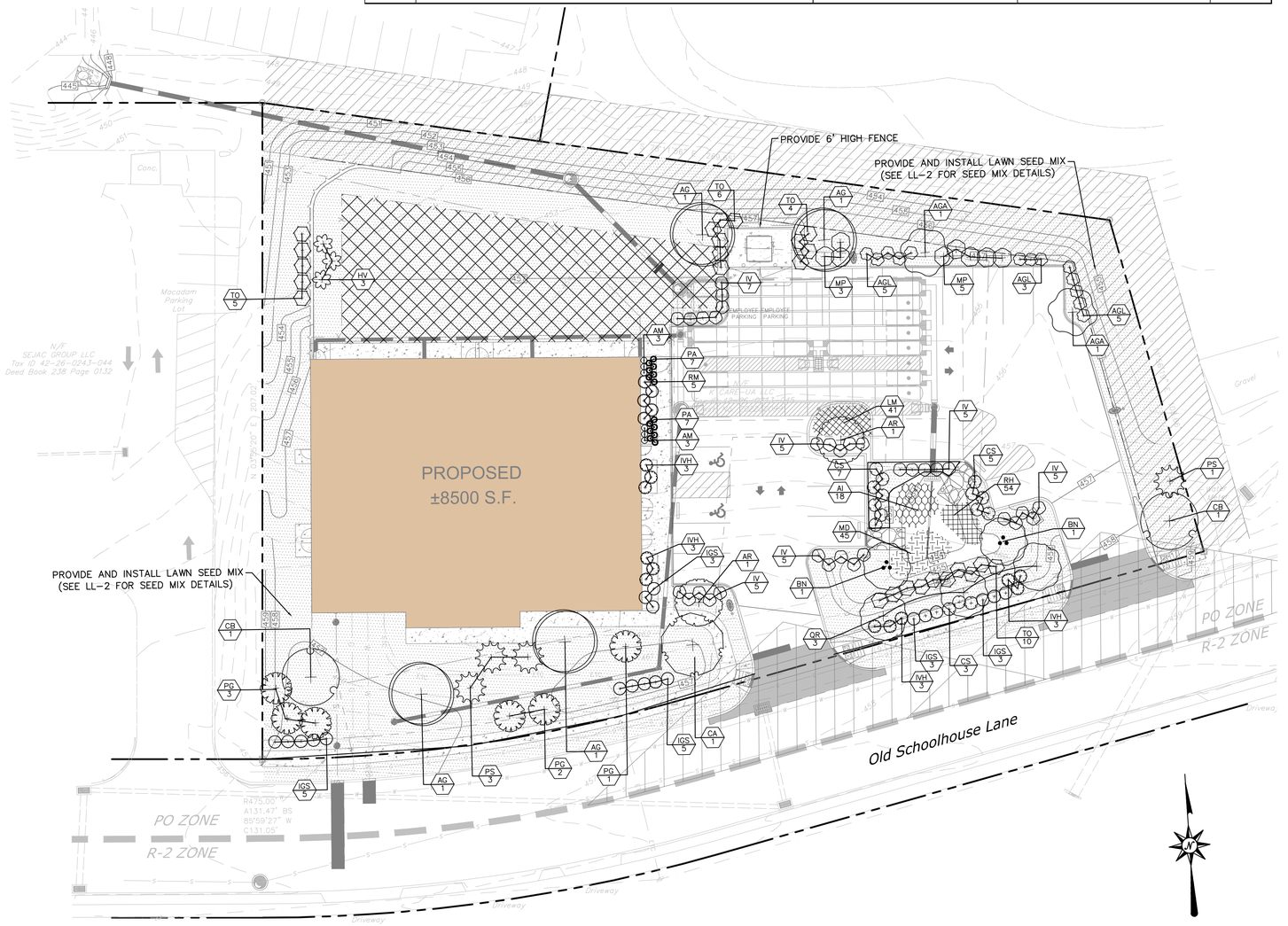

811 Know what's **below.** **Call** before you dig.

PENNSYLVANIA ACT 287 (1974) AS AMENDED BY PENNSYLVANIA ACT 199 (2004) REQUIRES NO LESS THAN THREE (3) WORKING DAYS AND NO MORE THAN (10) WORKING DAYS NOTICE TO UTILITIES BEFORE YOU EXCAVATE, DRILL, BLAST OR DEMOLISH.
PA ONE–CALL SERIAL NO. 20231515029

LANDSCAPE PLAN LEGEND

PROPERTY LINE

LOD — LIMITS OF DISTURBANCE LINE

PROVIDE AND INSTALL LAWN SEED MIX (SEE LL–2 FOR SEED MIX DETAILS)

© 2024 BL COMPANIES, INC. THESE DRAWINGS SHALL NOT BE UTILIZED BY ANY PERSON, FIRM OR CORPORATION WITHOUT THE SPECIFIC WRITTEN PERMISSION OF BL COMPANIES.

FOR PERMITTING PURPOSES ONLY NOT RELEASED FOR CONSTRUCTION

Architecture
Engineering
Environmental
Land Surveying
BL Companies
2601 Market Place
Suite 350
Harrisburg, PA 17110
(717) 943-1665

GENIUS KIDS CHILD DEVELOPMENT CENTER PLAY. LEARN. GROW

PRELIMINARY/FINAL LAND DEVELOPMENT PLAN

PROPOSED K CARE - UA (GENIUS KIDS)

OLD SCHOOLHOUSE LANE
UPPER ALLEN TOWNSHIP, CUMBERLAND COUNTY, PA

REVISIONS		
No.	Date	Desc.
1	09/29/2023	PER TOWNSHIP SKETCH PLAN COMMENTS
2	01/04/2024	PER TOWNSHIP PLAN REVIEW COMMENTS
3	01/24/2024	PER TOWNSHIP PLAN REVIEW COMMENTS
4	02/12/2024	PER TOWNSHIP PLAN REVIEW COMMENTS

Designed	C.L.H.
Drawn	N.M.
Reviewed	A.J.B.
Scale	1" = 20'
Project No.	2202027
Date	07/31/23
CAD File: LL220202701	

Title
LANDSCAPING PLAN

Sheet No.
LL-1
No.09of 19

2/13/2024, CHERSHEY, G:\2022\22-0\220202701\DWG\LL220202701.DWG, LL-1

LANDSCAPE NOTES

1. THE LANDSCAPE PLAN AND DETAIL SHEET ARE FOR LANDSCAPING INFORMATION ONLY. REFER TO THE SITE PLAN, GRADING AND DRAINAGE PLAN, SITE UTILITIES PLAN, LIGHTING PLAN AND DEMOLITION PLAN FOR ALL OTHER INFORMATION.

2. COORDINATE PLANT MATERIAL LOCATIONS WITH SITE UTILITIES. UTILITY LOCATIONS SHOWN ON THE DRAWINGS ARE APPROXIMATE. EXERCISE CARE WHEN DIGGING IN AREAS OF POTENTIAL CONFLICT WITH UNDERGROUND OR OVERHEAD UTILITIES. THE CONTRACTOR IS RESPONSIBLE FOR ANY DAMAGE DUE TO CONTRACTOR'S NEGLIGENCE AND SHALL REPLACE OR REPAIR ANY DAMAGE AT CONTRACTOR'S EXPENSE.

3. THE LOCATIONS FOR PLANT MATERIAL ARE APPROXIMATE AND ARE SUBJECT TO FIELD ADJUSTMENT DUE TO UTILITY LOCATIONS AND SITE CONDITIONS. THE CONTRACTOR SHALL ACCURATELY STAKE OUT THE LOCATIONS FOR ALL PLANTS FOR THE REVIEW, ADJUSTMENT, AND APPROVAL BY OWNER OR LANDSCAPE ARCHITECT PRIOR TO PLANTING.

4. THE CONTRACTOR SHALL GUARANTEE THAT ALL PLANTS SHALL BE HEALTHY AND FREE OF DISEASE FOR A PERIOD OF ONE YEAR OR JUNE 1ST OF THE YEAR FOLLOWING INSTALLATION, WHICHEVER IS LONGER. AFTER SUBSTANTIAL COMPLETION AND ACCEPTANCE BY OWNER OR LANDSCAPE ARCHITECT. CONTRACTOR SHALL REPLACE ANY DEAD OR UNHEALTHY PLANTS AT CONTRACTOR'S EXPENSE. PLANT MATERIAL REPLACEMENTS SHALL BE GUARANTEED FOR ONE FULL YEAR FROM DATE OF REPLACEMENT. REPLACEMENT PLANTS SHALL BE THE SAME AS SPECIFIED FOR THE ORIGINAL PLANTING. REPLACEMENTS SHALL BE MADE AS MANY TIMES AS NECESSARY TO ENSURE HEALTHY PLANTS. FINAL ACCEPTANCE SHALL BE MADE IF ALL PLANTS MEET THE GUARANTEE REQUIREMENTS INCLUDING MAINTENANCE. MAINTENANCE RESPONSIBILITIES INCLUDE CULTIVATING, SPRAYING, WEEDING, WATERING, TIGHTENING GUYS, PRUNING, FERTILIZING, MULCHING, AND ANY OTHER OPERATIONS NECESSARY TO MAINTAIN PLANT VIABILITY. MAINTENANCE SHALL BEGIN IMMEDIATELY AFTER PLANTING AND CONTINUE UNTIL THE END OF THE GUARANTEE PERIOD. DURING THE LANDSCAPE MAINTENANCE PERIOD (GUARANTEE) THE LANDSCAPE CONTRACTOR SHALL NOTIFY THE OWNER IN WRITING OF ANY SITE CONSTRAINTS (PHYSICAL, ENVIRONMENT, ETC.) OR MAINTENANCE DEFICIENCIES THAT MAY AFFECT LANDSCAPE VEGETATION ESTABLISHMENT.

5. THE CONTRACTOR SHALL SUPPLY ALL LABOR, PLANTS, AND MATERIALS IN QUANTITIES SUFFICIENT TO COMPLETE THE WORK SHOWN ON THE DRAWINGS AND LISTED IN THE PLANT SCHEDULE. IN THE EVENT OF A DISCREPANCY BETWEEN QUANTITIES SHOWN IN THE PLANT SCHEDULE AND THOSE REQUIRED BY THE DRAWINGS, THE LARGER SHALL APPLY. ALL PLANTS SHALL BE ACCLIMATED BY THE SUPPLY NURSERY TO THE LOCAL HARDINESS ZONE AND BE CERTIFIED THAT THE PLANTING MATERIAL HAS BEEN GROWN FOR A MINIMUM OF TWO YEARS AT THE SOURCE AND OBTAINED WITHIN 200 MILES OF PROJECT SITE UNLESS OTHERWISE APPROVED BY OWNER OR LANDSCAPE ARCHITECT.

6. PLANTS SHALL HAVE TAGS THAT IDENTIFY PLANT GENUS, SPECIES, CULTIVAR (IF APPLICABLE), PLANT COMMON NAME, NAME OF SOURCE NURSERY, AND SIZE OF PLANT FOR REVIEW OF OWNER OR LANDSCAPE ARCHITECT.

7. NO PLANT SHALL BE PLACED IN THE GROUND BEFORE ROUGH GRADING HAS BEEN COMPLETED AND APPROVED BY THE OWNER OR LANDSCAPE ARCHITECT. STAKING THE LOCATION OF ALL TREES AND SHRUBS SHALL BE COMPLETED PRIOR TO PLANTING FOR APPROVAL BY THE OWNER OR LANDSCAPE ARCHITECT.

8. FINAL GRADES SHALL BLEND SMOOTHLY WITH EXISTING GRADES, AND TOP AND BOTTOM OF SLOPES SHALL BE ROUNDED.

9. ALL TREE AND SHRUB MASSINGS SHALL BE MULCHED TO A DEPTH OF 3". ANNUAL AND PERENNIAL BEDS SHALL BE MULCHED TO A DEPTH OF 2". MULCH SHALL BE UNCOLORED TRIPLE-SHREDDED HARDWOOD BARK MULCH, AGED AT LEAST 6 MONTHS.

10. IF TREE STAKING IS PROPOSED, TREE STAKING MUST BE COMPLETED THE SAME DAY AS THE TREE IS INSTALLED. ALL TREES SHALL BE STAKED OR GUYED PER DETAIL.

11. LANDSCAPE PLANTING AREAS MUST BE FREE DRAINING. PAVEMENT, COMPACTED SUBGRADE, DEAD OR DYING PLANT MATERIAL, BLASTED ROCK, STONES GREATER THAN 1" IN DIAMETER, AND ANY OTHER MATERIAL HARMFUL TO PLANT GROWTH AND DEVELOPMENT SHALL BE REMOVED FROM AREAS TO BE LANDSCAPED AS REQUIRED BY PLANTING DETAILS OR SPECIFICATIONS.

12. PLANTING SOIL:

DEPTH: PLANTING SOIL SHALL BE INSTALLED AT A MINIMUM DEPTH OF 4" OR AS NOTED IN THE LANDSCAPE DETAILS. PLANTING SOIL SHALL BE UTILIZED IN ALL PLANTING AREAS INCLUDING SEEDED AREAS.

TESTING: CONTRACTOR SHALL SUBMIT (2) SOIL SAMPLES PER SOIL STOCKPILE TO A CERTIFIED TESTING LABORATORY TO DETERMINE ACIDITY, ORGANIC CONTENT, MECHANICAL ANALYSIS, AVAILABLE NUTRIENTS (N,P,K,Ca,Mg,S,Fe,Mn,Zn,Cu,B,Al,Pb) AND NECESSARY AMENDMENTS TO SOIL. THE CONTRACTOR SHALL SUBMIT THE TEST RESULTS TO THE OWNER OR LANDSCAPE ARCHITECT FOR REVIEW AND APPROVAL. TEST RESULTS SHALL RECOMMEND AMENDMENTS THAT WILL ALTER THE SOIL CHARACTERISTICS SUCH THAT THE CHARACTERISTICS DESCRIBED BELOW ARE ACHIEVED AND THE SPECIFIED PLANTS (CONTRACTOR TO PROVIDE LIST TO TESTING LABORATORY) WILL ACHIEVE PROPER GROWTH THAT IS NEITHER DEFICIENT NOR EXCESSIVE. THE CONTRACTOR SHALL INCORPORATE THESE AMENDMENTS AT NO INCREASE IN CONTRACT PRICE.

CHARACTERISTICS: PLANTING SOIL MAY CONSIST OF EXISTING ON-SITE SOILS, AMENDED ON-SITE SOILS, OR IMPORTED SOILS MEETING THE FOLLOWING CRITERIA:

A. NOT TO CONTAIN MATERIALS HARMFUL TO PLANT LIFE, TO BE CLEAN, FERTILE, FRIABLE, AND WELL DRAINING. ALL PLANTING SOIL SHALL BE FREE OF ANY SUBSOIL EARTH CLODS, SODS, STONES OVER 1" IN ANY DIMENSION, STICKS, ROOTS, WEEDS, LITTER AND OTHER DELETERIOUS MATERIAL. PLANTING SOIL SHALL BE UNIFORM IN QUALITY AND TEXTURE.
B. PLANTING SOIL SHALL HAVE THE FOLLOWING OPTIMUM RANGES UNLESS OTHERWISE APPROVED BY THE OWNER OR LANDSCAPE ARCHITECT.

ORGANIC CONTENT	3% – 6% FOR LAWN OR GRASS AREAS. 4% – 8% FOR TREE AND SHRUB PLANTERS. 8%–16% FOR RETENTION OR DETENTION BASINS.
(BY LOSS OF IGNITION AT 375 C METHOD OF TESTING)	
PH	6.0 – 7.3

C. NUTRIENT LEVELS SHALL BE ACHIEVED BY THE CONTRACTOR'S ADDITION OF AMENDMENTS TO THE PLANTING SOIL TO MEET THE OPTIMUM NUTRIENT LEVELS SPECIFIED IN THE TESTING LABORATORY REPORT FOR EACH OF PLANTS TO BE INSTALLED.
D. SOIL SHALL BE COMPACTED TO A SURFACE PENETRATION RESISTANCE OF 75-125 LBS/SQ.IN.
E. SOIL MAY BE TREATED FOR WEEDS WITH PRE-EMERGENT OR POST-EMERGENT HERBICIDE, AS NEEDED AND AS APPROPRIATE FOR THE APPLICATION SEASON OR LOCATION, OR ELIMINATE GROWTH OF UNWANTED PLANT MATERIAL. APPLY HERBICIDES IN ACCORDANCE WITH MANUFACTURERS RECOMMENDATIONS. HERBICIDE APPLICATOR MUST BE LICENSED IN THE STATE OF PENNSYLVANIA, AND PERFORM APPLICATIONS IN ACCORDANCE WITH LOCAL REQUIREMENTS, PERMITTING STIPULATIONS, AND ANY OTHER RESTRICTIONS INCLUDING AND IN EXCESS OF STATE AND FEDERAL REGULATIONS.
F. PROPOSED TOPSOIL SHALL MEET THE USDA SOILS TEXTURAL PERCENTAGES OF SAND, SILT, AND CLAY FOR FOLLOWING CLASSIFICATIONS:
   - LOAM
   - SANDY LOAM WHERE SAND DOES NOT EXCEED 70% AND CLAY IS NOT LESS THAN 5%.
   - SANDY CLAY LOAM WHERE SAND DOES NOT EXCEED 70% AND CLAY IS LESS THAN 28%.
G. BIORETENTION SOILS: SOIL TO BE INSTALLED IN RETENTION BASINS, PONDS, OR OTHER STORMWATER MANAGEMENT ENVIRONS SHALL MEET THE ABOVE DESCRIBED CHARACTERISTICS AND AS FOLLOWS:
   - SOIL SHALL NOT CONTAIN MORE THAN 20% CLAY AND LESS THAN 40% SILT.
   - SOIL SHALL HAVE AN INFILTRATION RATE BETWEEN 1/2" AND 3" PER HOUR.
H. MODIFICATION TO THE PLANTING SOIL CHARACTERISTICS DESCRIBED ABOVE MAY BE SUBMITTED FOR APPROVAL BY THE LANDSCAPE ARCHITECT. CONTRACTOR MUST DEMONSTRATE PROPOSED CHARACTERISTICS ARE EQUAL TO OR SUPERIOR TO THE SPECIFIED CHARACTERISTICS WITH RESPECT TO SUPPORTING PLANT GROWTH, AND STORMWATER MANAGEMENT.

12. PLANTING AMENDMENTS:
APPLY FERTILIZER AND OTHER AMENDMENTS AS RECOMMENDED FOR EACH PLANTING AREA BY SOIL ANALYSIS. APPLY AMENDMENTS IN A MANNER CONSISTENT WITH MANUFACTURER'S RECOMMENDATIONS. ANY ORGANIC AMENDMENTS SHALL HAVE A pH BETWEEN 4.5 AND 5.5 UNLESS OTHERWISE RECOMMENDED.

13. PLANT REQUIREMENTS: ALL PLANTS SHALL CONFORM IN SIZE AND GRADE TO THE AMERICAN STANDARD FOR NURSERY STOCK, ANSI Z60.1 (LATEST EDITION). ALL PLANTS SHALL MEET THE ADDITIONAL REQUIREMENTS SET FORTH BELOW AND IN WRITTEN SPECIFICATIONS AS APPLICABLE. ALL TREES AND SHRUBS SHALL HAVE BEEN GROWN AT A COMMERCIAL NURSERY WITHIN 200 MILES OF THE PROJECT SITE UNLESS OTHERWISE APPROVED BY OWNER OR LANDSCAPE ARCHITECT. THEY SHALL BE TYPICAL OF THEIR SPECIES OR VARIETY. THEY SHALL BE HEALTHY, SYMMETRICAL, EVENLY AND DENSELY BRANCHED, AND DENSELY FOLIATED WHEN IN LEAF. THEY SHALL BE FREE OF BARK INJURY, DISEASE, AND INSECT PESTS. ALL TREES SHALL HAVE A STRAIGHT TRUNK WITH A SINGLE MAIN LEADER UNLESS OTHERWISE CHARACTERISTIC OF THE SPECIES OR VARIETY. THE OWNER OR LANDSCAPE ARCHITECT WILL ALLOW SUBSTITUTIONS ONLY UPON WRITTEN APPROVAL. SIZES SHALL CONFORM TO THE MEASUREMENT SPECIFIED ON THE DRAWINGS. PLANTS LARGER THAN SPECIFIED MAY BE USED IF APPROVED, BUT THE USE OF SUCH PLANTS SHALL NOT INCREASE THE CONTRACT PRICE. ALL OVERSTORY TREES PLANTED ALONG PARKING AREAS, SIDEWALKS AND PEDESTRIAN ACCESSES SHALL NOT BRANCH BELOW 7' FEET IF THE TREE CALIPER IS 3" INCHES OR GREATER. ALL PLANT MATERIALS ARE SUBJECT TO INSPECTION AND ACCEPTANCE BY THE OWNER OR LANDSCAPE ARCHITECT AT THE NURSERY SOURCE. THE CONTRACTOR SHALL COORDINATE SOURCE VISITS WITH THE LANDSCAPE ARCHITECT AND SHALL ACCOMPANY THE OWNER AND/OR LANDSCAPE ARCHITECT FOR ALL INSPECTIONS. CERTIFICATES OF COMPLIANCE WITH SPECIFICATIONS ARE REQUIRED FOR ALL PLANTS.

14. INSPECTION AND REVIEW:
ALL PLANT MATERIAL SHALL BE SUBJECT TO INSPECTION AND ACCEPTANCE BY THE OWNER OR LANDSCAPE ARCHITECT AT THE NURSERY SOURCE OR PLACE OF GROWTH. THE CONTRACTOR SHALL COORDINATE WITH THE LANDSCAPE ARCHITECT ON A SCHEDULE FOR SOURCE VISITS AND ACCOMPANY THE OWNER OR LANDSCAPE ARCHITECT FOR ALL SOURCE INSPECTIONS. CERTIFICATES OF COMPLIANCE ARE REQUIRED FOR ALL PLANT MATERIALS. PHOTOGRAPHIC REVIEW OF PLANT MATERIAL IS ACCEPTABLE IF APPROVED BY LANDSCAPE ARCHITECT. PHOTOGRAPHS MUST BE PROVIDED IN QUANTITY AND VARIETY TO ALLOW LANDSCAPE ARCHITECT SUFFICIENT INFORMATION TO MAKE A REASONABLE DETERMINATION AS TO THE PLANTS' QUALITY. OWNER AND LANDSCAPE ARCHITECT RESERVES THE RIGHT TO REJECT PLANT MATERIAL DELIVERED TO THE SITE BUT PREVIOUSLY ACCEPTED IF DAMAGED OR NOT PROPERLY MAINTAINED DURING THE DELIVERY PROCESS.

15. PLANTING SEASONS (UNLESS OTHERWISE APPROVED BY THE OWNER OR LANDSCAPE ARCHITECT)

	SPRING	FALL
PLANTINGS	APRIL 1 TO JUNE 15	SEPTEMBER 1 TO OCTOBER 15

16. SEEDING MIXTURES: REFER TO SEED MIX NOTES.
SEEDED AREA SHALL BE ACCEPTED WHEN SEED AREA ACHIEVES 90% COVERAGE.

17. ALL SLOPES STEEPER THAN 3:1 RECEIVING A SEED MIX SHALL BE COVERED WITH AN EROSION CONTROL BLANKET OF STRAW FIBER AND BIODEGRADABLE OR PHOTODEGRADABLE NETTING.

18. UNLESS OTHERWISE NOTED IN DRAWING SET, NEW TREELINES SHALL EQUAL CLEARING AND GRUBBING LIMIT FOR CONSTRUCTION.

19. ALL DISTURBED AREAS NOT OTHERWISE DEVELOPED SHALL BE SEEDED WITH THE LAWN SEED MIX.

SEED MIX NOTES

A. LAWN SEEDING MIX:
   15 % PERENNIAL RYEGRASS (BLEND OF 3 IMPROVED HYBRIDS)
   25 % FINE LEAF OR CREEPING FESCUE (BLEND OF 3 IMPROVED HYBRIDS)
   60 % KENTUCKY BLUEGRASS (BLEND OF 3 IMPROVED HYBRIDS)
   SEEDING RATE: 5 LBS/1,000 S.F.
   SEEDING DATES: AUGUST 15 – OCTOBER 1 AND APRIL 15 – JUNE 30 UNLESS OTHERWISE APPROVED BY THE OWNER OR LANDSCAPE ARCHITECT.

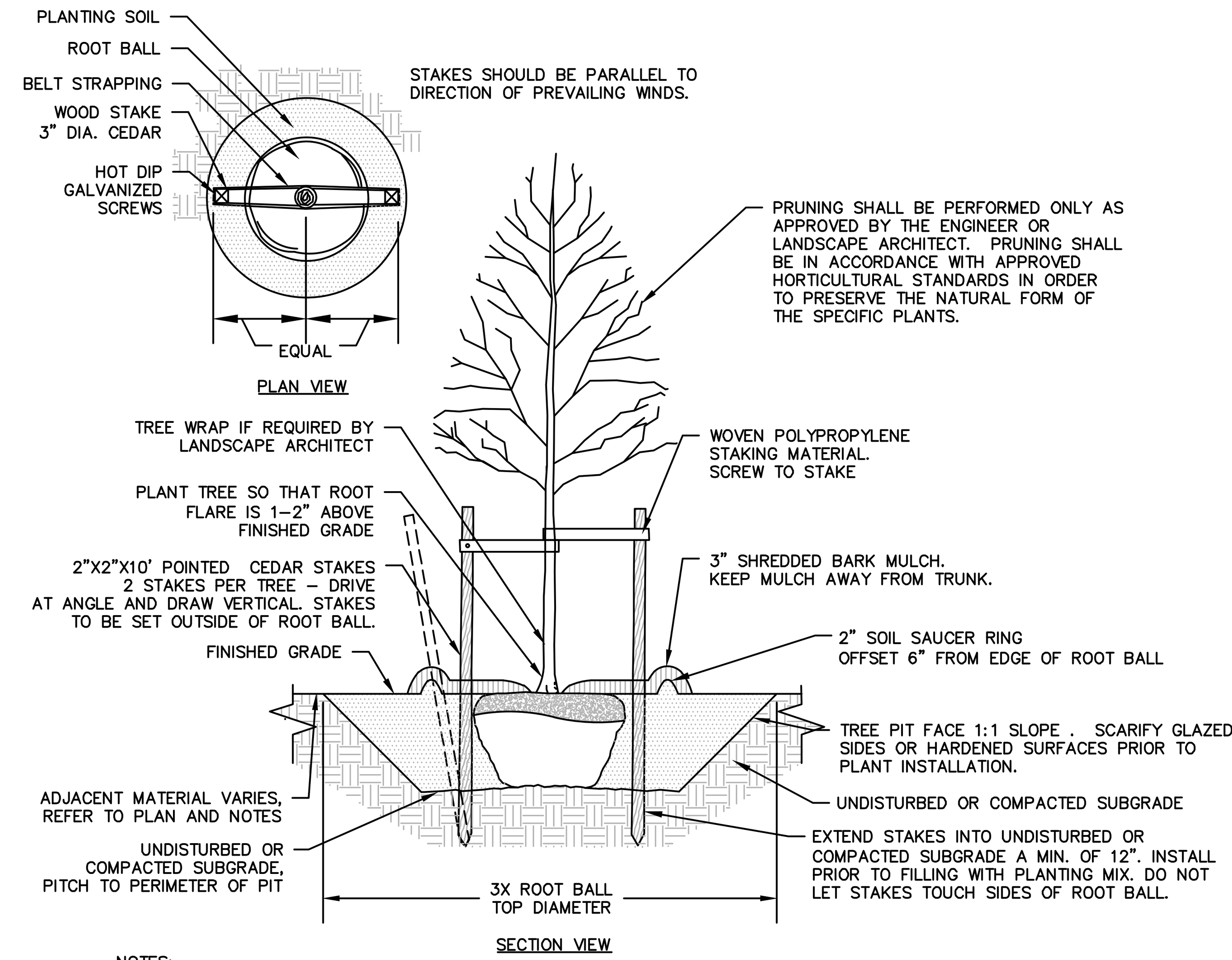

NOTES:
1. STAKING FOR TREES ON 4:1 SLOPES OR LESS THAN 3" CALIPER TO BE PERFORMED AT CONTRACTORS DISCRETION.
2. WOVEN POLYPROPYLENE STAKING MATERIAL SHALL BE DEEPROOT ARBORTIE (GREEN) OR APPROVED EQUIVALENT. MATERIAL SHALL BE LOOPED AROUND TREE THROUGH EACH OTHER, TWISTED, AND SECURED TO THE STAKE. INSTALL SPECIFIED MATERIAL IN ACCORDANCE WITH MANUFACTURER'S DIRECTIONS.
3. BEFORE IN HOLE, REMOVE BOTTOM OF CAGE. ONCE IN HOLE, REMOVE REST OF CAGE FROM ROOT BALL. REMOVE TWINE AND BURLAP FROM TOP 1/3 OF ROOT BALL – SCORE REMAINING 2/3 OF BURLAP. IF BURLAP IS SYNTHETIC OR HAS BEEN TREATED WITH ANTI-DESSICANT, COMPLETELY REMOVE IT FROM ROOT BALL.

DECIDUOUS TREE PLANTING

N.T.S

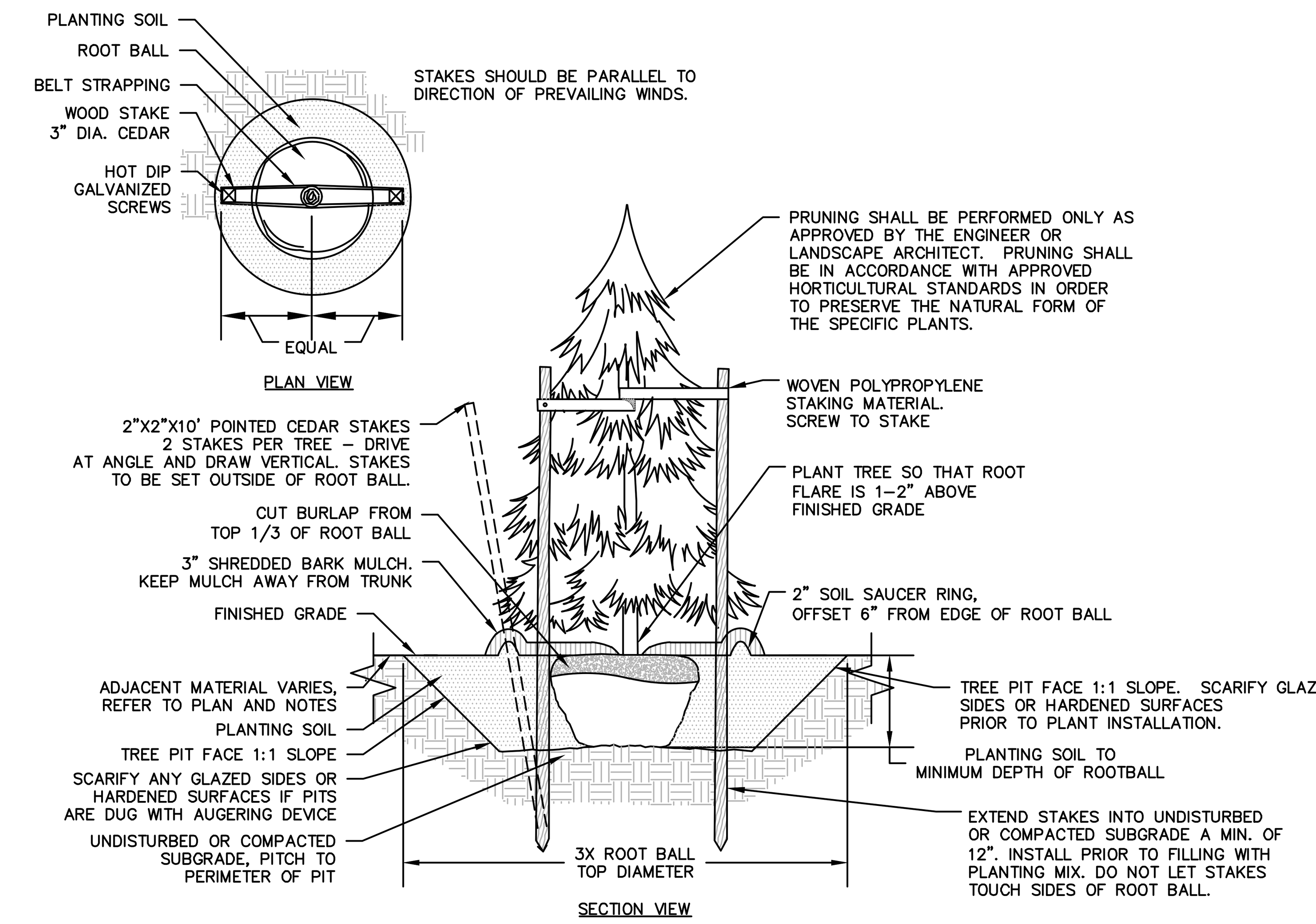

NOTES:
1. STAKING FOR TREES ON 4:1 SLOPES OR LESS TO BE PERFORMED AT CONTRACTOR'S DISCRETION.
2. WOVEN POLYPROPYLENE STAKING MATERIAL SHALL BE DEEPROOT ARBORTIE (GREEN) OR APPROVED EQUIVALENT. MATERIAL SHALL BE LOOPED AROUND TREE THROUGH EACH OTHER, TWISTED, AND SECURED TO THE STAKE. INSTALL SPECIFIED MATERIAL IN ACCORDANCE WITH MANUFACTURER'S DIRECTIONS.
3. BEFORE IN HOLE, REMOVE BOTTOM OF CAGE. ONCE IN HOLE, REMOVE REST OF CAGE FROM ROOT BALL. REMOVE TWINE AND BURLAP FROM TOP 1/3 OF ROOT BALL – SCORE REMAINING 2/3 OF BURLAP. IF BURLAP IS SYNTHETIC OR HAS BEEN TREATED WITH ANTI-DESSICENT, COMPLETELY REMOVE IT FROM ROOT BALL.

EVERGREEN TREE PLANTING

N.T.S

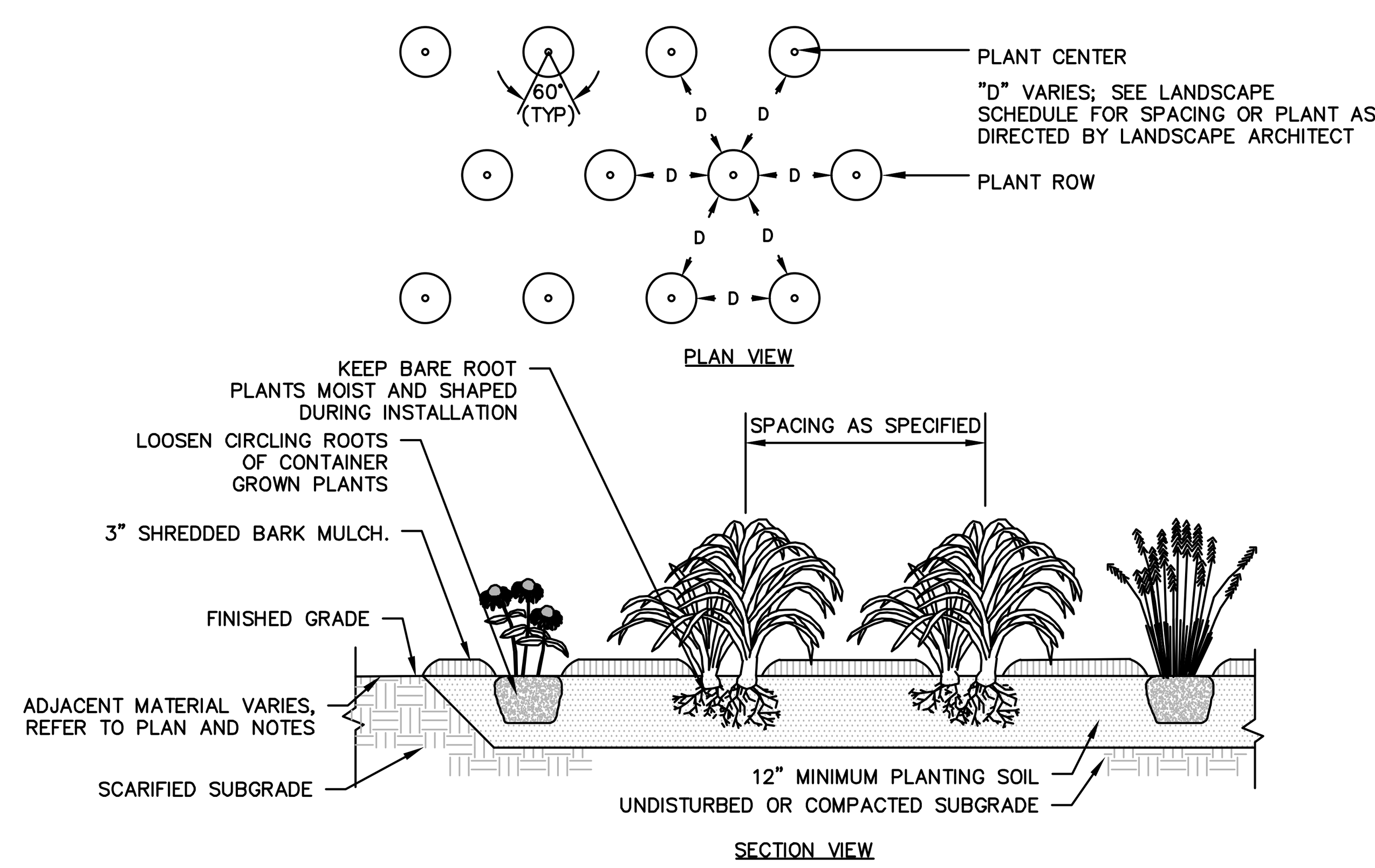

GROUNDCOVER PLANTING

N.T.S

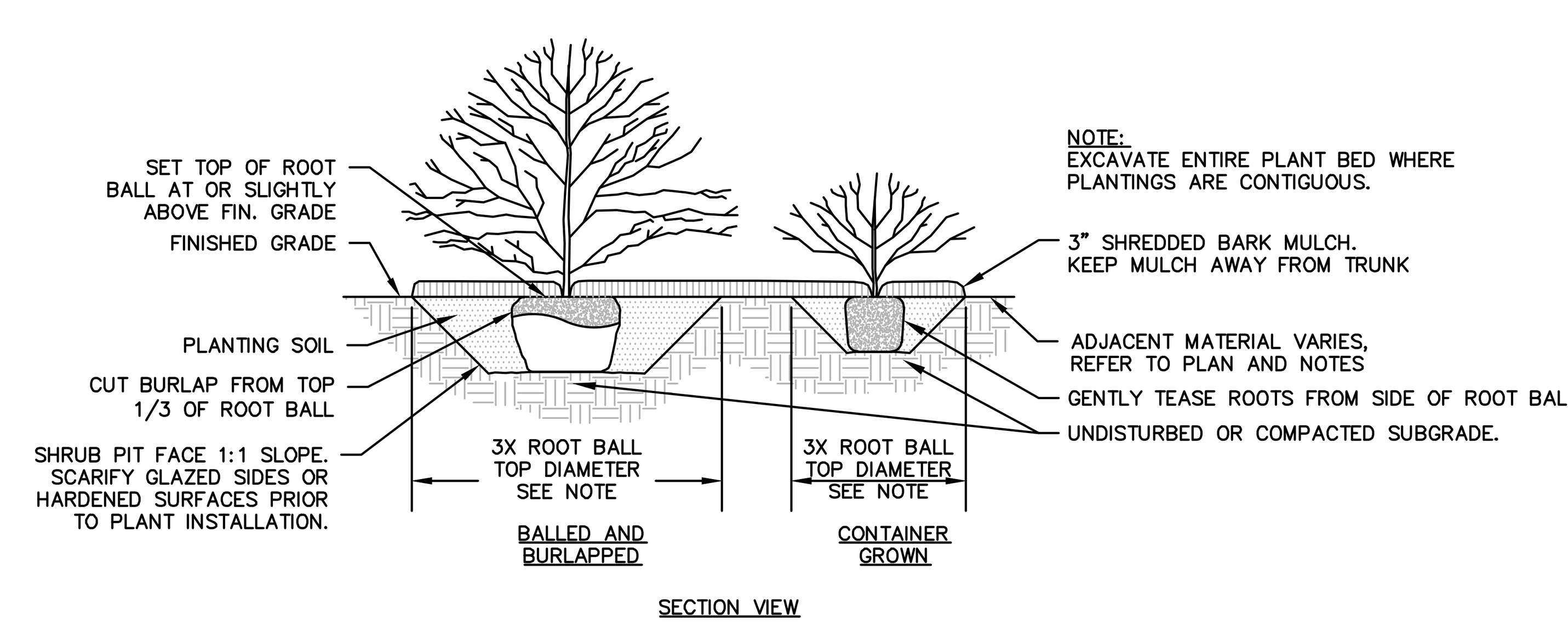

SHRUB PLANTING

N.T.S

Architecture
Engineering
Environmental
Land Surveying

BL Companies

2601 Market Place
Suite 350
Harrisburg, PA 17110
(717) 943-1665

GENIUS KIDS CHILD DEVELOPMENT CENTER PLAY LEARN GROW

PRELIMINARY/FINAL LAND DEVELOPMENT PLAN
PROPOSED K CARE - UA (GENIUS KIDS)
OLD SCHOOLHOUSE LANE
UPPER ALLEN TOWNSHIP, CUMBERLAND COUNTY, PA

REVISIONS

No.	Date	Desc.
1	09/29/2023	PER TOWNSHIP SKETCH PLAN COMMENTS
2	01/04/2024	PER TOWNSHIP PLAN REVIEW COMMENTS
3	01/24/2024	PER TOWNSHIP PLAN REVIEW COMMENTS
4	02/12/2024	PER TOWNSHIP PLAN REVIEW COMMENTS

Designed	C.L.H.
Drawn	N.M.
Reviewed	A.J.B.
Scale	1" = 20'
Project No.	2202027
Date	07/31/23
CAD File:	LL220202701

Title
LANDSCAPING NOTES AND DETAILS

Sheet No.
LL-2
No.10of 19

2/12/2024, CHERSHEY, G:\JOBS22\20\2202027\DWG\LL220202701.DWG,LL-2.

© 2024 BL COMPANIES, INC. THESE DRAWINGS SHALL NOT BE UTILIZED BY ANY PERSON, FIRM OR CORPORATION WITHOUT THE SPECIFIC WRITTEN PERMISSION OF BL COMPANIES.

FOR PERMITTING PURPOSES ONLY NOT RELEASED FOR CONSTRUCTION

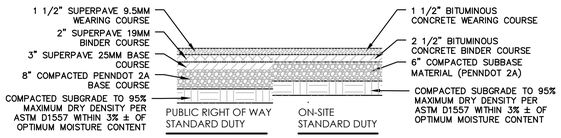

NOTES:

1. ALL PAVING MATERIALS AND INSTALLATION PROCEDURES SHALL CONFORM TO PENNDOT STANDARDS, PUB. 408.
2. PUBLIC RIGHT OF WAY STANDARD DUTY PAVEMENT SHALL CONFORM TO UPPER ALLEN TOWNSHIP CONSTRUCTION & MATERIAL SPECIFICATIONS.

BITUMINOUS PAVING DETAILS

N.T.S

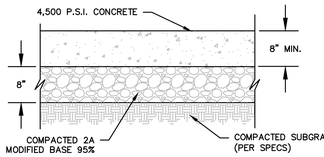

HEAVY DUTY CONCRETE PAVEMENT SECTION

N.T.S

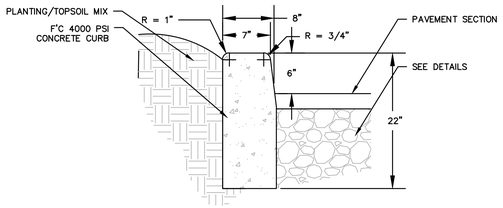

6" REVEAL CONCRETE CURB

N.T.S

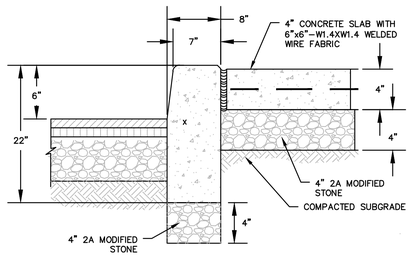

6" REVEAL CONCRETE CURB AND SIDEWALK DETAIL

N.T.S

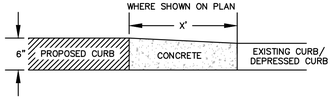

6" REVEAL CURB TAPER DETAIL TO EXISTING/DEPRESSED CURB ON SITE

N.T.S

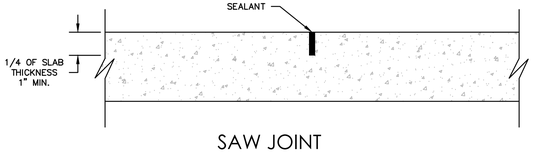

SAW JOINT

N.T.S

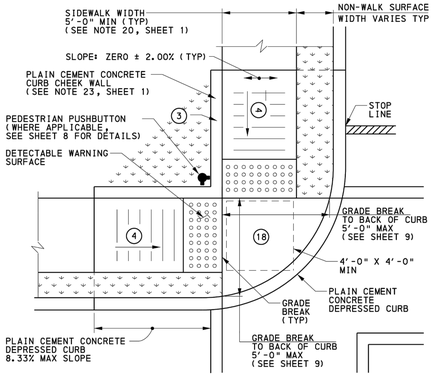

(3) OPTIONAL CONCRETE ROLLED FLARE OR REGRADE SLOPE CAN BE USED TO MEET THE ADJACENT SURFACES IN LIEU OF PLAIN CEMENT CONCRETE CURB CHEEK WALL. SEE SHEET 4.

(4) 8.33% MAX RAMP SLOPE, SEE NOTE 8 SHEET 1

(8) SLOPE: ZERO ±2.00%

(18) CURB RAMPS REQUIRE A TURNING SPACE WITH A MAXIMUM CROSS SLOPE AND LONGITUDINAL SLOPE OF 2.00% WHERE PEDESTRIANS PERFORM TURNING MANEUVERS. SEE DETAILS FOR LOCATIONS AND DIMENSIONS.

ADA COMPLIANT TYPE 1A CURB RAMP

N.T.S

COMBINATION FLARES

(4) 8.33% MAX RAMP SLOPE, SEE NOTE 8 SHEET 1.

(5) CURB RAMP WIDTH IS EQUAL TO SIDEWALK WIDTH WHEN THE SIDEWALK WIDTH IS GREATER THAN OR EQUAL TO THE MINIMUM 4'-0".

(6) SLOPE VARIES SEE RAMP DETAILS.

22. CONSTRUCT DEPRESSED CURB FOR CURB RAMPS FLUSH TO ADJACENT ROADWAY. GRADE EDGE OF ROAD ELEVATIONS AT THE FLOW LINE TO ENSURE POSITIVE DRAINAGE AND PREVENT PONDING. FOR LEVEL TURNING SPACES BEHIND DEPRESSED CURB, ADJUST SLOPES TO PROVIDE POSITIVE DRAINAGE. AT THE JOINT BETWEEN DEPRESSED CURB AND ROADWAYS, REMOVE EXCESS JOINT SEALER AND COVER THE SEALED AREA WITH A LIGHT APPLICATION OF DRY SAND.

ADA COMPLIANT ALTERNATE TYPE 4A CURB RAMP WITH COMBINATION FLARES

N.T.S

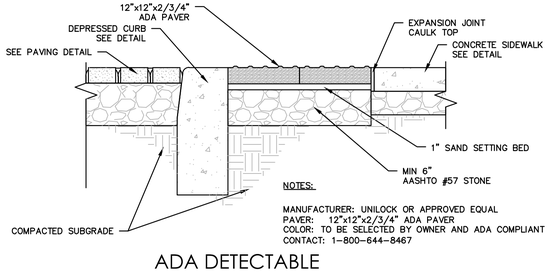

NOTES:

MANUFACTURER: UNILOCK OR APPROVED EQUAL
PAVER: 12"x12"x2/3/4" ADA PAVER
COLOR: TO BE SELECTED BY OWNER AND ADA COMPLIANT
CONTACT: 1-800-644-8467

ADA DETECTABLE WARNING PAVER DETAIL

N.T.S

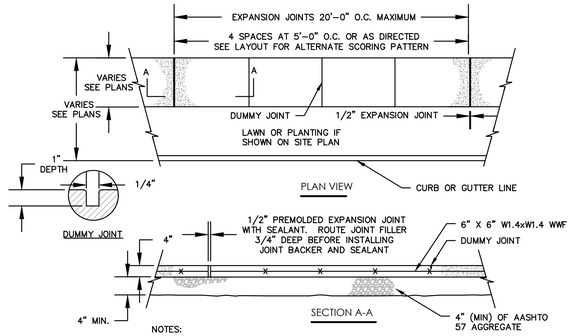

NOTES:

1. 1/4" WIDE x 1" DEEP DUMMY JOINTS SCORED AT 5'-0" INTERVALS.
2. CONSTRUCTION EXPANSION JOINTS SPACED EVERY 20' AND BETWEEN CURB AND SIDEWALK WHERE ADJACENT
3. SIDEWALK TO BE BROOM FINISHED
4. COLOR TO BE SELECTED BY OWNER

REINFORCED CONCRETE SIDEWALK

N.T.S

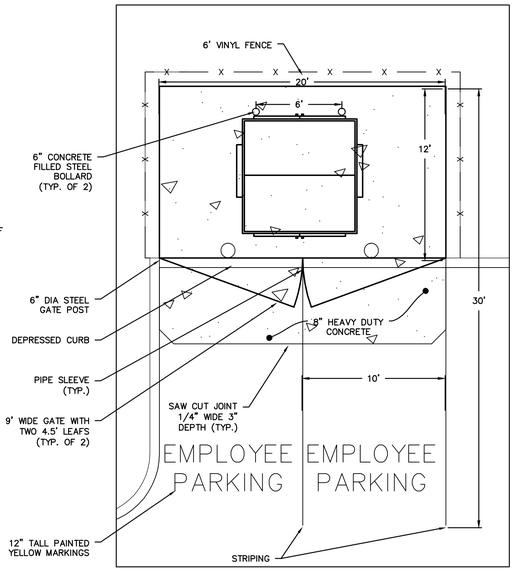

NOTES:
1. DUMPSTER GATE AND DOORS MUST BE SELF-LATCHING.

DUMPSTER ENCLOSURE PLAN

N.T.S

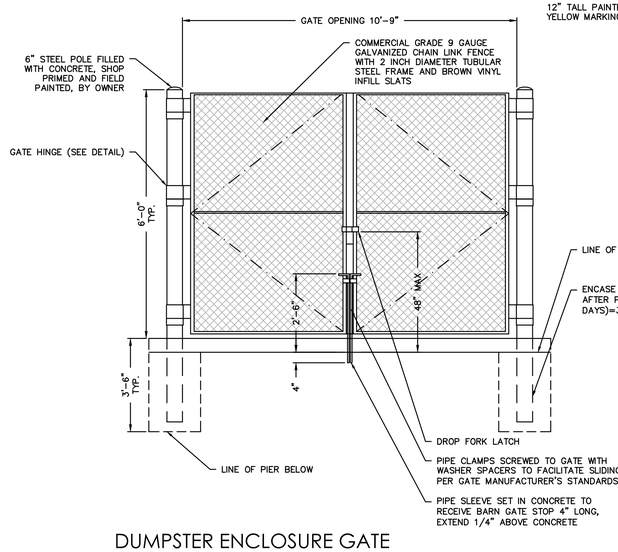

DUMPSTER ENCLOSURE GATE

N.T.S

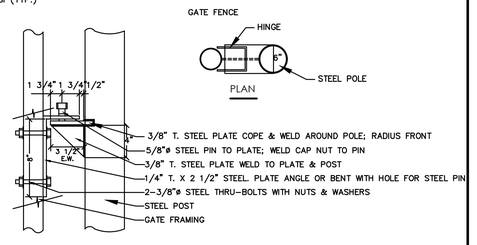

GATE HINGE

N.T.S

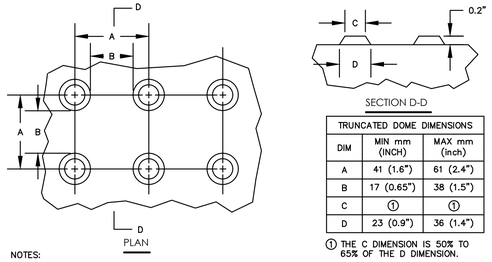

TRUNCATED DOME DIMENSIONS		
DIM	MIN mm (INCH)	MAX mm (inch)
A	41 (1.6")	61 (2.4")
B	17 (0.65")	38 (1.5")
C	①	①
D	23 (0.9")	36 (1.4")

① THE C DIMENSION IS 50% TO 65% OF THE D DIMENSION.

NOTES:

1. ALIGN DETECTABLE WARNING DOMES ON A SQUARE GRID IN THE PREDOMINANT DIRECTION OF TRAVEL TO PERMIT WHEELS TO ROLL BETWEEN THE DOMES.
2. PROVIDE DETECTABLE WARNING SURFACES THAT CONTRAST (70%) IN LIGHT REFLECTANCE WITH ADJOINING SURFACES, EITHER LIGHT-ON-DARK OR DARK-ON-LIGHT OR SAFETY YELLOW.

DETECTABLE TRUNCATED DOME DETECTABLE WARNING SURFACE

N.T.S

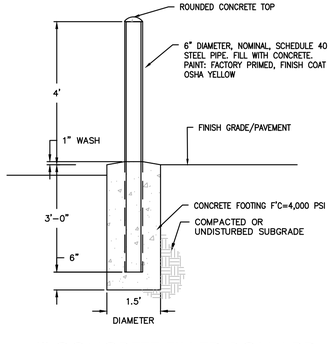

6" CONCRETE FILLED BOLLARD

N.T.S

Architecture
Engineering
Environmental
Land Surveying
BL Companies
2601 Market Place
Suite 350
Harrisburg, PA 17110
(717) 943-1665

GENIUS KIDS CHILD DEVELOPMENT CENTER PLAY LEARN GROW

PRELIMINARY/FINAL LAND DEVELOPMENT PLAN

PROPOSED K CARE - UA (GENIUS KIDS)

OLD SCHOOLHOUSE LANE
UPPER ALLEN TOWNSHIP, CUMBERLAND COUNTY, PA

REVISIONS		
No.	Date	Desc.
1	09/29/2023	PER TOWNSHIP SKETCH PLAN COMMENTS
2	01/04/2024	PER TOWNSHIP PLAN REVIEW COMMENTS
3	01/24/2024	PER TOWNSHIP PLAN REVIEW COMMENTS
4	02/12/2024	PER TOWNSHIP PLAN REVIEW COMMENTS

Designed	C.L.H.
Drawn	N.M.
Reviewed	A.J.B.
Scale	1" = 20'
Project No.	2202027
Date	07/31/23
CAD File: DN220202701	

Title

DETAIL SHEET

Sheet No.

DN-1
No.11of 19

3/7/2024, CHERSHEY, G:\JOBS\2X\2202027\DWG\DN220202701.DWG, DN-1

© 2024 BL COMPANIES, INC. THESE DRAWINGS SHALL NOT BE UTILIZED BY ANY PERSON, FIRM OR CORPORATION WITHOUT THE SPECIFIC WRITTEN PERMISSION OF BL COMPANIES.

FOR PERMITTING PURPOSES ONLY NOT RELEASED FOR CONSTRUCTION

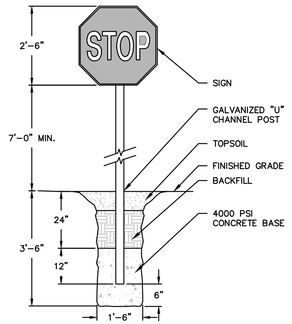

NOTES:
1. CONSTRUCT SIGN IN ACCORDANCE WITH PENNDOT SPECIFICATIONS.

STOP SIGN DETAIL

N.T.S

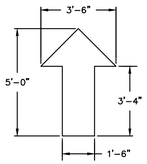

NOTES:
1. WHITE (ARROWS TO BE CENTERED IN TRAVEL LANE)

PAINTED TRAFFIC ARROW DETAIL

N.T.S

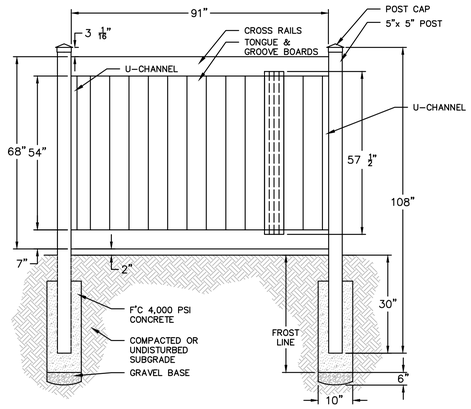

NOTES:
1. VERANDA 6 FT. H x 8 FT. W LINDEN WHITE VINYL PRO PRIVACY FENCE AS SOLD BY HOME DEPOT, MODEL #73013028, OR APPROVED EQUAL

6' VINYL FENCE

N.T.S

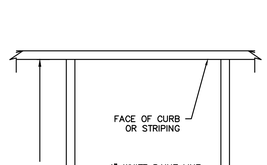

NOTE:
1. PROVIDE 2 COATS OF PAINT ON ALL SURFACES.
2. SEE PLAN FOR ACTUAL SPACE LOCATION AND DIMENSIONS.

TYPICAL PARKING SPACE DETAIL

N.T.S

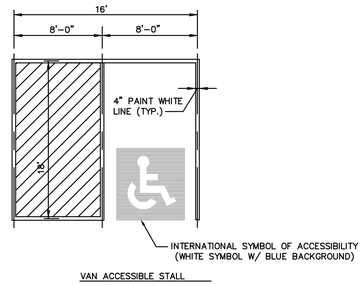

NOTE: LAYOUT SHALL CONFORM TO THE REQUIREMENTS OF THE UNIFORM FEDERAL ACCESSIBILITY STANDARDS, SECTION 4.30. & 2010 ADA

TYPICAL ADA PARKING SPACE DETAIL

N.T.S

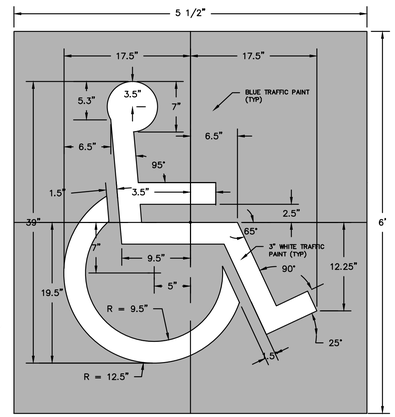

SEE SITE PLAN FOR LOCATIONS

ADA ACCESSIBLE SYMBOL

N.T.S

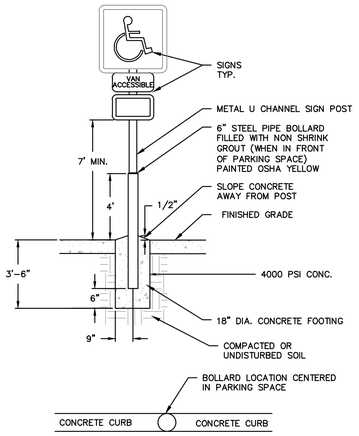

6" CONCRETE-FILLED STEEL PIPE SIGN POST

N.T.S

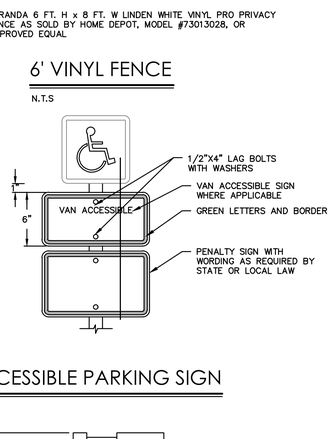

ACCESSIBLE PARKING SIGN

N.T.S

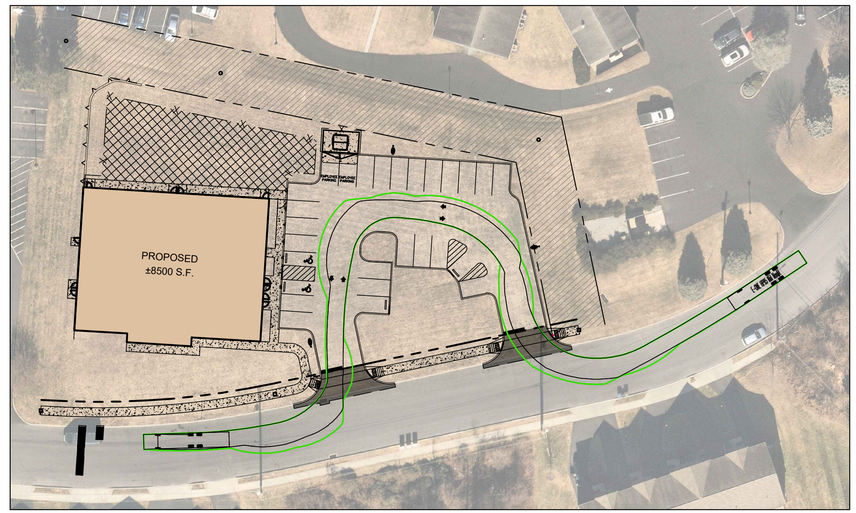

AUTOTURN UPPER ALLEN TOWNSHIP FIRETRUCK

N.T.S

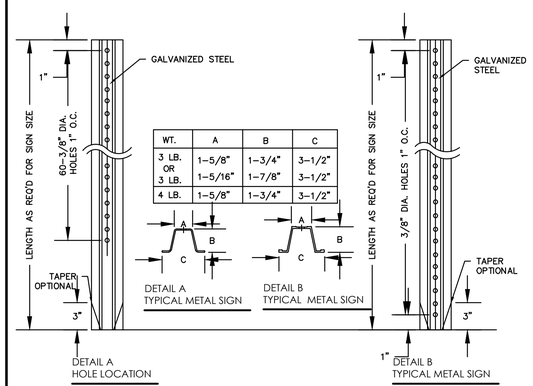

NOTES:
1. STEEL FOR POSTS SHALL CONFORM TO THE MECHANICAL REQUIREMENTS OF ASTM A 499-81 GRADE 60 AND TO THE CHEMICAL REQUIREMENTS OF ASTM AI-76 CARBON STEEL TEE RAIL HAVING NOMINAL WEIGHT OF "30 LBS OR GREATER PER LINEAR FOOT.

2. AFTER FABRICATION ALL STEEL POSTS SHALL BE GALVANIZED TO MEET THE REQUIREMENTS OF ASTM A-123.

3. SIGN MOUNTING HEIGHT TO BE PER MUTCD REQUIREMENTS.

4. ALL SIGN POSTS SHALL HAVE "BREAK AWAY" FEATURES THAT MEET AASHTO REQUIREMENTS CONTAINED IN "STANDARD SPECIFICATIONS FOR STRUCTURAL SUPPORTS FOR HIGHWAY SIGNS, LUMINARIES AND TRAFFIC SIGNALS". THE "BREAK AWAY" FEATURES SHALL BE STRUCTURALLY ADEQUATE TO CARRY THE SIGN SHOWN ON THE PLANS AT 60 MPH WIND LOADINGS. INSTALLATIONS SHALL BE IN ACCORDANCE WITH MANUFACTURERS RECOMMENDATIONS.

TYPICAL METAL SIGN POST

N.T.S

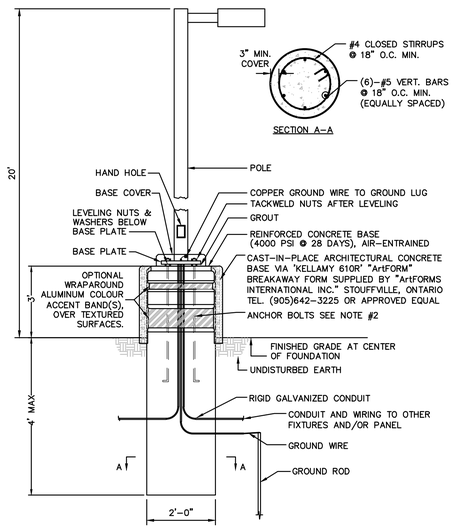

NOTES:
1. CONTRACTOR SHALL FURNISH DETAILED DRAWINGS WITH DESIGN CALCULATIONS FOR THE PROPOSED FOUNDATION PRIOR TO CONSTRUCTION AND ORDERING FOUNDATION MATERIALS. DRAWINGS AND CALCULATIONS MUST BE SIGNED AND SEALED BY A PENNSYLVANIA REGISTERED ENGINEER.
2. ANCHOR BOLTS FURNISHED WITH POLE. BOLT PATTERN, SIZE AND LENGTH AS SPECIFIED BY MANUFACTURER.
3. CONTRACTOR SHALL FURNISH AND INSTALL CONDUIT AND WIRING PER NEC REQUIREMENTS
4. FORM RELEASE AGENT HAS BEEN FACTORY-APPLIED TO INSIDE SURFACE OF "ArtFORM".

TYPICAL LIGHT POLE AND BASE DETAIL

N.T.S



NOTES:
SEE SITE PLAN FOR PARKING SPACE SIZE AND FOR PARKING BLOCK LOCATIONS. [PARKING BLOCKS SHALL BE AS MANUFACTURED BY DURABLE CORPORATION, NORWALK OHIO (OR APPROVED EQUAL) AND SHALL BE COLOR BLUE FEDERAL STANDARD 595B

AUTOMOBILE PARKING BLOCK

N.T.S

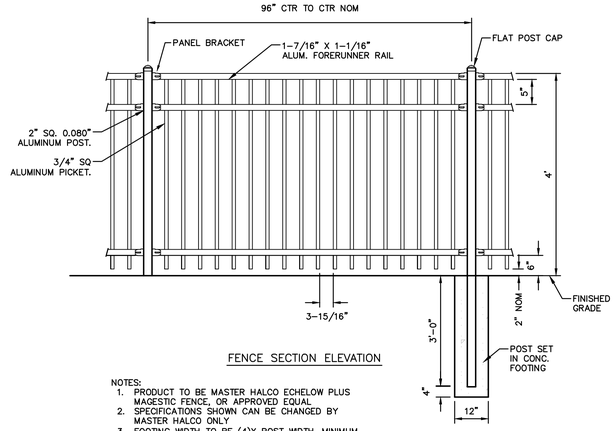

NOTES:
1. PRODUCT TO BE MASTER HALCO ECHELOW PLUS MAGESTIC FENCE, OR APPROVED EQUAL
2. SPECIFICATIONS SHOWN CAN BE CHANGED BY MASTER HALCO ONLY
3. FOOTING WIDTH TO BE (4)X POST WIDTH. MINIMUM DEPTH 36" [914 MM]

FENCE SECTION ELEVATION

4" PERIMETER FENCING

N.T.S

Architecture
Engineering
Environmental
Land Surveying
BL Companies
2601 Market Place
Suite 350
Harrisburg, PA 17110
(717) 943-1665

GENIUS KIDS CHILD DEVELOPMENT CENTER PLAY. LEARN. GROW.

PRELIMINARY/FINAL LAND DEVELOPMENT PLAN
PROPOSED K CARE - UA (GENIUS KIDS)
OLD SCHOOLHOUSE LANE
UPPER ALLEN TOWNSHIP, CUMBERLAND COUNTY, PA

REVISIONS

No.	Date	Desc.
1	09/29/2023	PER TOWNSHIP SKETCH PLAN COMMENTS
2	01/04/2024	PER TOWNSHIP PLAN REVIEW COMMENTS
3	01/24/2024	PER TOWNSHIP PLAN REVIEW COMMENTS
4	02/12/2024	PER TOWNSHIP PLAN REVIEW COMMENTS

Designed	C.L.H.
Drawn	N.M.
Reviewed	A.J.B.
Scale	1" = 20'
Project No.	2202027
Date	07/31/23
CAD File:	DN220202701

Title
DETAIL SHEET

Sheet No.
DN-2
No.12of 19

2/12/2024, CHERWAY, G:\CHERWAY\DRAWINGS\DWG\DN220202701.DWG, DN-2

© 2024 BL COMPANIES, INC.. THESE DRAWINGS SHALL NOT BE UTILIZED BY ANY PERSON, FIRM OR CORPORATION WITHOUT THE SPECIFIC WRITTEN PERMISSION OF BL COMPANIES.

FOR PERMITTING PURPOSES ONLY NOT RELEASED FOR CONSTRUCTION

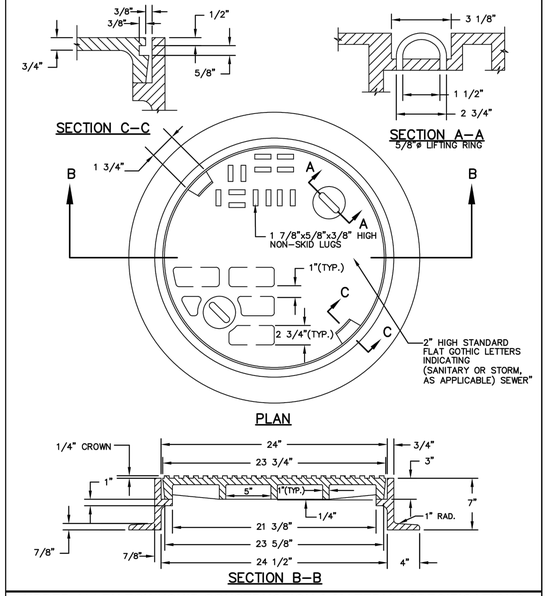

UPPER ALLEN TOWNSHIP CONSTRUCTION & MATERIAL SPECIFICATIONS

C.S.Davidson, Inc.
Excellence in Civil Engineering
38 N. DUKE STREET YORK, PA • PHONE (717) 846–4805 • FAX (717)846–5811
50 WEST MIDDLE ST. GETTYSBURG, PA • PHONE (717) 337–3021 • FAX (717) 337–0782
315 W. JAMES ST., SUITE 102 LANCASTER, PA • PHONE (717) 481–2991 • FAX (717) 481–8690
WWW.CSDAVIDSON.COM

MANHOLE FRAME AND COVER DETAIL

UPPER ALLEN TWP. CUMBERLAND COUNTY , PENNSYLVANIA

DRAWN BY	CJM
CHECKED BY	
SCALE	N.T.S.
DATE	9/14/16
DWG. NO.	HT02601-9
FILE NO.	3566.9.03.00

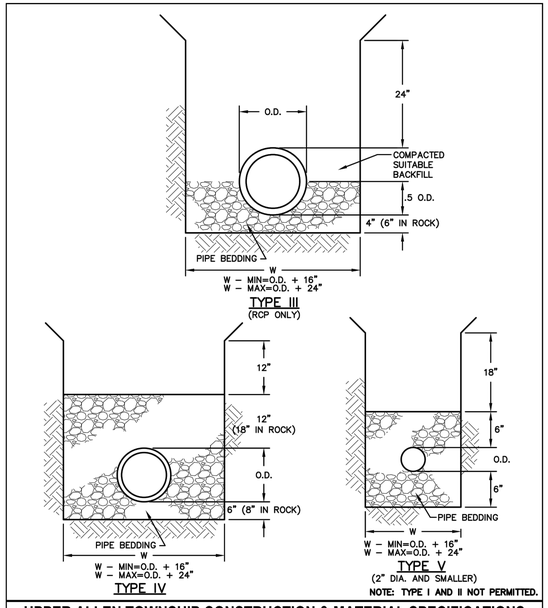

NOTE: TYPE I AND II NOT PERMITTED.

UPPER ALLEN TOWNSHIP CONSTRUCTION & MATERIAL SPECIFICATIONS

C.S.Davidson, Inc.
Excellence in Civil Engineering
38 N. DUKE STREET YORK, PA • PHONE (717) 846–4805 • FAX (717)846–5811
50 WEST MIDDLE ST. GETTYSBURG, PA • PHONE (717) 337–3021 • FAX (717) 337–0782
315 W. JAMES ST., SUITE 102 LANCASTER, PA • PHONE (717) 481–2991 • FAX (717) 481–8690
WWW.CSDAVIDSON.COM

PIPE BEDDING DETAILS

UPPER ALLEN TWP. CUMBERLAND COUNTY , PENNSYLVANIA

DRAWN BY	CJM
CHECKED BY	
SCALE	N.T.S.
DATE	9/14/16
DWG. NO.	HT02221-1
FILE NO.	3566.9.03.00

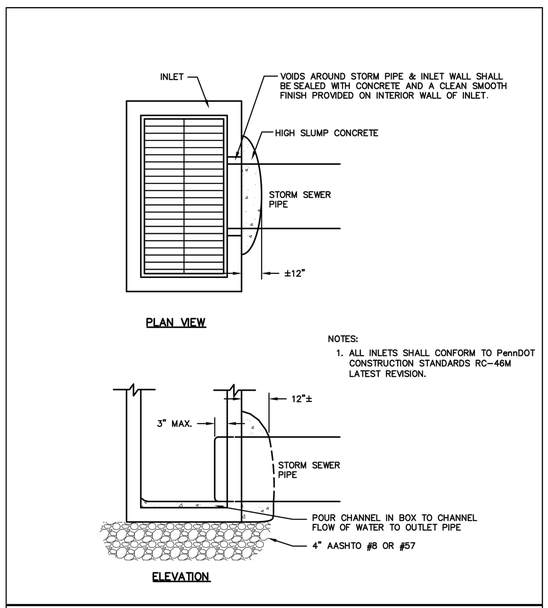

UPPER ALLEN TOWNSHIP CONSTRUCTION & MATERIAL SPECIFICATIONS

C.S.Davidson, Inc.
Excellence in Civil Engineering
38 N. DUKE STREET YORK, PA • PHONE (717) 846–4805 • FAX (717)846–5811
50 WEST MIDDLE ST. GETTYSBURG, PA • PHONE (717) 337–3021 • FAX (717) 337–0782
315 W. JAMES ST., SUITE 102 LANCASTER, PA • PHONE (717) 481–2991 • FAX (717) 481–8690
WWW.CSDAVIDSON.COM

INLET/STORM PIPE INSTALLATION DETAIL

UPPER ALLEN TWP. CUMBERLAND COUNTY , PENNSYLVANIA

DRAWN BY	CJM
CHECKED BY	
SCALE	N.T.S.
DATE	9/14/16
DWG. NO.	HT02602-1
FILE NO.	3566.9.03.00

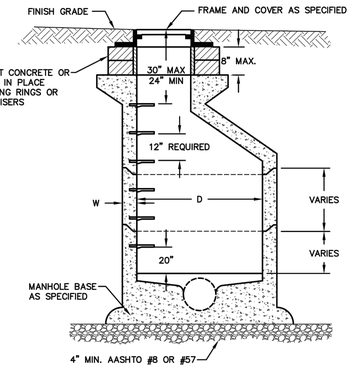

D	W
4'–0"	5"
5'–0"	6"
6'–0"	7"

* DOUBLE RAMNECK BETWEEN ALL ADJUSTMENTS AND FRAME

UPPER ALLEN TOWNSHIP CONSTRUCTION & MATERIAL SPECIFICATIONS

C.S.Davidson, Inc.
Excellence in Civil Engineering
38 N. DUKE STREET YORK, PA • PHONE (717) 846–4805 • FAX (717)846–5811
50 WEST MIDDLE ST. GETTYSBURG, PA • PHONE (717) 337–3021 • FAX (717) 337–0782
315 W. JAMES ST., SUITE 102 LANCASTER, PA • PHONE (717) 481–2991 • FAX (717) 481–8690
WWW.CSDAVIDSON.COM

STANDARD MANHOLE DETAIL

UPPER ALLEN TWP. CUMBERLAND COUNTY , PENNSYLVANIA

DRAWN BY	CJM
CHECKED BY	
SCALE	N.T.S.
DATE	9/14/16
DWG. NO.	HT02601-3
FILE NO.	3566.9.03.00

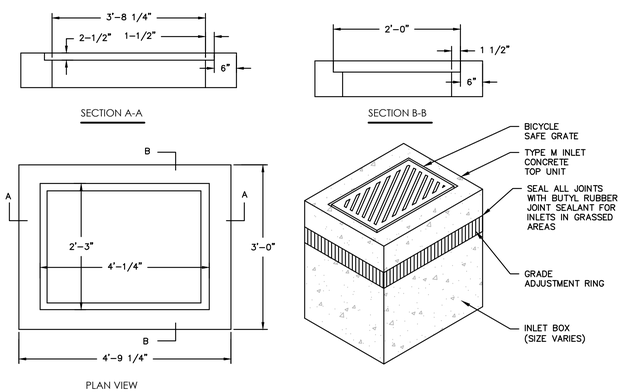

NOTES:
1. ALL CONSTRUCTION SHALL BE IN ACCORDANCE WITH PENN DOT PUBLICATION 408, SECTION 605 AND STANDARDS FOR ROADWAY CONSTRUCTION, RC–45 AND RC–46. CONTRACTOR SHALL VERIFY INLET BOX SIZING BASED ON PIPE SIZES AND ALIGNMENT PRIOR TO ORDERING PRECAST STRUCTURES.
2. ALL DRAINAGE STRUCTURES SHALL HAVE POURED–IN–PLACE CONCRETE CHANNEL BOTTOMS.

TYPE "M" INLET

N.T.S

UGI Utilities, Inc.
1500 Paxton Street
Post Office Box 3992
Harrisburg, PA 17105-3565
(717)234-5951 Telephone

UGI UTILITIES
Commercial "EBO" Services
(Excavation and Backfill By Others)

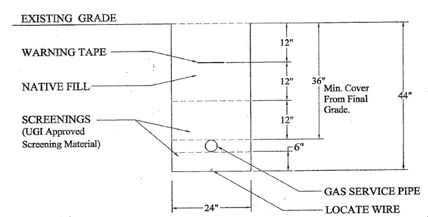

1) DEVELOPER MUST OPEN ENTIRE SERVICE DITCH AND HAVE UGI APPROVED SCREENING MATERIAL ON SITE BEFORE THE SERVICE CAN BE INSTALLED.
2) TRENCH DEPTH MUST BE 44" FROM EXISTING GRADE.
3) There must be a minimum of 3 feet between any gas meter and all windows or electric meters.
4) Developer must provide all required UGI approved screening material.
5) Developer must provide a minimum of 24" of native fill or 2A modified over the top of screenings.
6) Warning tape to be installed by developer 12" below grade.
7) UGI will provide warning tape. Developer must install warning tape as noted above.

At Least Three Working Days Before You Dig Call 1-800-242-1776 For Location Of Utilities.

If You Hit A Gas Line, Immediately Call UGI At 1-800-609-4884.

Rev 08/02

GAS TRENCH DETAIL

N.T.S.

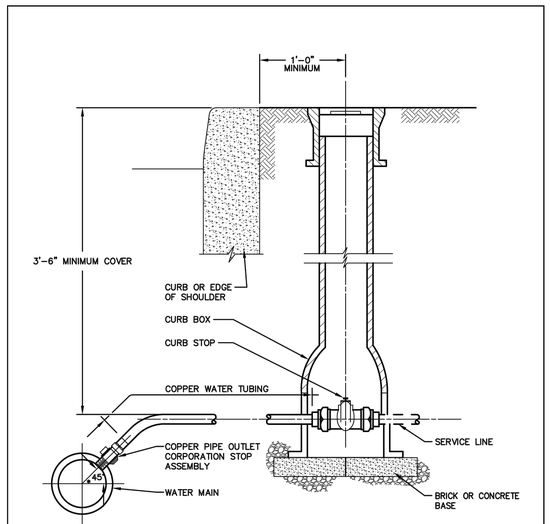

UPPER ALLEN TOWNSHIP CONSTRUCTION & MATERIAL SPECIFICATIONS

C.S.Davidson, Inc.
Excellence in Civil Engineering
38 N. DUKE STREET YORK, PA • PHONE (717) 846–4805 • FAX (717)846–5811
50 WEST MIDDLE ST. GETTYSBURG, PA • PHONE (717) 337–3021 • FAX (717) 337–0782
315 W. JAMES ST., SUITE 102 LANCASTER, PA • PHONE (717) 481–2991 • FAX (717) 481–8690
WWW.CSDAVIDSON.COM

WATER SERVICE INSTALLATION

UPPER ALLEN TWP. CUMBERLAND COUNTY , PENNSYLVANIA

DRAWN BY	CJM
CHECKED BY	
SCALE	N.T.S.
DATE	9/14/16
DWG. NO.	HT02642-1
FILE NO.	3566.9.03.00

Architecture
Engineering
Environmental
Land Surveying
BL Companies
2601 Market Place
Suite 350
Harrisburg, PA 17110
(717) 943-1665

GENIUS KIDS
CHILD DEVELOPMENT CENTER
PLAY • LEARN • GROW

PRELIMINARY/FINAL LAND DEVELOPMENT PLAN

PROPOSED K CARE - UA (GENIUS KIDS)

OLD SCHOOLHOUSE LANE
UPPER ALLEN TOWNSHIP, CUMBERLAND COUNTY, PA

REVISIONS

No.	Date	Desc.
1	09/29/2023	PER TOWNSHIP SKETCH PLAN COMMENTS
2	01/04/2024	PER TOWNSHIP PLAN REVIEW COMMENTS
3	01/24/2024	PER TOWNSHIP PLAN REVIEW COMMENTS
4	02/12/2024	PER TOWNSHIP PLAN REVIEW COMMENTS

Designed	C.L.H.
Drawn	N.M.
Reviewed	A.J.B.
Scale	1" = 20'
Project No.	2202027
Date	07/31/23

CAD File: DN2202027O1

Title
DETAIL SHEET

Sheet No.
DN-3
No.13of 19

2/12/2024, C:\DRAWINGS\2022\2202027\CIVIL\DN2202027O1.DWG, DN-3
© 2024 BL COMPANIES, INC. THESE DRAWINGS SHALL NOT BE UTILIZED BY ANY PERSON, FIRM OR CORPORATION WITHOUT THE SPECIFIC WRITTEN PERMISSION OF BL COMPANIES.
FOR PERMITTING PURPOSES ONLY NOT RELEASED FOR CONSTRUCTION

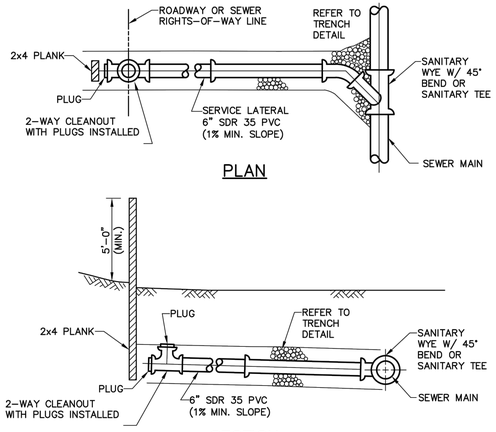

NOTES:

1. 2-WAY CLEANOUT NOT TO BE LOCATED IN SIDEWALK OR BENEATH OTHER CURB LINE UTILITIES.
2. THERE SHALL BE A 10 FOOT HORIZONTAL SEPARATION BETWEEN THE WATER SERVICE AND THE SERVICE LATERAL/BUILDING SEWER.
3. 2-WAY CLEANOUT TO BE LOCATED ON TOWNSHIP R/W LINE AND LOCATION TO BE SITE SPECIFIC WITH RESPECT TO CURB AND SIDEWALK.
4. WHERE 2-WAY CLEANOUT IS NOT REQUIRED, SERVICE CONNECTION SHALL BE EXTENDED TO THE RIGHTS-OF-WAY LINE AND PLUGGED.
5. DETECTION TAPE REQUIRED IN PIPE TRENCH AT A DEPTH OF NO MORE THAN 12-INCHES BELOW FINAL SURFACE GRADE OR PAVEMENT SUBGRADE.
6. 2-WAY CLEANOUTS MAY ALSO BE USED FOR TESTING AND OBSERVATION.

FILE NAME:LAT-1-SHALLOW.DWG

STANDARD DETAILS

SERVICE LATERAL – SHALLOW SEWER

UPPER ALLEN TOWNSHIP

DATE	REVISIONS
3/08	DWG. CREATED
12/13	DWG. UPDATED
1/17	DWG./NOTE REVISIONS
SCALE: NO SCALE	DWG. NO.: LAT-1

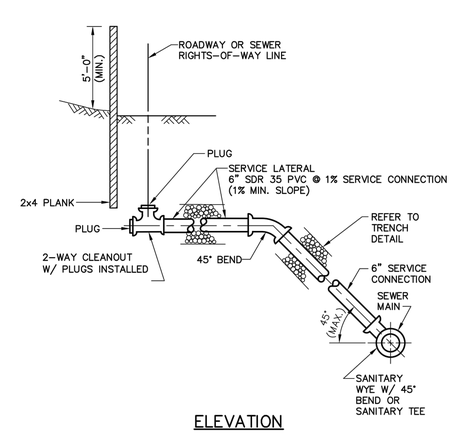

NOTES:

1. 2-WAY CLEANOUT NOT TO BE LOCATED IN SIDEWALK OR BENEATH OTHER CURB LINE UTILITIES.
2. THERE SHALL BE A 10 FOOT HORIZONTAL SEPARATION BETWEEN THE WATER SERVICE AND THE SERVICE LATERAL/BUILDING SEWER.
3. 2-WAY CLEANOUT TO BE LOCATED ON TOWNSHIP R/W AND LOCATION TO BE SITE SPECIFIC WITH RESPECT TO CURB AND SIDEWALK.
4. WHERE 2-WAY CLEANOUT IS NOT REQUIRED, SERVICE CONNECTION SHALL BE EXTENDED TO THE RIGHTS-OF-WAY LINE AND PLUGGED.
5. DETECTION TAPE REQUIRED IN PIPE TRENCH AT A DEPTH OF NO MORE THAN 12-INCHES BELOW FINAL SURFACE GRADE OR PAVEMENT SUBGRADE.
6. 2-WAY CLEANOUTS MAY ALSO BE USED FOR TESTING AND OBSERVATION.

FILE NAME:LAT-2-DEEP.DWG

STANDARD DETAILS

SERVICE LATERAL – DEEP SEWER

UPPER ALLEN TOWNSHIP

DATE	REVISIONS
3/08	DWG. CREATED
12/13	DWG. UPDATED
1/17	DWG./NOTE REVISIONS
SCALE: NO SCALE	DWG. NO.: LAT-2

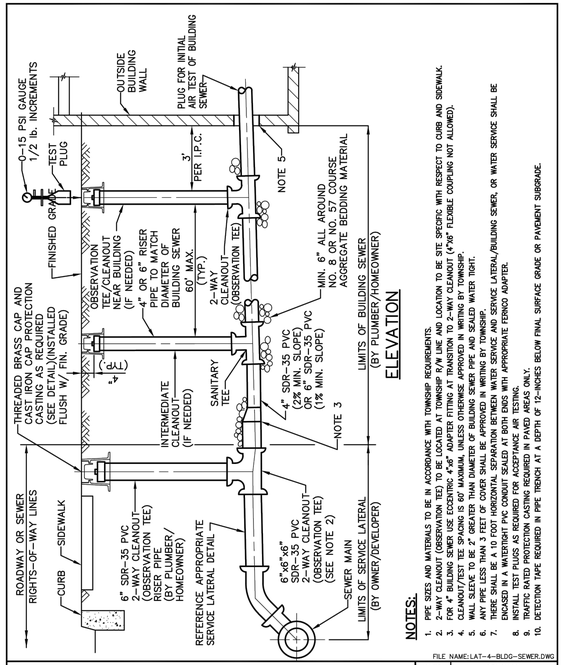

NOTES:

1. PIPES AND MATERIALS TO BE IN ACCORDANCE WITH TOWNSHIP REQUIREMENTS.
2. 2-WAY CLEANOUT (OBSERVATION TEE) TO BE LOCATED AT TOWNSHIP R/W LINE AND LOCATION TO BE SITE SPECIFIC WITH RESPECT TO CURB AND SIDEWALK.
3. FOR 4" BUILDING SEWER USE ECCENTRIC 4"x6" ADAPTER FITTING AT TRANSITION TO 2-WAY CLEANOUT (4"x6" FLEXIBLE COUPLING NOT ALLOWED).
4. CLEANOUT/TEST TEE SPACING IS 60' MAXIMUM, UNLESS OTHERWISE APPROVED IN WRITING BY TOWNSHIP.
5. WALL SLEEVE TO BE 2" GREATER THAN DIAMETER OF BUILDING SEWER PIPE AND SEALED WATER TIGHT.
6. THERE SHALL BE A 10 FOOT HORIZONTAL SEPARATION BETWEEN WATER SERVICE AND SERVICE LATERAL/BUILDING SEWER, OR WATER SERVICE SHALL BE ENCASED IN A WATERTIGHT PVC CONDUIT SEALED AT BOTH ENDS WITH APPROPRIATE FERNCO ADAPTER.
7. INSTALL TEST PLUGS AS REQUIRED FOR ACCEPTANCE AIR TESTING.
8. TRAFFIC RATED PROTECTION CASTING REQUIRED IN PAVED AREAS ONLY.
9. DETENTION TAPE REQUIRED IN PIPE TRENCH AT A DEPTH OF 12-INCHES BELOW FINAL SURFACE GRADE OR PAVEMENT SUBGRADE.
10. DETENTION TAPE REQUIRED IN PIPE TRENCH AT A DEPTH OF 12-INCHES BELOW FINAL SURFACE GRADE OR PAVEMENT SUBGRADE.

FILE NAME:LAT-4-BLDG-SEWER.DWG

STANDARD DETAILS

BUILDING SEWER DETAIL

UPPER ALLEN TOWNSHIP

DATE	REVISIONS
3/08	DWG. CREATED
12/13	DWG. UPDATED
1/17	NOTE REVISIONS
SCALE: NO SCALE	DWG. NO.: LAT-4

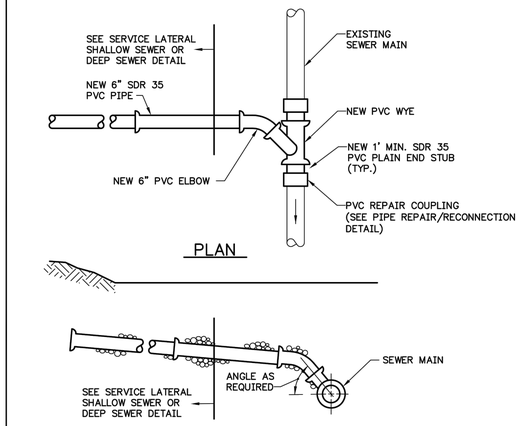

NOTES:

1. EXISTING MAIN SEWER TO BE SAW CUT.
2. IN CERTAIN CIRCUMSTANCES USE OF A TAPPING SADDLE MAY BE PERMITTED OR REQUIRED, INCLUDING CONNECTIONS TO LARGER DIAMETER INTERCEPTORS SEWERS, WITH TOWNSHIP APPROVAL (SEE DETAIL).

FILE NAME:LAT-5-SERVICE.DWG

STANDARD DETAILS

SERVICE LATERAL CONNECTION TO EXISTING SEWER MAIN

UPPER ALLEN TOWNSHIP

DATE	REVISIONS
3/08	DWG. CREATED
SCALE: NO SCALE	DWG. NO.: LAT-5

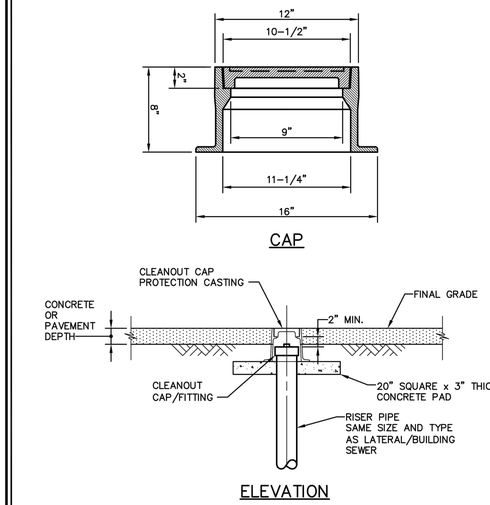

NOTES:

1. CASTING FRAME AND COVER SHALL BE HEAVY DUTY WITH "S" MARKING ON COVER. (EAST JORDAN IRON WORKS CATALOG No. 1565, OR APPROVED EQUAL.)

FILE NAME:LAT-8-CO-CAP.DWG

STANDARD DETAILS

CAP PROTECTION CASTING FOR CLEANOUT COVER IN VEHICULAR TRAFFIC AREAS

UPPER ALLEN TOWNSHIP

DATE	REVISIONS
3/08	DWG. CREATED
1/17	NOTE/TITLE REVISIONS
SCALE: NO SCALE	DWG. NO.: LAT-8

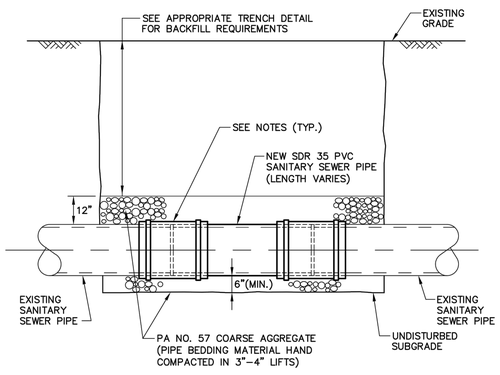

NOTES:

1. SLEEVES, ADAPTERS AND COUPLINGS.
   A. PVC TO PVC CONNECTION USE; GASKETED PVC REPAIR SLEEVE.
   B. PVC TO TCP/VCP CONNECTION; USE FERNCO STAINLESS STEEL ANTI-SHEAR COLLAR RUBBER ADAPTER, OR APPROVED EQUAL.
   C. PVC TO DIP/CIP CONNECTION; USE MECHANICAL JOINT COUPLING.
   D. PVC/DIP TO ACP CONNECTION; USE MECHANICAL JOINT COUPLING OR STAINLESS STEEL ANTI-SHEAR COLLAR RUBBER ADAPTER, AS APPROVED BY TOWNSHIP.
   E. DIP/CIP TO DIP/CIP CONNECTION; USE MECHANICAL JOINT COUPLING.
2. MECHANICAL JOINT COUPLINGS TO BE SMITH-BLAIR, DRESSER, OR APPROVED EQUAL.
3. RECONNECTIONS TO BE AIR TESTED IN ACCORDANCE WITH SPECIFICATIONS OR AS DIRECTED BY TOWNSHIP.

FILE NAME:SEWER-2-PIPE-RECONNECTION.DWG

STANDARD DETAILS

PIPE REPAIR/RECONNECTION DETAIL

UPPER ALLEN TOWNSHIP

DATE	REVISIONS
3/08	DWG. CREATED
12/09	GENERAL REVISIONS
12/13	DWG. UPDATED
1/17	NOTE REVISIONS
SCALE: NO SCALE	DWG. NO.: SEW-2

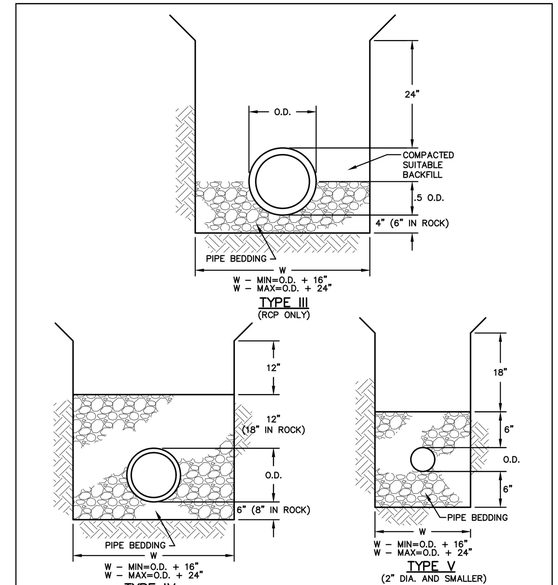

NOTE: TYPE I AND II NOT PERMITTED.

UPPER ALLEN TOWNSHIP CONSTRUCTION & MATERIAL SPECIFICATIONS

C.S.Davidson, Inc.
Excellence in Civil Engineering
38 N. DUKE STREET YORK, PA • PHONE (717) 846-4805 • FAX (717)846-5811
50 WEST MIDDLE ST. GETTYSBURG, PA • PHONE (717) 337-3025 • FAX (717) 337-4782
315 W. JAMES ST., SUITE 102 LANCASTER, PA • PHONE (717) 481-2991 • FAX (717) 481-8690
WWW.CSDAVIDSON.COM

PIPE BEDDING DETAILS

UPPER ALLEN TWP. CUMBERLAND COUNTY , PENNSYLVANIA

DRAWN BY	CJM
CHECKED BY	
SCALE	N.T.S.
DATE	9/14/16
DWG. NO.	HT02221-1
FILE NO.	3566.9.03.00

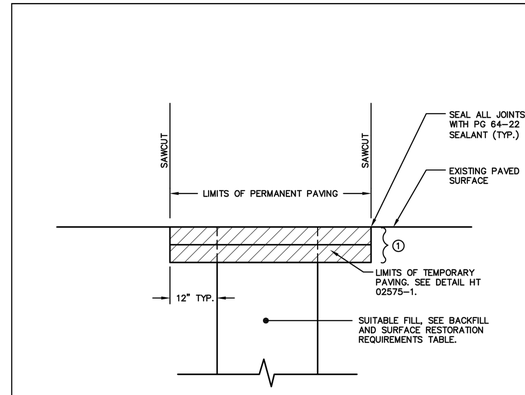

STREET CLASSIFICATION	1
MINOR/COLLECTOR	3" BASE, 2" BINDER 1-1/2" WEARING
MINOR/COLLECTOR (FOR COMMERCIAL AND INDUSTRIAL USE)	5" BASE, 2" BINDER 1-1/2" WEARING
ALLEYS	3" BASE, 1-1/2" WEARING
STATE ROADS	SEE PERMIT

NOTE: EQUIVALENT MARSHALL MIXES MAY BE SUBSTITUTED, WHEN APPROVED BY THE TOWNSHIP.

BASE = SUPERPAVE BASE COURSE, 25MM

BINDER = SUPERPAVE BINDER COURSE, 19MM

WEARING = SUPERPAVE WEARING COURSE, 9.5MM

SUPERPAVE MIXES TO BE AS SPECIFIED ON DRAWINGS.

UPPER ALLEN TOWNSHIP CONSTRUCTION & MATERIAL SPECIFICATIONS

C.S.Davidson, Inc.
Excellence in Civil Engineering
38 N. DUKE STREET YORK, PA • PHONE (717) 846-4805 • FAX (717)846-5811
50 WEST MIDDLE ST. GETTYSBURG, PA • PHONE (717) 337-3025 • FAX (717) 337-4782
315 W. JAMES ST., SUITE 102 LANCASTER, PA • PHONE (717) 481-2991 • FAX (717) 481-8690
WWW.CSDAVIDSON.COM

PERMANENT TRENCH PAVING

UPPER ALLEN TWP. CUMBERLAND COUNTY , PENNSYLVANIA

DRAWN BY	CJM
CHECKED BY	
SCALE	N.T.S.
DATE	9/14/16
DWG. NO.	HT02575-2
FILE NO.	3566.9.03.00

Architecture
Engineering
Environmental
Land Surveying

BL Companies

2601 Market Place
Suite 350
Harrisburg, PA 17110
(717) 943-1665

GENIUS KIDS CHILD DEVELOPMENT CENTER
PLAY. LEARN. GROW

PRELIMINARY/FINAL LAND DEVELOPMENT PLAN

PROPOSED K CARE - UA (GENIUS KIDS)

OLD SCHOOLHOUSE LANE

UPPER ALLEN TOWNSHIP, CUMBERLAND COUNTY, PA

REVISIONS No.	Date	Desc.
1	09/29/2023	PER TOWNSHIP SKETCH PLAN COMMENTS
2	01/04/2024	PER TOWNSHIP PLAN REVIEW COMMENTS
3	01/24/2024	PER TOWNSHIP PLAN REVIEW COMMENTS
4	02/12/2024	PER TOWNSHIP PLAN REVIEW COMMENTS

Designed	C.L.H.
Drawn	N.M.
Reviewed	A.J.B.
Scale	1" = 20'
Project No.	2202027
Date	07/31/23
CAD File:	DN2202027.01

Title

DETAIL SHEET

Sheet No.

DN-4

No.14of 19

© 2024 BL COMPANIES, INC. THESE DRAWINGS SHALL NOT BE UTILIZED BY ANY PERSON, FIRM OR CORPORATION WITHOUT THE SPECIFIC WRITTEN PERMISSION OF BL COMPANIES.

FOR PERMITTING PURPOSES ONLY NOT RELEASED FOR CONSTRUCTION

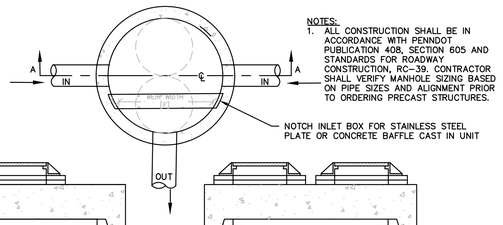

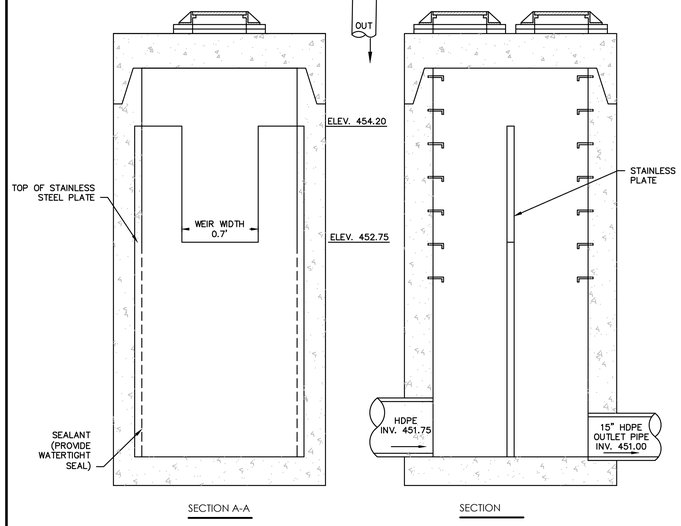

SUBSURFACE INFILTRATION BASIN OUTLET CONTROL STRUCTURE (OCS)

N.T.S

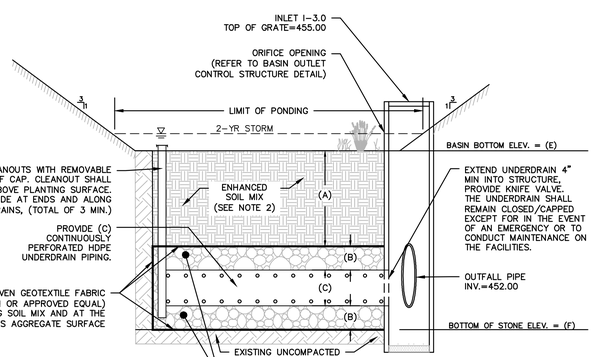

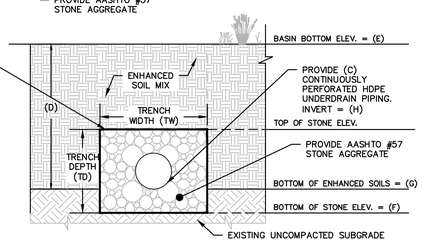

CROSS SECTION AT UNDERDRAIN

NOTES:

1. EXCAVATE BASINS TO SUBGRADE. SCARIFY SUBGRADE A MINIMUM OF 6 INCHES.
2. SPREAD ENHANCED SOIL OVER THE ENTIRETY OF THE BASIN BOTTOM. ENHANCED SOIL MIX.

   THE ENHANCED SOIL LAYER SHALL BE CAPABLE OF SUPPORTING A HEALTHY VEGETATIVE COVER THAT IS FREE OF SUBSOIL, CLAY LUMPS, BRUSH, ROOTS, WEEDS, AND ANY OTHER FOREIGN MATTER.
3. MAINTAIN A MINIMUM DEPTH TO BEDROCK OF 2 FEET, WHERE POSSIBLE. DURING SITE CONSTRUCTION, VIRGIN SOIL SHALL BE PROTECTED FROM COMPACTION DUE TO HEAVY EQUIPMENT OPERATION OR STORAGE OF FILL OR CONSTRUCTION MATERIAL. INFILTRATION AREAS SHALL BE PROTECTED FROM SEDIMENTATION. AREAS THAT ARE ACCIDENTALLY COMPACTED OR GRADED SHALL BE REMEDIATED TO RESTORE SOIL COMPOSITION AND POROSITY. ALL AREAS DESIGNATED FOR INFILTRATION SHALL NOT RECEIVE RUNOFF UNTIL THE CONTRIBUTORY DRAINAGE AREA HAS ACHIEVED TEMPORARY STABILIZATION.
4. WHERE 2 FEET OF EXISTING VIRGIN SOIL CANNOT BE MAINTAINED, UTILIZE ENGINEERED FILL MATERIAL SECTION 1.
5. PLACEMENT OF STONE OVER AND AROUND UNDERDRAIN MUST BE DONE WITH EXTREME CARE AND SHOULD BE SPREAD MANUALLY TO AVOID DAMAGE.

INFILTRATION FACILITY	DEPTH (A)	DEPTH (B)	INSIDE DIA. (C)	DEPTH (D)	ELEV. (E)	ELEV. (F)	ELEV. (G)	ELEV. (H)	TRENCH WIDTH (TW)	TRENCH DEPTH (TD)
BASIN 1	12"	4"	4"	24"	454.00	451.67	452.00	452.00	12"	12"

BIORETENTION BASIN CROSS-SECTION

N.T.S

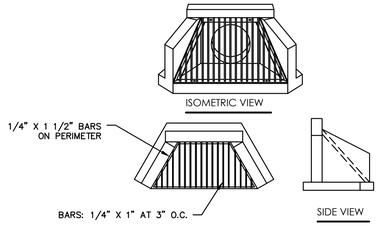

NOTES:

1. TRASH RACK MATERIAL TO BE HOT DIPPED GALVANIZED STEEL.
2. ATTACH TRASH RACK TO HEADWALL WITH 3/8" DIA. S.S. ANCHOR BOLTS.
3. HINGED VERSION AVAILABLE.

TYPE DW ENDWALL WITH TRASHRACK

N.T.S

TABLE A			
PIPE DIAM	L	W	A
18"&<	4.0'	4.0'	12"
24"	4.6'	4.25'	12"
36"	5.8'	4.6'	12"
42"	6.3'	5.8'	12"
48"	6.9'	6.9'	12"
54"	7.5'	8.0'	12"
60"	8.1'	9.2'	15"
72"	9.2'	11.5'	15"

NOTES:
-CONCRETE SHALL BE CLASS "AA"
-EXPOSED EDGES SHALL BE CHAMFERED ONE (1) INCH

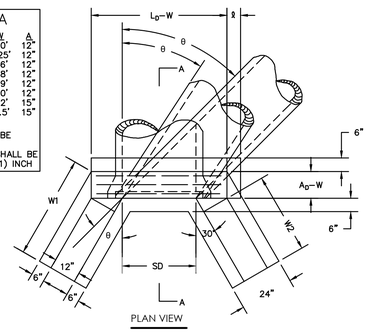

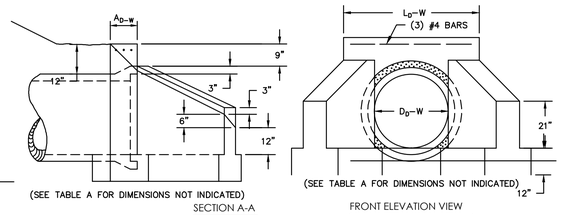

NOTES:

1. ALL ENDWALLS AND HEADWALLS SHALL HAVE A TRASH SCREEN (SEE DETAIL).

TYPE DW ENDWALL

N.T.S

TYPICAL INSTALLATION OF NYLOPLAST DRAIN BASIN AND INLINE DRAIN

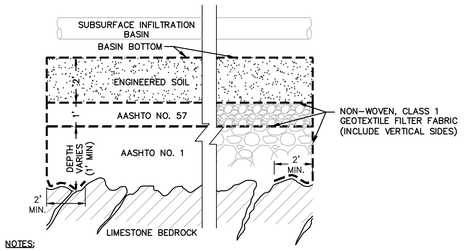

NOTES:

1. SEE SUBSURFACE INFILTRATION BASIN CROSS SECTION FOR WHEN THIS DETAIL SHOULD BE APPLIED.
2. OVER-EXCAVATE A MINIMUM 48 INCHES BELOW THE BASIN BOTTOM. THE INSTALLATION OF THE GEOTEXTILE FABRIC AND THE STONE SHOULD BE COMPLETED UNDER THE DIRECTION OF THE GEOTECHNICAL ENGINEER OF RECORD.
3. THE ENGINEERED SOIL LAYER SHALL BE A LOAM THAT IS FREE OF SUBSOIL, CLAY LUMPS, BRUSH, ROOTS, WEEDS, AND ANY OTHER FOREIGN MATTER MIXED 50/50 WITH SAND. A MAXIMUM CLAY CONTENT OF 10% IS PERMITTED IN THE ENGINEERED FILL MIX. THE SAND SHALL BE ASTM C-33 (OR AASHTO M-6) SIZE (0.02" - 0.04"), CONCRETE SAND, CLEAN, MEDIUM TO FINE SAND.

ENGINEERED FILL MATERIAL SECTION

N.T.S

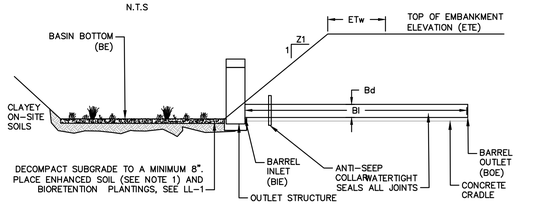

BASIN NO.	Z1 (FT)	BE (FT)	EMBANKMENT		OUTLET BARREL				
			TOP ELEV ETE (FT)	TOP WIDTH ETW (FT)	DIA Bd (IN)	INLET ELEV BIE (FT)	MAT'L	LENGTH BI (FT)	OUTLET ELEV BOE (FT)
1	4	454	456.00	>8	18.0	452.00	HDPE	22	451.75

NOTES:

1. THE ENHANCED SOIL LAYER SHALL BE A MIX OF MAX. 75% TOPSOIL/ MIN. 25% MULCH/ MAX. 10% CLAY.
   - TOPSOIL: THE TOPSOIL SHALL BE A LOAM CAPABLE OF SUPPORTING A HEALTHY VEGETATIVE COVER THAT IS FREE OF SUBSOIL, CLAY LUMPS, BRUSH, ROOTS, WEEDS, AND ANY OTHER FOREIGN MATTER. THE SOIL LAYER SHALL ALSO HAVE A CLAY CONTENT OF LESS THAN 10%
   - MULCH: THE MULCH SHALL BE TRIPLE SHREDDED.
2. MAINTAIN A MINIMUM DEPTH TO BEDROCK OF 2 FEET, WHERE POSSIBLE. DURING SITE CONSTRUCTION, VIRGIN SOIL SHALL BE PROTECTED FROM COMPACTION DUE TO HEAVY EQUIPMENT OPERATION OR STORAGE OF FILL OR CONSTRUCTION MATERIAL. INFILTRATION AREAS SHALL BE PROTECTED FROM SEDIMENTATION. AREAS THAT ARE ACCIDENTALLY COMPACTED OR GRADED SHALL BE REMEDIATED TO RESTORE SOIL COMPOSITION AND POROSITY. ALL AREAS DESIGNATED FOR INFILTRATION SHALL NOT RECEIVE RUNOFF UNTIL THE CONTRIBUTORY DRAINAGE AREA HAS ACHIEVED FINAL STABILIZATION.

BIORETENTION BASIN CROSS SECTION

N.T.S

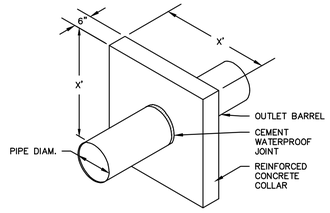

COLLAR DESIGNATION	X (IN)	NO. OF COLLARS	SPACING OF COLLARS	DIST OF COLLAR FROM OUTLET STRUCTURE (FT)
BASIN 1	45	1	N/A	7

NOTES:

1. MIN. CONCRETE COMPRESSIVE STRENGTH = 4,000 P.S.I.
2. REINFORCEMENT SHALL BE 6x6 W4.0xW4.0 OR #3 REBAR SPACED 12" EACH WAY, CENTERED WITHIN COLLAR, 3" MIN. COVER.
3. SEE BASIN EMBANKMENT DETAIL FOR LOCATION.

CONCRETE ANTI-SEEP COLLAR

N.T.S

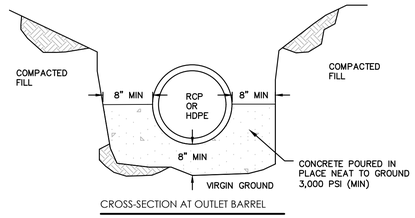

CROSS-SECTION AT OUTLET BARREL

NOTE: A CONCRETE CRADLE MAY BE USED IN CONJUNCTION WITH ANTI-SEEP COLLARS AND/OR FILTER DIAPHRAGM.

ANTI-SEEP COLLAR NUMBER, SIZE AND SPACING SHALL BE AS SHOWN ELSEWHERE IN PLAN.

FILTER DIAPHRAGM LOCATION (LOC.) SHALL BE AS SHOWN IN FIGURE 7.8 FOUND IN PENNSYLVANIA DEP EROSION AND SEDIMENT POLLUTION CONTROL PROGRAM MANUAL.

CONCRETE CRADLE FOR BASIN OR TRAP OUTLET BARREL DETAIL

N.T.S PADEP-7-17

OPERATION & MAINTENANCE PROGRAM FOR BMPs

1. THE PURPOSE OF THESE INSTRUCTIONS IS TO IDENTIFY THE OWNERSHIP AND MAINTENANCE ACTIVITIES ASSOCIATED WITH THE PROPOSED BMPS. THE AFOREMENTIONED FACILITIES SHALL BE THE RESPONSIBILITY OF THE PERMIT APPLICANT (PERMITEE).
2. ALL PCSM BMPS WILL BE INSPECTED ACCORDING TO THE SCHEDULES LISTED BELOW. A WRITTEN REPORT MUST BE COMPLETED DOCUMENTING EACH INSPECTION AND ANY REPAIR, REPLACEMENT OR MAINTENANCE ACTIVITY.
3. SOIL, TRASH, DEBRIS OR OTHER MATERIALS REMOVED FROM PCSM BMPS SHALL BE REMOVED FROM THE SITE AND RECYCLED OR DISPOSED OF IN ACCORDANCE WITH THE DEPARTMENT'S SOLID WASTE MANAGEMENT REGULATIONS AT 25 PA. CODE 260.1 ET SEQ., 271.1, AND 287.1 ET SEQ. NO WASTES, UNUSED BUILDING MATERIALS OR OTHER MATERIALS SHALL BE BURNED, BURIED, DUMPED, OR DISCHARGED AT THE SITE.
4. ALL DAMAGED OR NON-FUNCTIONAL BMPS SHALL BE REPAIRED IMMEDIATELY. ANY PCSM BMPS THAT CANNOT BE REPAIRED MUST BE REPLACED AS SOON AS PRACTICABLE.
5. THE ENTITY CONDUCTING THE INSPECTION SHALL BE REQUIRED TO SUBMIT A REPORT TO THE MUNICIPALITY ANNUALLY BY JUNE 1ST OF EACH YEAR.
6. THE PERMIT APPLICANT SHALL BE RESPONSIBLE FOR THE MAINTENANCE OF PERMANENT STORMWATER FACILITIES LOCATED ON THE SUBJECT PROPERTY. PERMANENT MAINTENANCE OF THE STORM SYSTEM AFTER ACCEPTANCE WILL PRIMARILY CONSIST OF ROUTINE CLEANING OF ACCUMULATED SEDIMENT AND DEBRIS BY FACILITY STAFF OR PRIVATE CONTRACTORS. THE SPECIFIC MAINTENANCE STEPS AND SCHEDULE ARE AS FOLLOWS:

ADS SUBSURFACE BASIN INSPECTION & MAINTENANCE

STEP 1) INSPECT ISOLATOR ROW PLUS FOR SEDIMENT
- A. INSPECTION PORTS (IF PRESENT)
  - A.1. REMOVE/OPEN LID ON NYLOPLAST INLINE DRAIN
  - A.2. REMOVE AND CLEAN FLEXSTORM FILTER IF INSTALLED
  - A.3. USING A FLASHLIGHT AND STADIA ROD, MEASURE DEPTH OF SEDIMENT AND RECORD ON MAINTENANCE LOG
  - A.4. LOWER A CAMERA INTO ISOLATOR ROW PLUS FOR VISUAL INSPECTION OF SEDIMENT LEVELS (OPTIONAL)
  - A.5. IF SEDIMENT IS AT, OR ABOVE, 3" (80 mm) PROCEED TO STEP 2. IF NOT, PROCEED TO STEP 3.
- B. ALL ISOLATOR PLUS ROWS
  - B.1. REMOVE COVER FROM STRUCTURE AT UPSTREAM END OF ISOLATOR ROW PLUS
  - B.2. USING A FLASHLIGHT, INSPECT DOWN THE ISOLATOR ROW PLUS THROUGH OUTLET PIPE
    - i) MIRRORS ON POLES OR CAMERAS MAY BE USED TO AVOID A CONFINED SPACE ENTRY
    - ii) FOLLOW OSHA REGULATIONS FOR CONFINED SPACE ENTRY IF ENTERING MANHOLE
  - B.3. IF SEDIMENT IS AT, OR ABOVE, 3" (80 mm) PROCEED TO STEP 2. IF NOT, PROCEED TO STEP 3.

STEP 2) CLEAN OUT ISOLATOR ROW PLUS USING THE JETVAC PROCESS
- A. A FIXED CULVERT CLEANING NOZZLE WITH REAR FACING SPREAD OF 45° (1.1 m) OR MORE IS PREFERRED
- B. APPLY MULTIPLE PASSES OF JETVAC UNTIL BACKFLUSH WATER IS CLEAN
- C. VACUUM STRUCTURE SUMP AS REQUIRED

STEP 3) REPLACE ALL COVERS, GRATES, FILTERS, AND LIDS; RECORD OBSERVATIONS AND ACTIONS.

STEP 4) INSPECT AND CLEAN BASINS AND MANHOLES UPSTREAM OF THE STORMTECH SYSTEM.

NOTES

1. INSPECT EVERY 6 MONTHS DURING THE FIRST YEAR OF OPERATION. ADJUST THE INSPECTION INTERVAL BASED ON PREVIOUS OBSERVATIONS OF SEDIMENT ACCUMULATION AND HIGH WATER ELEVATIONS.
2. CONDUCT JETTING AND VACTORING ANNUALLY OR WHEN INSPECTION SHOWS THAT MAINTENANCE IS NECESSARY.

SUBSURFACE INFILTRATION BASIN	
OPERATION & MAINTENANCE PROCEDURES	
ACTIVITY	SCHEDULE
ALL INLETS AND MANHOLES CONTRIBUTING TO THE SUBSURFACE FACILITY SHOULD BE VISUALLY INSPECTED FOR TRASH AND DEBRIS. IF TRASH OR DEBRIS IS FOUND, REMOVE FROM SYSTEM AND DISPOSE OF IN ACCORDANCE WITH ALL APPLICABLE STATE AND FEDERAL REGULATIONS. VACTOR TRUCKS OR SIMILAR EQUIPMENT MAY BE NECESSARY TO ENSURE ALL TRASH AND DEBRIS IS REMOVED FROM THE INLETS, MANHOLES AND/OR SUBSURFACE INFILTRATION FACILITY.	MONTHLY
THE SUBSURFACE SYSTEM SHALL BE VISUALLY INSPECTED VIA THE FACILITY'S MANHOLES FOR EVIDENCE OF STANDING WATER (LONGER THAN 72-HOURS AFTER A 2-YEAR 24-HOUR, 2.90 INCH, OR GREATER RAINFALL EVENT). IF STANDING WATER IS OBSERVED, THE OWNER SHALL CONTACT A LICENSED PROFESSIONAL ENGINEER TO PREPARE A CORRECTIVE ACTION PLAN. THE OWNER AND LICENSED PROFESSIONAL ENGINEER WILL BE RESPONSIBLE FOR SECURING ANY REQUIRED PERMIT MODIFICATIONS FROM CCCD AND PADEP PRIOR TO REMEDIATION.	AS NEEDED AND TWICE PER YEAR
VISUALLY INSPECT THE SUBSURFACE SYSTEM VIA THE FACILITY'S MANHOLES FOR SALT OR OTHER CORROSIVE SUBSTANCE ACCUMULATIONS WITHIN THE SYSTEM. IF EVIDENCE IS FOUND, RINSE THE SYSTEM BY USE OF WATER AND VACTOR TRUCKS TO FLUSH OUT AND REMOVE ANY DEBRIS/POLLUTANTS FOUND IN THE SYSTEM. ALL DEBRIS/POLLUTANTS THAT ARE REMOVED FROM THE SYSTEM DURING FLUSHING SHALL BE DISPOSED OF IN ACCORDANCE WITH ALL APPLICABLE STATE AND FEDERAL REGULATIONS.	ONCE PER YEAR IN LATE SPRING AFTER FINAL SNOW-MELT

BIORETENTION FACILITY / RAIN GARDEN	
OPERATION & MAINTENANCE PROCEDURES	
ACTIVITY	SCHEDULE
DECOMPACT THE BASIN BOTTOM TO A DEPTH OF 8". SEED WITH PLANTING MIX SHOWN ON APPROVED PLANS. QUALIFIED PROFESSIONAL OR THEIR DESIGNEE SHALL ENSURE THAT DESIGN INFILTRATION RATE IS BEING ACHIEVED. BASIN 1: 0.25 TO 10.00 IN/HR	AT CONSTRUCTION OF PERMANENT INFILTRATION FACILITY
FIRST GROWING SEASON: WHENEVER VEGETATION REACHES A HEIGHT OF 18-24", TRIM TO A HEIGHT OF 8". HAND PULL UNWANTED VEGETATION AND INVASIVE SPECIES. SECOND GROWING SEASON: PRIOR TO NEW SPRING GROWTH REACHING A HEIGHT OF 2", TRIM ALL VEGETATION DOWN TO 4". HAND PULL UNWANTED VEGETATION AND INVASIVE SPECIES.	FIRST AND SECOND GROWING SEASONS, AND AS NEEDED
REMOVE LITTER AND DEBRIS. INSPECT FOR SEDIMENT BUILDUP, EROSION, AND VEGETATIVE CONDITIONS. STABILIZE ERODED BANKS, REPAIR UNDERCUT AND ERODED AREAS AT INFLOW AND OUTFLOW STRUCTURES, AND RESEED AS NECESSARY TO ENSURE STABILIZATION. CONTACT QUALIFIED PROFESSIONAL IF SIGNIFICANT SEDIMENT BUILDUP (I.E. POND VOLUME HAS BEEN REDUCED BY 10%) OR EROSION HAS OCCURRED.	MONTHLY
INSPECT FACILITY FOR SIGNS OF WETNESS OR DAMAGE TO STRUCTURES. NOTE ERODED AREAS. IF DEAD OR DYING GRASS ON THE BOTTOM IS OBSERVED, CHECK TO ENSURE THAT WATER IS PERCOLATING WITHIN THE DESIGN DEWATERING TIME (SEE BELOW).	TWICE PER YEAR
IF AFTER A 2-YEAR STORM EVENT, WATER HAS NOT INFILTRATED WITHIN THE DESIGN DEWATERING TIME (SEE BELOW), WAIT UNTIL AFTER THE NEXT 2-YEAR STORM EVENT TO SEE IF DESIGN DEWATERING TIME HAS BEEN ACHIEVED. IF THE BASIN IS STILL NOT DEWATERING APPROPRIATELY, CONTACT A QUALIFIED PROFESSIONAL TO EVALUATE THE BMP AND IMMEDIATELY CORRECT THE DETERMINED MALFUNCTION TO ACHIEVE DEWATERING TIMES AS FOLLOWS: BASIN 1: 24 - 72 HOURS	TWICE PER YEAR FOR FIRST THREE YEARS
1. VEGETATION ALONG THE SURFACE OF THE BASIN BOTTOM SHOULD BE MAINTAINED IN GOOD CONDITION, AND ANY BARE SPOTS REVEGETATED AS SOON AS POSSIBLE. 2. VEGETATIVE COVER SHALL BE MAINTAINED AT A MINIMUM OF 95%. 3. VEHICLES SHOULD NOT BE PARKED OR DRIVEN ON BASIN BOTTOM. AVOID COMPACTION. 4. DURING PERIODS OF EXTENDED DROUGHT, INFILTRATION AREA MAY REQUIRE WATERING.	

STORMWATER COLLECTION/CONVEYANCE	
OPERATION & MAINTENANCE PROCEDURES	
ACTIVITY	SCHEDULE
INLETS & CATCH BASINS SHOULD BE CLEANED OF DEBRIS. REPAIRS SHOULD BE MADE AS SOON AS PROBLEMS ARISE.	CLEAN ONCE PER YEAR & REPAIR AS NEEDED
INSPECT OUTFALL STRUCTURES QUARTERLY DURING 1ST YEAR & ONCE PER YEAR THEREAFTER	QUARTERLY & ONCE PER YEAR
COLLECTION/CONVEYANCE SYSTEMS SHOULD BE INSPECTED FOR DEBRIS, TRASH, AND SEDIMENT ACCUMULATION TWICE PER YEAR MINIMUM AND AFTER STORM EVENTS OF 1" OR GREATER.	TWICE PER YEAR & AFTER 1" STORMS OR GREATER
GENERAL MAINTENANCE NOTES: 1. VACTOR TRUCKS MAY BE AN EFFICIENT CLEANING MECHANISM. 2. CATCH BASINS SHOULD BE CLEANED BEFORE HALF FULL.	

Architecture
Engineering
Environmental
Land Surveying
BL Companies
2601 Market Place
Suite 350
Harrisburg, PA 17110
(717) 943-1665

GENIUS KIDS CHILD DEVELOPMENT CENTER PLAY. LEARN. GROW.

PRELIMINARY/FINAL LAND DEVELOPMENT PLAN

PROPOSED K CARE - UA (GENIUS KIDS)

OLD SCHOOLHOUSE LANE

UPPER ALLEN TOWNSHIP, CUMBERLAND COUNTY, PA

REVISIONS

No.	Date	Desc.
1	09/29/2023	PER TOWNSHIP SKETCH PLAN COMMENTS
2	01/04/2024	PER TOWNSHIP PLAN REVIEW COMMENTS
3	01/24/2024	PER TOWNSHIP PLAN REVIEW COMMENTS
4	02/12/2024	PER TOWNSHIP PLAN REVIEW COMMENTS

Designed	C.L.H.
Drawn	N.M.
Reviewed	A.J.B.
Scale	1" = 20'
Project No.	2202027
Date	07/31/23
CAD File:	DN220202701

Title

DETAIL SHEET

Sheet No.

DN-5

No.15of 19

2/12/2024, C:\CIVIL\2022\2202027\DWG\DN220202701 (DW).DWG, DN-5

© 2024 BL COMPANIES, INC. THESE DRAWINGS SHALL NOT BE UTILIZED BY ANY PERSON, FIRM OR CORPORATION WITHOUT THE SPECIFIC WRITTEN PERMISSION OF BL COMPANIES.

FOR PERMITTING PURPOSES ONLY NOT RELEASED FOR CONSTRUCTION

PROJECT INFORMATION	
ENGINEERED PRODUCT MANAGER	KIEL FORTNER 484-602-7199 KIEL.FORTNER@ADSPIPE.COM
ADS SALES REP	VINCENT O'BRIEN 717-475-9421 VINCENT.OBRIEN@ADS-PIPE.COM
PROJECT NO.	53954/05

ADS Advanced Drainage Systems, Inc.

ADS SiteAssist® FOR STORMTECH INSTALLATION INSTRUCTIONS VISIT OUR APP

GENIUS KIDS K CARE, UPPER ALLEN TWP

MECHANICSBURG, PA, USA

DC-780 STORMTECH CHAMBER SPECIFICATIONS

1. CHAMBERS SHALL BE STORMTECH DC-780.
2. CHAMBERS SHALL BE ARCH-SHAPED AND SHALL BE MANUFACTURED FROM VIRGIN, IMPACT-MODIFIED POLYPROPYLENE COPOLYMERS.
3. CHAMBERS SHALL MEET THE REQUIREMENTS OF ASTM F2418, "STANDARD SPECIFICATION FOR POLYPROPYLENE (PP) CORRUGATED WALL STORMWATER COLLECTION CHAMBERS".
4. CHAMBER ROWS SHALL PROVIDE CONTINUOUS, UNOBSTRUCTED INTERNAL SPACE WITH NO INTERNAL SUPPORTS THAT WOULD IMPEDE FLOW OR LIMIT ACCESS FOR INSPECTION.
5. THE STRUCTURAL DESIGN OF THE CHAMBERS, THE STRUCTURAL BACKFILL, AND THE INSTALLATION REQUIREMENTS SHALL ENSURE THAT THE LOAD FACTORS SPECIFIED IN THE AASHTO LRFD BRIDGE DESIGN SPECIFICATIONS, SECTION 12.12, ARE MET FOR: 1) LONG-DURATION DEAD LOADS AND 2) SHORT-DURATION LIVE LOADS, BASED ON THE AASHTO DESIGN TRUCK WITH CONSIDERATION FOR IMPACT AND MULTIPLE VEHICLE PRESENCES.
6. CHAMBERS SHALL BE DESIGNED, TESTED AND ALLOWABLE LOAD CONFIGURATIONS DETERMINED IN ACCORDANCE WITH ASTM F2787, "STANDARD PRACTICE FOR STRUCTURAL DESIGN OF THERMOPLASTIC CORRUGATED WALL STORMWATER COLLECTION CHAMBERS". LOAD CONFIGURATIONS SHALL INCLUDE: 1) INSTANTANEOUS (+1 MIN) AASHTO DESIGN TRUCK-LIVE LOAD ON MINIMUM COVER 2) MAXIMUM PERMANENT (75-YR) COVER LOAD AND 3) ALLOWABLE COVER WITH PARKED (1-WEEK) AASHTO DESIGN TRUCK.
7. REQUIREMENTS FOR HANDLING AND INSTALLATION:
   - TO MAINTAIN THE WIDTH OF CHAMBERS DURING SHIPPING AND HANDLING, CHAMBERS SHALL HAVE INTEGRAL, INTERLOCKING STACKING LUGS.
   - TO ENSURE A SECURE JOINT DURING INSTALLATION AND BACKFILL, THE HEIGHT OF THE CHAMBER JOINT SHALL NOT BE LESS THAN 2".
   - TO ENSURE THE INTEGRITY OF THE ARCH SHAPE DURING INSTALLATION, a) THE ARCH STIFFNESS CONSTANT SHALL BE GREATER THAN OR EQUAL TO 550 LBS/FT/%. THE ASC IS DEFINED IN SECTION 6.2.8 OF ASTM F2418, AND b) TO RESIST CHAMBER DEFORMATION DURING INSTALLATION AT ELEVATED TEMPERATURES (ABOVE 73° F / 23° C), CHAMBERS SHALL BE PRODUCED FROM REFLECTIVE GOLD OR YELLOW COLORS.
8. ONLY CHAMBERS THAT ARE APPROVED BY THE SITE DESIGN ENGINEER WILL BE ALLOWED. UPON REQUEST BY THE SITE DESIGN ENGINEER OR OWNER, THE CHAMBER MANUFACTURER SHALL SUBMIT A STRUCTURAL EVALUATION FOR APPROVAL BEFORE DELIVERING CHAMBERS TO THE PROJECT SITE AS FOLLOWS:
   - THE STRUCTURAL EVALUATION SHALL BE SEALED BY A REGISTERED PROFESSIONAL ENGINEER.
   - A MINIMUM FACTOR OF SAFETY OF 1.95 SHALL BE USED WHEN LOAD FACTORS ARE GREATER THAN OR EQUAL TO 1.95 FOR DEAD LOAD AND 1.75 FOR LIVE LOAD, THE MINIMUM REQUIRED BY ASTM F2787 AND BY SECTIONS 3 AND 12.12 OF THE AASHTO LRFD BRIDGE DESIGN SPECIFICATIONS FOR THERMOPLASTIC PIPE.
   - THE TEST DERIVED CREEP MODULUS AS SPECIFIED IN ASTM F2418 SHALL BE USED FOR PERMANENT DEAD LOAD DESIGN EXCEPT THAT IT SHALL BE THE 75-YEAR MODULUS USED FOR DESIGN.
9. CHAMBERS AND END CAPS SHALL BE PRODUCED AT AN ISO 9001 CERTIFIED MANUFACTURING FACILITY.

IMPORTANT - NOTES FOR THE BIDDING AND INSTALLATION OF THE DC-780 CHAMBER SYSTEM

1. STORMTECH DC-780 CHAMBERS SHALL NOT BE INSTALLED UNTIL THE MANUFACTURER'S REPRESENTATIVE HAS COMPLETED A PRE-CONSTRUCTION MEETING WITH THE INSTALLERS.
2. STORMTECH DC-780 CHAMBERS SHALL BE INSTALLED IN ACCORDANCE WITH THE "STORMTECH SC-310/SC-740/DC-780 CONSTRUCTION GUIDE".
3. CHAMBERS ARE NOT TO BE BACKFILLED WITH A DOZER OR AN EXCAVATOR SITUATED OVER THE CHAMBERS. STORMTECH RECOMMENDS 3 BACKFILL METHODS:
   - STONE/AGGREGATE LOCATED OFF THE CHAMBER BED.
   - BACKFILL AS ROWS ARE BUILT, USING AN EXCAVATOR ON THE FOUNDATION STONE OR SUBGRADE.
   - BACKFILL FROM OUTSIDE THE EXCAVATION USING A LONG BOOM HOE OR EXCAVATOR.
4. THE FOUNDATION STONE SHALL BE LEVELED AND COMPACTED PRIOR TO PLACING CHAMBERS.
5. JOINTS BETWEEN CHAMBERS SHALL BE PROPERLY SEATED PRIOR TO PLACING STONE.
6. MAINTAIN MINIMUM -6" (150 mm) SPACING BETWEEN THE CHAMBER ROWS.
7. EMBEDMENT STONE SURROUNDING CHAMBERS MUST BE A CLEAN, CRUSHED, ANGULAR STONE 3/4-2" (20-50 mm).
8. THE CONTRACTOR MUST REPORT ANY DISCREPANCIES WITH CHAMBER FOUNDATION MATERIALS BEARING CAPACITIES TO THE SITE DESIGN ENGINEER.
9. ADS RECOMMENDS THE USE OF "FLEXSTORM CATCH IT" INSERTS DURING CONSTRUCTION FOR ALL INLETS TO PROTECT THE SUBSURFACE STORMWATER MANAGEMENT SYSTEM FROM CONSTRUCTION SITE RUNOFF.

NOTES FOR CONSTRUCTION EQUIPMENT

1. STORMTECH DC-780 CHAMBERS SHALL BE INSTALLED IN ACCORDANCE WITH THE "STORMTECH SC-310/SC-740/DC-780 CONSTRUCTION GUIDE".
2. THE USE OF CONSTRUCTION EQUIPMENT OVER DC-780 CHAMBERS IS LIMITED:
   - NO EQUIPMENT IS ALLOWED ON BARE CHAMBERS.
   - NO RUBBER TIRED LOADERS, DUMP TRUCKS, OR EXCAVATORS ARE ALLOWED UNTIL PROPER FILL DEPTHS ARE REACHED IN ACCORDANCE WITH THE "STORMTECH SC-310/SC-740/DC-780 CONSTRUCTION GUIDE".
   - WEIGHT LIMITS FOR CONSTRUCTION EQUIPMENT CAN BE FOUND IN THE "STORMTECH SC-310/SC-740/DC-780 CONSTRUCTION GUIDE".
3. FULL 36" (900 mm) OF STABILIZED COVER MATERIALS OVER THE CHAMBERS IS REQUIRED FOR DUMP TRUCK TRAVEL OR DUMPING.

USE OF A DOZER TO PUSH EMBEDMENT STONE BETWEEN THE ROWS OF CHAMBERS MAY CAUSE DAMAGE TO THE CHAMBERS AND IS NOT AN ACCEPTABLE BACKFILL METHOD. ANY CHAMBERS DAMAGED BY THE "DUMP AND PUSH" METHOD ARE NOT COVERED UNDER THE STORMTECH STANDARD WARRANTY.

CONTACT STORMTECH AT 1-888-892-2694 WITH ANY QUESTIONS ON INSTALLATION REQUIREMENTS OR WEIGHT LIMITS FOR CONSTRUCTION EQUIPMENT.

PROPOSED LAYOUT	
88	STORMTECH DC-780 CHAMBERS
22	STORMTECH DC-780 END CAPS
6	STONE ABOVE (in)
9	STONE BELOW (in)
42	STONE VOID
8092	INSTALLED SYSTEM VOLUME (CF) (PERIMETER STONE INCLUDED) (COVER STONE INCLUDED) (BASE STONE INCLUDED)
3768	SYSTEM AREA (SF)
268	SYSTEM PERIMETER (ft)

PROPOSED ELEVATIONS:	
MAXIMUM ALLOWABLE GRADE (TOP OF PAVEMENT/UNPAVED)	466.20
MINIMUM ALLOWABLE GRADE (UNPAVED WITH TRAFFIC)	466.20
MINIMUM ALLOWABLE GRADE (UNPAVED NO TRAFFIC)	465.70
MINIMUM ALLOWABLE GRADE (TOP OF RIGID CONCRETE PAVEMENT)	465.70
MINIMUM ALLOWABLE GRADE (BASE OF FLEXIBLE PAVEMENT)	464.70
TOP OF STONE:	464.70
TOP OF DC-780 CHAMBER:	464.20
12" x 12" TOP MANIFOLD INVERT:	462.50
18" x 18" TOP MANIFOLD INVERT:	462.17
18" BOTTOM CONNECTION INVERT:	461.83
24" BOTTOM MANIFOLD INVERT:	461.50
BOTTOM OF CHAMBER:	461.70
FOUNDATION INVERT:	461.00
BOTTOM OF STONE:	461.00

*INVERT ABOVE BASE OF CHAMBER:

PART TYPE	ITEM ON LAYOUT	DESCRIPTION	INVERT*	MAX FLOW
PREFABRICATED EZ END CAP	A	24" BOTTOM PREFABRICATED EZ END CAP, PART#: SC740ECEZ / TYP OF ALL 24" BOTTOM CONNECTIONS AND ISOLATOR R-LIS ROWS	0.10"	
PREFABRICATED END CAP	B	18" BOTTOM PREFABRICATED END CAP, PART#: SC740EPE18B / TYP OF ALL 18" BOTTOM CONNECTIONS	1.60"	
	C	INSTALL FLAMP ON 24" ACCESS PIPE / PART#: SC74024RAMP (TYP 4 PLACES)		
MANIFOLD	D	18" x 18" TOP MANIFOLD, ADS N-12	5.00"	
MANIFOLD	E	12" x 12" TOP MANIFOLD, ADS N-12	12.80"	
MISC CONCRETE STRUCTURE	F	DOG DRAIN (BY ENGINEER/PROVIDED BY OTHERS)		8.0 CFS OUT
MISC CONCRETE STRUCTURE	H	DESIGN BY ENGINEER / PROVIDED BY OTHERS)		1.3 CFS IN
NYLOPLAST (INLET W/ BSD (PLUS ROW)	I	36" DIAMETER (24.00" SUMP MIN)		12.6 CFS IN
NYLOPLAST (INLET)	J	30" DIAMETER (24.00" SUMP MIN)		
UNDERDRAIN	K	6" ADS N-12 DUAL WALL PERFORATED HDPE UNDERDRAIN		
INSPECTION PORT	L	6" SEE DETAIL (TYP 3 PLACES)		
CONNECTION	M	18" BOTTOM CONNECTION, ADS N-12	1.60"	2.8 CFS IN
MANIFOLD	N	18" x 18" TOP MANIFOLD, ADS N-12	5.00"	4.2 CFS IN
MANIFOLD	O	18" x 18" TOP MANIFOLD, ADS N-12	5.00"	2.8 CFS IN

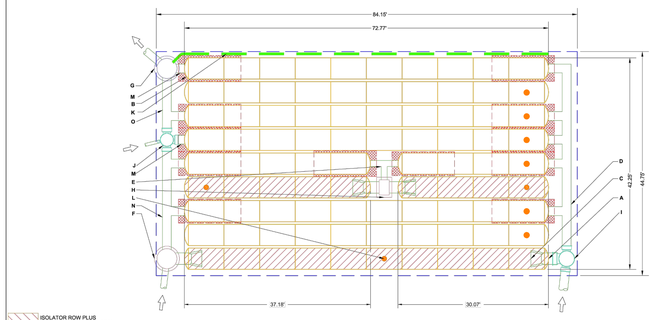

ISOLATOR ROW PLUS (SEE DETAIL/TYP 3 PLACES)

PLACE MINIMUM 12.50' OF ADSPLUS125 WOVEN GEOTEXTILE OVER BEDDING STONE AND UNDERNEATH CHAMBER FEET FOR SCOUR PROTECTION AT ALL CHAMBER INLET ROWS

BED LIMITS

NOTES

1. MANIFOLD SIZE TO BE DETERMINED BY SITE DESIGN ENGINEER. SEE TECH NOTE #6.32 FOR MANIFOLD SIZING GUIDANCE.
2. DUE TO THE ADAPTATION OF THIS CHAMBER SYSTEM TO SPECIFIC SITE AND DESIGN CONSTRAINTS, IT MAY BE NECESSARY TO CUT AND COUPLE ADDITIONAL PIPE TO STANDARD MANIFOLD COMPONENTS.
3. THIS CHAMBER SYSTEM WAS DESIGNED WITHOUT SITE-SPECIFIC INFORMATION ON SOIL CONDITIONS OR BEARING CAPACITY. THE SITE DESIGN ENGINEER IS RESPONSIBLE FOR DETERMINING THE SUITABILITY OF THE SOIL AND PROVIDING THE BEARING CAPACITY OF THE INSITU SOILS. THE BASE STONE DEPTH MAY BE INCREASED OR DECREASED ONCE THIS INFORMATION IS PROVIDED.

SHEET 2 OF 6

ACCEPTABLE FILL MATERIALS: STORMTECH DC-780 CHAMBER SYSTEMS

	MATERIAL LOCATION	DESCRIPTION	AASHTO MATERIAL CLASSIFICATIONS	COMPACTION / DENSITY REQUIREMENT
D	**FINAL FILL:** FILL MATERIAL FOR LAYER 'D' STARTS FROM THE TOP OF THE 'C' LAYER TO THE BOTTOM OF FLEXIBLE PAVEMENT OR UNPAVED FINISHED GRADE ABOVE. NOTE THAT PAVEMENT SUBBASE MAY BE PART OF THE 'D' LAYER	ANY SOIL/ROCK MATERIALS, NATIVE SOILS, OR PER ENGINEER'S PLANS. CHECK PLANS FOR PAVEMENT SUBGRADE REQUIREMENTS.	N/A	PREPARE PER SITE DESIGN ENGINEER'S PLANS. PAVED INSTALLATIONS MAY HAVE STRINGENT MATERIAL AND PREPARATION REQUIREMENTS.
C	**INITIAL FILL:** FILL MATERIAL FOR LAYER 'C' STARTS FROM THE TOP OF THE EMBEDMENT STONE ('B' LAYER) TO 18" (450 mm) ABOVE THE TOP OF THE CHAMBER. NOTE THAT PAVEMENT SUBBASE MAY BE A PART OF THE 'C' LAYER.	GRANULAR WELL-GRADED SOIL/AGGREGATE MIXTURES, <35% FINES OR PROCESSED AGGREGATE. MOST PAVEMENT SUBBASE MATERIALS CAN BE USED IN LIEU OF THIS LAYER.	AASHTO M145* A-1, A-2-4, A-3 OR AASHTO M43* 3, 357, 4, 467, 5, 56, 57, 6, 67, 68, 7, 78, 8, 89, 9, 10	BEGIN COMPACTIONS AFTER 12" (300 mm) OF MATERIAL OVER THE CHAMBERS IS REACHED. COMPACT ADDITIONAL LAYERS IN 6" (150 mm) MAX LIFTS TO A MIN. 95% PROCTOR DENSITY FOR WELL GRADED MATERIAL AND 95% RELATIVE DENSITY FOR PROCESSED AGGREGATE MATERIALS. ROLLER GROSS VEHICLE WEIGHT NOT TO EXCEED 12,000 lbs (53 kN). DYNAMIC FORCE NOT TO EXCEED 20,000 lbs (89 kN).
B	**EMBEDMENT STONE:** FILL SURROUNDING THE CHAMBERS FROM THE FOUNDATION STONE ('A' LAYER) TO THE 'C' LAYER ABOVE.	CLEAN, CRUSHED, ANGULAR STONE	AASHTO M43* 3, 357, 4, 467, 5, 56, 57	NO COMPACTION REQUIRED.
A	**FOUNDATION STONE:** FILL BELOW CHAMBERS FROM THE SUBGRADE UP TO THE FOOT (BOTTOM) OF THE CHAMBER.	CLEAN, CRUSHED, ANGULAR STONE	AASHTO M43* 3, 357, 4, 467, 5, 56, 57	PLATE COMPACT OR ROLL TO ACHIEVE A FLAT SURFACE.[2,3]

PLEASE NOTE:
1. THE LISTED AASHTO DESIGNATIONS ARE FOR GRADATIONS ONLY. THE STONE MUST ALSO BE CLEAN, CRUSHED, ANGULAR. FOR EXAMPLE, A SPECIFICATION FOR #4 STONE WOULD STATE: "CLEAN, CRUSHED, ANGULAR NO. 4 (AASHTO M43) STONE".
2. STORMTECH COMPACTION REQUIREMENTS ARE MET FOR 'A' LOCATION MATERIALS WHEN PLACED AND COMPACTED IN 9" (230 mm) (MAX) LIFTS USING TWO FULL COVERAGES WITH A VIBRATORY COMPACTOR.
3. WHERE INFILTRATION SURFACES MAY BE COMPROMISED BY COMPACTION, FOR STANDARD DESIGN LOAD CONDITIONS, A FLAT SURFACE MAY BE ACHIEVED BY RAKING OR DRAGGING WITHOUT COMPACTION EQUIPMENT. FOR SPECIAL LOAD DESIGNS, CONTACT STORMTECH FOR COMPACTION REQUIREMENTS.
4. ONCE LAYER 'C' IS PLACED, ANY SOIL/MATERIAL CAN BE PLACED IN LAYER 'D' UP TO THE FINISHED GRADE. MOST PAVEMENT SUBBASE SOILS CAN BE USED TO REPLACE THE MATERIAL REQUIREMENTS OF LAYER 'C' OR 'D' AT THE SITE DESIGN ENGINEER'S DISCRETION.

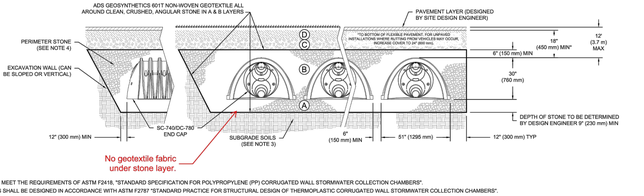

NOTES:

1. CHAMBERS SHALL MEET THE REQUIREMENTS OF ASTM F2418, "STANDARD SPECIFICATION FOR POLYPROPYLENE (PP) CORRUGATED WALL STORMWATER COLLECTION CHAMBERS".
2. DC-780 CHAMBERS SHALL BE DESIGNED IN ACCORDANCE WITH ASTM F2787 "STANDARD PRACTICE FOR STRUCTURAL DESIGN OF THERMOPLASTIC CORRUGATED WALL STORMWATER COLLECTION CHAMBERS".
3. THE SITE DESIGN ENGINEER IS RESPONSIBLE FOR ASSESSING THE BEARING RESISTANCE (ALLOWABLE BEARING CAPACITY) OF THE SUBGRADE SOILS AND THE DEPTH OF FOUNDATION STONE WITH CONSIDERATION FOR THE RANGE OF EXPECTED SOIL MOISTURE CONDITIONS.
4. PERIMETER STONE MUST BE EXTENDED HORIZONTALLY TO THE EXCAVATION WALL FOR BOTH VERTICAL AND SLOPED EXCAVATION WALLS.
5. REQUIREMENTS FOR HANDLING AND INSTALLATION:
   - TO MAINTAIN THE WIDTH OF CHAMBERS DURING SHIPPING AND HANDLING, CHAMBERS SHALL HAVE INTEGRAL, INTERLOCKING STACKING LUGS.
   - TO ENSURE A SECURE JOINT DURING INSTALLATION AND BACKFILL, THE HEIGHT OF THE CHAMBER JOINT SHALL NOT BE LESS THAN 2".
   - TO ENSURE THE INTEGRITY OF THE ARCH SHAPE DURING INSTALLATION, a) THE ARCH STIFFNESS CONSTANT SHALL BE GREATER THAN OR EQUAL TO 550 LBS/FT/%. THE ASC IS DEFINED IN SECTION 6.2.8 OF ASTM F2418, AND b) TO RESIST CHAMBER DEFORMATION DURING INSTALLATION AT ELEVATED TEMPERATURES (ABOVE 73° F / 23° C), CHAMBERS SHALL BE PRODUCED FROM REFLECTIVE GOLD OR YELLOW COLORS.

SHEET 3 OF 6

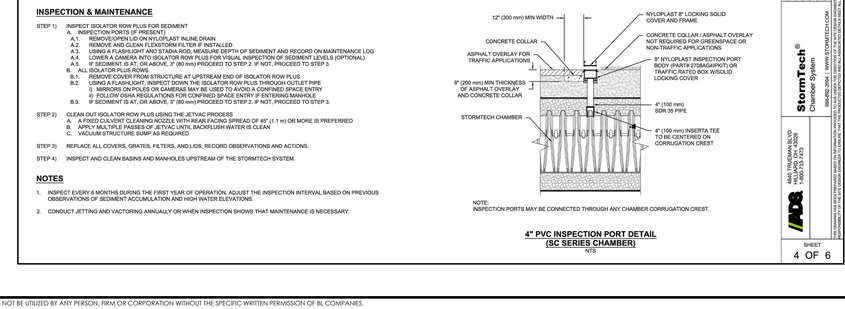

DC-780 ISOLATOR ROW PLUS DETAIL
NTS

INSPECTION & MAINTENANCE

STEP 1) INSPECT ISOLATOR ROW PLUS FOR SEDIMENT
- A. INSPECTION PORTS (IF PRESENT)
  - A.1. REMOVE/OPEN LID ON NYLOPLAST INLINE DRAIN
  - A.2. REMOVE AND CLEAN FLEXSTORM FILTER IF INSTALLED
  - A.3. USING A FLASHLIGHT AND STADIA ROD, MEASURE DEPTH OF SEDIMENT AND RECORD ON MAINTENANCE LOG
  - A.4. LOWER A CAMERA INTO ISOLATOR ROW PLUS FOR VISUAL INSPECTION OF SEDIMENT LEVELS (OPTIONAL)
  - A.5. IF SEDIMENT IS AT, OR ABOVE, 3" (80 mm) PROCEED TO STEP 2. IF NOT, PROCEED TO STEP 3.
- B. ALL ISOLATOR PLUS ROWS
  - B.1. REMOVE COVER FROM STRUCTURE AT UPSTREAM END OF ISOLATOR ROW PLUS
  - B.2. USING A FLASHLIGHT, INSPECT DOWN THE ISOLATOR ROW PLUS THROUGH OUTLET PIPE
    - i) MIRRORS ON POLES OR CAMERAS MAY BE USED TO AVOID A CONFINED SPACE ENTRY
    - ii) FOLLOW OSHA REGULATIONS FOR CONFINED SPACE ENTRY IF ENTERING MANHOLE
  - B.3. IF SEDIMENT IS AT, OR ABOVE, 3" (80 mm) PROCEED TO STEP 2. IF NOT, PROCEED TO STEP 3.

STEP 2) CLEAN OUT ISOLATOR ROW PLUS USING THE JETVAC PROCESS
- A. A FIXED CULVERT CLEANING NOZZLE WITH REAR FACING SPREAD OF 45° (1 m) OR MORE IS PREFERRED
- B. APPLY MULTIPLE PASSES OF JETVAC UNTIL BACKFLUSH WATER IS CLEAN
- C. VACUUM STRUCTURE SUMP AS REQUIRED

STEP 3) REPLACE ALL COVERS, GRATES, FILTERS, AND LIDS; RECORD OBSERVATIONS AND ACTIONS.

STEP 4) INSPECT AND CLEAN BASINS AND MANHOLES UPSTREAM OF THE STORMTECH SYSTEM.

NOTES

1. INSPECT EVERY 6 MONTHS DURING THE FIRST YEAR OF OPERATION. ADJUST THE INSPECTION INTERVAL BASED ON PREVIOUS OBSERVATIONS OF SEDIMENT ACCUMULATION AND HIGH WATER ELEVATIONS.
2. CONDUCT JETTING AND VACTORING ANNUALLY OR WHEN INSPECTION SHOWS THAT MAINTENANCE IS NECESSARY.

NOTE:
INSPECTION PORTS MAY BE CONNECTED THROUGH ANY CHAMBER CORRUGATION CREST.

4" PVC INSPECTION PORT DETAIL (SC SERIES CHAMBER)
NTS

UNDERDRAIN DETAIL
NTS

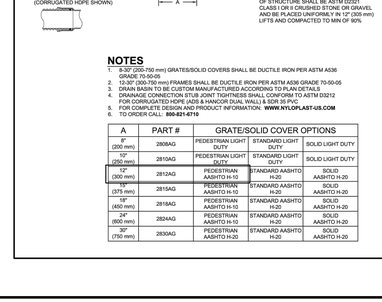

DC-780 TECHNICAL SPECIFICATION
NTS

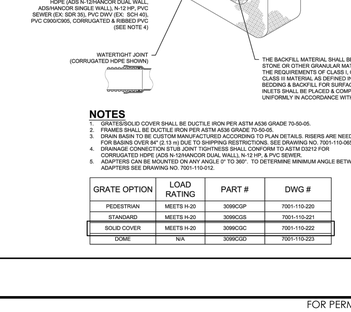

NOMINAL CHAMBER SPECIFICATIONS

SIZE (W X H X INSTALLED LENGTH)	51.0" X 30.0" X 85.4"	(1295 mm X 762 mm X 2169 mm)
CHAMBER STORAGE	46.2 CUBIC FEET	(1.30 m³)
MINIMUM INSTALLED STORAGE*	78.4 CUBIC FEET	(2.20 m³)
WEIGHT	75.0 lbs.	(33.6 kg)

*ASSUMES 6" (152 mm) STONE ABOVE, 9" (229 mm) BELOW, AND 6" (152 mm) BETWEEN CHAMBERS

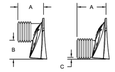

STUBS AT BOTTOM OF END CAP FOR PART NUMBERS ENDING WITH "B"
STUBS AT TOP OF END CAP FOR PART NUMBERS ENDING WITH "T"

PART #	STUB	A	B	C
SC740EPE06T / SC740EPE06TPC	6" (150 mm)	10.9" (277 mm)	18.5" (470 mm)	---
SC740EPE06B / SC740EPE06BPC			---	0.5" (13 mm)
SC740EPE08T / SC740EPE08TPC	8" (200 mm)	12.2" (310 mm)	16.5" (419 mm)	---
SC740EPE08B / SC740EPE08BPC			---	0.6" (15 mm)
SC740EPE10T / SC740EPE10TPC	10" (250 mm)	13.4" (340 mm)	14.5" (368 mm)	---
SC740EPE10B / SC740EPE10BPC			---	0.7" (18 mm)
SC740EPE12T / SC740EPE12TPC	12" (300 mm)	14.7" (373 mm)	12.3" (315 mm)	---
SC740EPE12B / SC740EPE12BPC			---	1.2" (30 mm)
SC740EPE15T / SC740EPE15TPC	15" (375 mm)	18.4" (467 mm)	9.0" (229 mm)	---
SC740EPE15B / SC740EPE15BPC			---	1.3" (33 mm)
SC740EPE18T / SC740EPE18TPC	18" (450 mm)	19.7" (500 mm)	5.0" (127 mm)	---
SC740EPE18B / SC740EPE18BPC			---	1.6" (41 mm)
SC740ECEZ*	24" (600 mm)	18.5" (470 mm)	---	0.1" (3 mm)

ALL STUBS, EXCEPT FOR THE SC740ECEZ ARE PLACED AT BOTTOM OF END CAP SUCH THAT THE OUTSIDE DIAMETER OF THE STUB IS FLUSH WITH THE BOTTOM OF THE END CAP. FOR ADDITIONAL INFORMATION CONTACT STORMTECH AT 1-888-892-2694.

* FOR THE SC740ECEZ THE 24" (600 mm) STUB LIES BELOW THE BOTTOM OF THE END CAP APPROXIMATELY 1.75" (44 mm). BACKFILL MATERIAL SHOULD BE REMOVED FROM BELOW THE N-12 STUB SO THAT THE FITTING SITS LEVEL.

NOTE: ALL DIMENSIONS ARE NOMINAL

SHEET 5 OF 6

NYLOPLAST DRAIN BASIN
NTS
TO BE USED FOR YD=2.0 AND YD=2.1

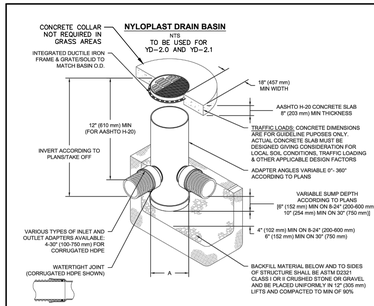

36" (900 mm) NYLOPLAST DRAIN BASIN
TO BE USED FOR YD=3.1

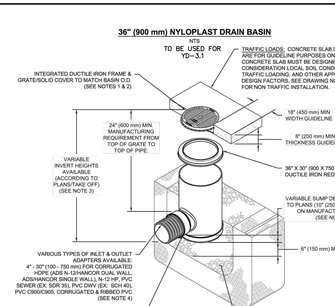

NOTES

1. 8-30" (200-750 mm) GRATE/SOLID COVERS SHALL BE DUCTILE IRON PER ASTM A536 GRADE 70-50-05
2. 12-30" (300-750 mm) FRAMES SHALL BE DUCTILE IRON PER ASTM A536 GRADE 70-50-05
3. DRAIN BASIN TO BE CU

LEGEND

- NPDES — NPDES BOUNDARY
- LOD — LIMITS OF DISTURBANCE
- PROPERTY LINE
- CFS — CFS — CFS — CFS — PROPOSED COMPOST FILTER SOCK
- PROPOSED CONSTRUCTION FENCE
- RCE — ROCK CONSTRUCTION ENTRANCE
- TOPSOIL STOCKPILE — TOPSOIL STOCKPILE
- IP — INLET PROTECTION
- CONCRETE WASHOUT
- EROSION CONTROL BLANKET NORTH AMERICAN GREEN S150
- SOIL BOUNDARY
- BeC — SOIL LABELS

COMPOST FILTER SOCK SIZES

SOCK NO.	DIA. (in)	LOCATION	CAPACITY UTILIZATION
1	12	East side of the site	88%
2	12	North side of the site	71%
3	8	Northeast corner of the site	70%
4	8	Northeast corner of the site	38%
5	8	Southeast corner of the site	23%
6	8	Southeast corner of the site	10%
7	8	Southwest corner of the site	46%
8	12	Southwest corner of the site	61%
9	8	East side of the site	34%
10	12	On the edge of the subsurface basin area	27%
11	8	On the edge of the bioretention basin area	28%
12	12	Northwest corner of the site	41%
13	8	Northwest corner of the site	12%
14	12	Topsoil stockpile area	N/A

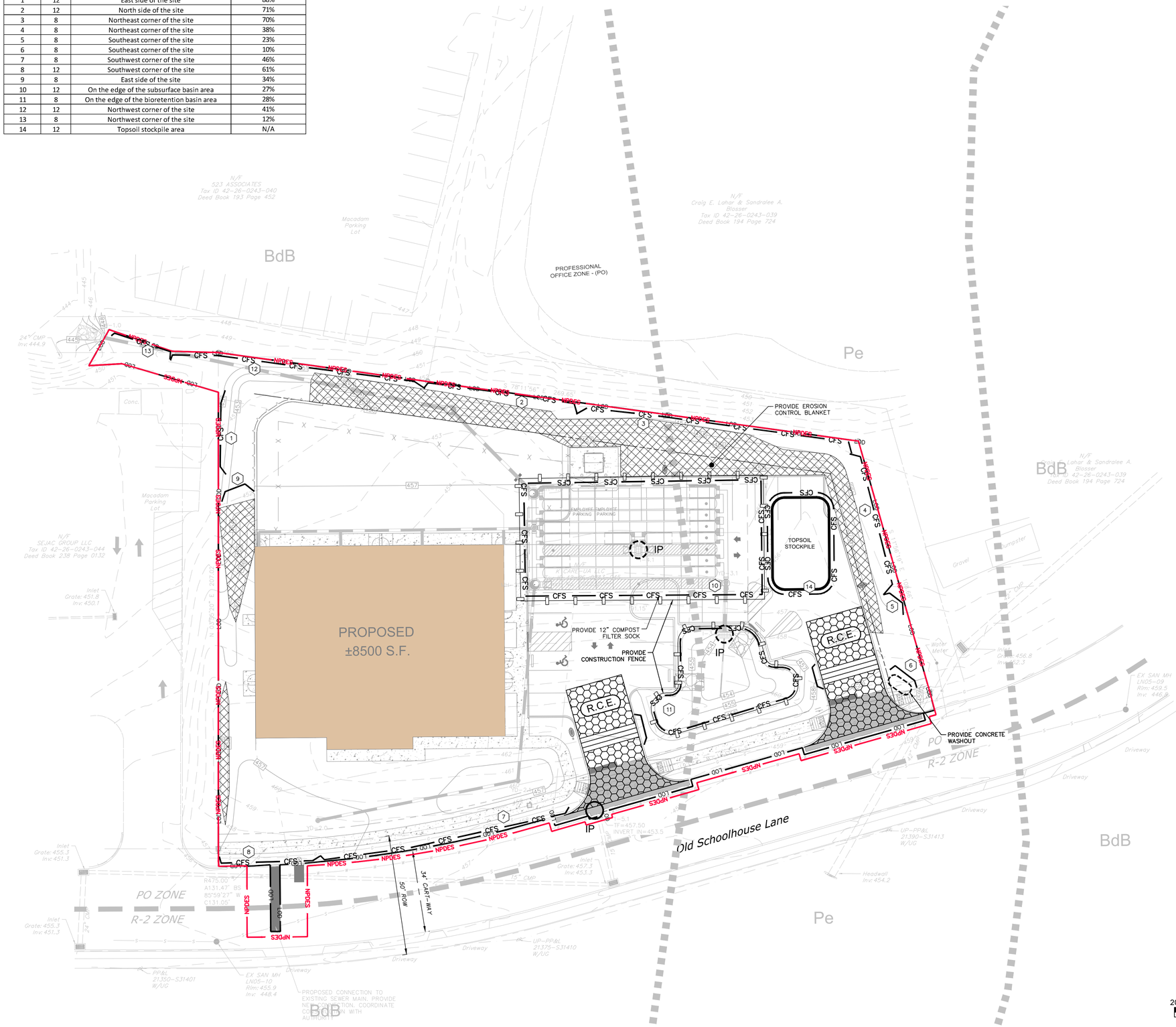

811 Know what's below. Call before you dig.

PENNSYLVANIA ACT 287 (1974) AS AMENDED BY PENNSYLVANIA ACT 199 (2004) REQUIRES NO LESS THAN THREE (3) WORKING DAYS AND NO MORE THAN (10) WORKING DAYS NOTICE TO UTILITIES BEFORE YOU EXCAVATE, DRILL, BLAST OR DEMOLISH. PA ONE-CALL SERIAL NO. 20231515029

© 2024 BL COMPANIES, INC. THESE DRAWINGS SHALL NOT BE UTILIZED BY ANY PERSON, FIRM OR CORPORATION WITHOUT THE SPECIFIC WRITTEN PERMISSION OF BL COMPANIES.

FOR PERMITTING PURPOSES ONLY NOT RELEASED FOR CONSTRUCTION

Architecture Engineering Environmental Land Surveying
BL Companies
2601 Market Place Suite 350 Harrisburg, PA 17110 (717) 943-1665

GENIUS KIDS CHILD DEVELOPMENT CENTER PLAY LEARN GROW

PRELIMINARY/FINAL LAND DEVELOPMENT PLAN
PROPOSED K CARE - UA (GENIUS KIDS)
OLD SCHOOLHOUSE LANE
UPPER ALLEN TOWNSHIP, CUMBERLAND COUNTY, PA

REVISIONS		
No.	Date	Desc.
1	09/29/2023	PER TOWNSHIP SKETCH PLAN COMMENTS
2	01/04/2024	PER TOWNSHIP PLAN REVIEW COMMENTS
3	01/24/2024	PER TOWNSHIP PLAN REVIEW COMMENTS
4	02/12/2024	PER TOWNSHIP PLAN REVIEW COMMENTS

Designed	C.L.H.
Drawn	N.M.
Reviewed	A.J.B.
Scale	1" = 20'
Project No.	2202027
Date	07/31/23
CAD File: EC220202701	

Title
EROSION & SEDIMENT CONTROL PLAN

Sheet No.
EC-1
No.17of 19

2/12/2024, CHERWAY, O:\CIVIL\2022\2022027\DWG\EC220202701.DWG EC-1

STANDARD E&S NOTES

1. ALL EARTH DISTURBANCES, INCLUDING CLEARING AND GRUBBING AS WELL AS CUTS AND FILLS SHALL BE DONE IN ACCORDANCE WITH THE APPROVED E&S PLAN. A COPY OF THE APPROVED DRAWINGS (STAMPED, SIGNED AND DATED BY THE REVIEWING AGENCY) MUST BE AVAILABLE AT THE PROJECT SITE AT ALL TIMES. THE REVIEWING AGENCY SHALL BE NOTIFIED OF ANY CHANGES TO THE APPROVED PLAN PRIOR TO IMPLEMENTATION OF THESE CHANGES. THE REVIEWING AGENCY MAY REQUIRE A WRITTEN SUBMITTAL OF THOSE CHANGES FOR REVIEW AND APPROVAL AT ITS DISCRETION.

2. AT LEAST 7 DAYS PRIOR TO STARTING ANY EARTH DISTURBANCE ACTIVITIES, INCLUDING CLEARING AND GRUBBING, THE OWNER AND/OR OPERATOR SHALL INVITE ALL CONTRACTORS, THE LANDOWNER, APPROPRIATE MUNICIPAL OFFICIALS, THE E&S PLAN PREPARER, THE PCSM PLAN PREPARER, THE LICENSED PROFESSIONAL RESPONSIBLE FOR OVERSIGHT OF CRITICAL STAGES OF IMPLEMENTATION OF THE PCSM PLAN, AND A REPRESENTATIVE FROM THE LOCAL CONSERVATION DISTRICT TO AN ON-SITE PRECONSTRUCTION MEETING.

CUMBERLAND COUNTY CONSERVATION DISTRICT
310 ALLEN ROAD, SUITE 301
CARLISLE, PA 17013
PHONE (717) 240-7812

1. AT LEAST 3 DAYS PRIOR TO STARTING ANY EARTH DISTURBANCE ACTIVITIES, OR EXPANDING INTO AN AREA PREVIOUSLY UNMARKED, THE PENNSYLVANIA ONE CALL SYSTEM INC SHALL BE NOTIFIED AT 1-800-242-1776 FOR THE LOCATION OF EXISTING UNDERGROUND UTILITIES.

2. ALL EARTH DISTURBANCE ACTIVITIES SHALL PROCEED IN ACCORDANCE WITH THE SEQUENCE PROVIDED ON THE PLAN DRAWINGS. DEVIATION FROM THAT SEQUENCE MUST BE APPROVED IN WRITING FROM THE LOCAL CONSERVATION DISTRICT OR BY THE DEPARTMENT PRIOR TO IMPLEMENTATION.

3. AREAS TO BE FILLED ARE TO BE CLEARED, GRUBBED, AND STRIPPED OF TOPSOIL TO REMOVE TREES, VEGETATION, ROOTS AND OTHER OBJECTIONABLE MATERIAL.

4. CLEARING, GRUBBING, AND TOPSOIL STRIPPING SHALL BE LIMITED TO THOSE AREAS DESCRIBED IN EACH STAGE OF THE CONSTRUCTION SEQUENCE. GENERAL SITE CLEARING, GRUBBING AND TOPSOIL STRIPPING MAY NOT COMMENCE IN ANY STAGE OR PHASE OF THE PROJECT UNTIL THE E&S BMPs SPECIFIED BY THE BMP SEQUENCE FOR THAT STAGE OR PHASE HAVE BEEN INSTALLED AND ARE FUNCTIONING AS DESCRIBED IN THIS E&S PLAN.

5. AT NO TIME SHALL CONSTRUCTION VEHICLES BE ALLOWED TO ENTER AREAS OUTSIDE THE LIMIT OF DISTURBANCE BOUNDARIES SHOWN ON THE PLAN MAPS. THESE AREAS MUST BE CLEARLY MARKED AND FENCED OFF BEFORE CLEARING AND GRUBBING OPERATIONS BEGIN.

6. TOPSOIL REQUIRED FOR THE ESTABLISHMENT OF VEGETATION SHALL BE STOCKPILED AT THE LOCATION(S) SHOWN ON THE PLAN MAP(S) IN THE AMOUNT NECESSARY TO COMPLETE THE FINISH GRADING OF ALL EXPOSED AREAS THAT ARE TO BE STABILIZED BY VEGETATION. EACH STOCKPILE SHALL BE PROTECTED IN THE MANNER SHOWN ON THE PLAN DRAWINGS. STOCKPILE HEIGHTS SHALL NOT EXCEED 35 FEET. STOCKPILE SLOPES SHALL BE 2H:1V OR FLATTER.

7. IMMEDIATELY UPON DISCOVERING UNFORESEEN CIRCUMSTANCES POSING THE POTENTIAL FOR ACCELERATED EROSION AND/OR SEDIMENT POLLUTION, THE OPERATOR SHALL IMPLEMENT APPROPRIATE BEST MANAGEMENT PRACTICES TO MINIMIZE THE POTENTIAL FOR EROSION AND SEDIMENT POLLUTION AND NOTIFY THE LOCAL CONSERVATION DISTRICT AND/OR THE REGIONAL OFFICE OF THE DEPARTMENT.

8. TYPICAL CONSTRUCTION WASTES ARE ANTICIPATED I.E. CONCRETE, ASPHALT, REBAR, LUMBER, BUILDING MATERIALS, ETC. THE CONTRACTOR SHALL DISPOSE OF WASTE MATERIALS OBTAINED FROM DEMOLITION ACTIVITIES IN A LEGAL MANNER, AND SHALL RECYCLE AS MUCH OF THE WASTE MATERIAL AS POSSIBLE, IN ACCORDANCE WITH THE APPLICABLE SECTIONS OF THE CONTRACT SPECIFICATIONS. ALL BUILDING MATERIALS AND WASTES MUST BE REMOVED FROM THE SITE AND RECYCLED OR DISPOSED OF IN ACCORDANCE WITH THE DEPARTMENT'S SOLID WASTE MANAGEMENT REGULATIONS AT 25 PA. CODE 260.1 ET SEQ., 271.1, AND 287.1 ET SEQ. NO BUILDING MATERIALS, WASTES, OR UNUSED BUILDING MATERIALS SHALL BE BURNED, BURIED, DUMPED, OR DISCHARGED AT THE SITE.

9. ALL OFF-SITE WASTE AND BORROW AREAS MUST HAVE AN E&S PLAN APPROVED BY THE LOCAL CONSERVATION DISTRICT OR THE DEPARTMENT FULLY IMPLEMENTED PRIOR TO BEING ACTIVATED.

10. THE CONTRACTOR IS RESPONSIBLE FOR ENSURING THAT ANY MATERIAL BROUGHT ON SITE IS CLEAN FILL. FORM FP-001 MUST BE RETAINED BY THE PROPERTY OWNER FOR ANY FILL MATERIAL AFFECTED BY A SPILL OR RELEASE OF A REGULATED SUBSTANCE BUT QUALIFYING AS CLEAN FILL DUE TO ANALYTICAL TESTING.

11. ALL PUMPING OF WATER FROM ANY WORK AREA SHALL BE DONE ACCORDING TO THE PROCEDURE DESCRIBED IN THIS PLAN, OVER UNDISTURBED VEGETATED AREAS.

12. UNTIL THE SITE IS STABILIZED, ALL EROSION AND SEDIMENT BMPs SHALL BE MAINTAINED PROPERLY. MAINTENANCE SHALL INCLUDE INSPECTIONS OF ALL EROSION AND SEDIMENT BMPs AFTER EACH RUNOFF EVENT AND ON A WEEKLY BASIS. ALL PREVENTATIVE AND REMEDIAL MAINTENANCE WORK, INCLUDING CLEAN OUT, REPAIR, REPLACEMENT, REGRADING, RESEEDING, REMULCHING AND RENETTING MUST BE PERFORMED IMMEDIATELY. IF THE E&S BMPs FAIL TO PERFORM AS EXPECTED, REPLACEMENT BMPs, OR MODIFICATIONS OF THOSE INSTALLED WILL BE REQUIRED.

13. A LOG SHOWING DATES THAT E&S BMPs WERE INSPECTED AS WELL AS ANY DEFICIENCIES FOUND AND THE DATE THEY WERE CORRECTED SHALL BE MAINTAINED ON THE SITE AND BE MADE AVAILABLE TO REGULATORY AGENCY OFFICIALS AT THE TIME OF INSPECTION.

14. SEDIMENT TRACKED ONTO ANY PUBLIC ROADWAY OR SIDEWALK SHALL BE RETURNED TO THE CONSTRUCITON SITE BY THE END OF EACH WORK DAY AND DISPOSED IN THE MANNER DESCRIBED IN THIS PLAN. IN NO CASE SHALL THE SEDIMENT BE WASHED, SHOVELED, OR SWEPT INTO ANY ROADSIDE DITCH, STORM SEWER, OR SURFACE WATER.

15. ALL SEDIMENT REMOVED FROM BMPs SHALL BE DISPOSED OF IN THE MANNER DESCRIBED ON THE PLAN DRAWINGS.

16. AREAS WHICH ARE TO BE TOPSOILED SHALL BE SCARIFIED TO A MINIMUM DEPTH OF 3 TO 5 INCHES - 6 TO 12 INCHES ON COMPACTED SOILS - PRIOR TO PLACEMENT OF TOPSOIL. AREAS TO BE VEGETATED SHALL HAVE A MINIMUM 4 INCHES OF TOPSOIL IN PLACE PRIOR TO SEEDING AND MULCHING. FILL OUTSLOPES SHALL HAVE A MINIMUM OF 2 INCHES OF TOPSOIL.

17. ALL FILLS SHALL BE COMPACTED AS REQUIRED TO REDUCE EROSION, SLIPPAGE, SETTLEMENT, SUBSIDENCE OR OTHER RELATED PROBLEMS. FILL INTENDED TO SUPPORT BUILDINGS, STRUCTURES AND CONDUITS, ETC. SHALL BE COMPACTED IN ACCORDANCE WITH LOCAL REQUIREMENTS OR CODES.

18. ALL EARTHEN FILLS SHALL BE PLACED IN COMPACTED LAYERS NOT TO EXCEED 9 INCHES IN THICKNESS.

19. FILL MATERIALS SHALL BE FREE OF FROZEN PARTICLES, BRUSH, ROOTS, SOD, OR OTHER FOREIGN OR OBJECTIONABLE MATERIALS THAT WOULD INTERFERE WITH OR PREVENT CONSTRUCTION OF SATISFACTORY FILLS.

20. FROZEN MATERIALS OR SOFT, MUCKY, OR HIGHLY COMPRESSIBLE MATERIALS SHALL NOT BE INCORPORATED INTO FILLS.

21. FILL SHALL NOT BE PLACED ON SATURATED OR FROZEN SURFACES.

22. SEEPS OR SPRINGS ENCOUNTERED DURING CONSTRUCTION SHALL BE HANDLED IN ACCORDANCE WITH THE STANDARD AND SPECIFICATION FOR SUBSURFACE DRAIN OR OTHER APPROVED METHOD.

23. ALL GRADED AREAS SHALL BE PERMANENTLY STABILIZED IMMEDIATELY UPON REACHING FINISHED GRADE. CUT SLOPES IN COMPETENT BEDROCK AND ROCK FILLS NEED NOT BE VEGETATED. SEEDED AREAS WITHIN 50 FEET OF A SURFACE WATER, OR AS OTHERWISE SHOWN ON THE PLAN DRAWINGS, SHALL BE BLANKETED ACCORDING TO THE STANDARDS OF THIS PLAN.

24. IMMEDIATELY AFTER EARTH DISTURBANCE ACTIVITIES CEASE IN ANY AREA OR SUBAREA OF THE PROJECT, THE OPERATOR SHALL STABILIZE ALL DISTURBED AREAS. DURING NON-GERMINATING MONTHS, MULCH OR PROTECTIVE BLANKETING SHALL BE APPLIED AS DESCRIBED IN THE PLAN. AREAS NOT AT FINISHED GRADE, WHICH WILL BE REACTIVATED WITHIN 1 YEAR, MAY BE STABILIZED IN ACCORDANCE WITH THE TEMPORARY STABILIZATION SPECIFICATIONS. THOSE AREAS WHICH WILL NOT BE REACTIVATED WITHIN 1 YEAR SHALL BE STABILIZED IN ACCORDANCE WITH THE PERMANENT STABILIZATION SPECIFICATIONS.

25. PERMANENT STABILIZATION IS DEFINED AS A MINIMUM UNIFORM, PERENNIAL 70% VEGETATIVE COVER OR OTHER PERMANENT NON-VEGETATIVE COVER WITH A DENSITY SUFFICIENT TO RESIST ACCELERATED EROSION. CUT AND FILL SLOPES SHALL BE CAPABLE OF RESISTING FAILURE DUE TO SLUMPING, SLIDING, OR OTHER MOVEMENTS.

26. E&S BMPs SHALL REMAIN FUNCTIONAL AS SUCH UNTIL ALL AREAS TRIBUTARY TO THEM ARE PERMANENTLY STABILIZED OR UNTIL THEY ARE REPLACED BY ANOTHER BMP APPROVED BY THE LOCAL CONSERVATION DISTRICT OR THE DEPARTMENT.

27. UPON COMPLETION OF ALL EARTH DISTURBANCE ACTIVITIES AND PERMANENT STABILIZATION OF ALL DISTURBED AREAS, THE OWNER AND/OR OPERATOR SHALL CONTACT THE LOCAL CONSERVATION DISTRICT FOR AN INSPECTION PRIOR TO REMOVAL/CONVERSION OF THE E&S BMPs.

28. AFTER FINAL SITE STABILIZATION HAS BEEN ACHIEVED, TEMPORARY EROSION AND SEDIMENT BMPs MUST BE REMOVED OR CONVERTED TO PERMANENT POST CONSTRUCTION STORMWATER MANAGEMENT BMPs. AREAS DISTURBED DURING REMOVAL OR CONVERSION OF THE BMPs SHALL BE STABILIZED IMMEDIATELY. IN ORDER TO ENSURE RAPID REVEGETATION OF DISTURBED AREAS, SUCH REMOVAL/CONVERSIONS ARE TO BE DONE ONLY DURING THE GERMINATING SEASON.

29. UPON COMPLETION OF ALL EARTH DISTURBANCE ACTIVITIES AND PERMANENT STABILIZATION OF ALL DISTURBED AREAS, THE OWNER AND/OR OPERATOR SHALL CONTACT THE LOCAL CONSERVATION DISTRICT TO SCHEDULE A FINAL INSPECTION.

30. FAILURE TO CORRECTLY INSTALL E&S BMPs, FAILURE TO PREVENT SEDIMENT-LADEN RUNOFF FROM LEAVING THE CONSTRUCTION SITE, OR FAILURE TO TAKE IMMEDIATE CORRECTIVE ACTION TO RESOLVE FAILURE OF E&S BMPs MAY RESULT IN ADMINISTRATIVE, CIVIL, AND/OR CRIMINAL PENALTIES BEING INSTITUTED BY THE DEPARTMENT AS DEFINED IN SECTION 602 OF THE PENNSYLVANIA CLEAN STREAMS LAW. THE CLEAN STREAMS LAW PROVIDES FOR UP TO $10,000 PER DAY IN CIVIL PENALTIES, UP TO $10,000 IN SUMMARY CRIMINAL PENALTIES, AND UP TO $25,000 IN MISDEMEANOR CRIMINAL PENALTIES FOR EACH VIOLATION.

31. INFILTRATION BMP AREAS SHALL BE PROTECTED FROM COMPACTION DURING CONSTRUCTION.

32. UPON TEMPORARY CESSATION OF AN EARTH DISTURBANCE ACTIVITY OR ANY STAGE OR PHASE OF AN ACTIVITY WHERE A CESSATION OF EARTH DISTURBANCE ACTIVITIES WILL EXCEED 4 DAYS, THE SITE SHALL BE IMMEDIATELY SEEDED, MULCHED, OR OTHERWISE PROTECTED FROM ACCELERATED EROSION AND SEDIMENTATION PENDING FUTURE EARTH DISTURBANCE ACTIVITIES.

SEQUENCE OF CONSTRUCTION

UNDERLINED PORTIONS OF THE SEQUENCE OF CONSTRUCTION INDICATE THAT THIS SECTION IS A CRITICAL STAGE OF PCSM INSTALLATION TO BE OBSERVED BY A LICENSED PROFESSIONAL OR DESIGNEE. NOTIFY SITE ENGINEER AT A MINIMUM OF 72 HOURS PRIOR TO BEGINNING STEP IDENTIFIED.

1. SCHEDULE WORK TO MINIMIZE THE LENGTH OF TIME THAT BARE SOIL WILL BE EXPOSED TO THE ELEMENTS.
2. FOLLOW THE CONSTRUCTION/EROSION CONTROL IMPLEMENTATION PLAN AS OUTLINED ON THE DRAWINGS.
3. IMPLEMENT CONTROL MEASURES AS SPECIFIED; HOWEVER, THE CONTRACTOR MAY INSERT ADDITIONAL CONSTRUCTION PHASES IN ORDER TO EXPEDITE HIS WORK.
4. THE CONTRACTOR IS REQUIRED TO PERFORM CONTINUOUS MAINTENANCE ON ALL TEMPORARY AND PERMANENT EROSION CONTROL MEASURES.
5. ALL EARTH DISTURBANCE ACTIVITIES SHALL PROCEED IN ACCORDANCE WITH THE SEQUENCE PROVIDED HEREON. DEVIATION FROM THIS SEQUENCE MUST BE APPROVED IN WRITING FROM THE CUMBERLAND COUNTY CONSERVATION DISTRICT OR BY DEP PRIOR TO IMPLEMENTATION.
6. IMMEDIATELY UPON DISCOVERING UNFORESEEN CIRCUMSTANCES POSING THE POTENTIAL FOR ACCELERATED EROSION AND/OR SEDIMENT POLLUTION, THE OPERATOR SHALL IMPLEMENT APPROPRIATE BMPS TO MINIMIZE THE POTENTIAL FOR EROSION AND SEDIMENT POLLUTION AND NOTIFY THE CUMBERLAND COUNTY CONSERVATION DISTRICT AND/OR THE REGIONAL OFFICE OF DEP.
7. AT LEAST 7 DAYS BEFORE STARTING ANY EARTH DISTURBANCE ACTIVITIES, THE OPERATOR SHALL INVITE ALL CONTRACTORS INVOLVED IN THOSE ACTIVITIES, THE LANDOWNER, ALL APPROPRIATE MUNICIPAL OFFICIALS, THE EROSION AND SEDIMENT CONTROL PLAN PREPARER, AND A REPRESENTATIVE OF THE CUMBERLAND COUNTY CONSERVATION DISTRICT TO AN ON-SITE PRE-CONSTRUCTION MEETING. ALSO, AT LEAST 3 DAYS PRIOR TO STARTING ANY EARTH DISTURBANCE ACTIVITIES, OR EXPANDING INTO AN AREA PREVIOUSLY UNMARKED, THE PENNSYLVANIA ONE CALL SYSTEM INC. SHALL BE NOTIFIED AT 1-800-242-1776 FOR THE LOCATION OF EXISTING UNDERGROUND UTILITIES.
8. BEFORE IMPLEMENTING ANY REVISIONS TO THE APPROVED EROSION AND SEDIMENT CONTROL PLAN OR REVISIONS TO OTHER PLANS WHICH MAY AFFECT THE EFFECTIVENESS OF THE APPROVED E&S CONTROL PLAN, THE OPERATOR MUST RECEIVE APPROVAL OF THE REVISIONS FROM THE CUMBERLAND COUNTY CONSERVATION DISTRICT.
9. ALL BUILDING MATERIALS AND WASTES MUST BE REMOVED FROM THE SITE AND RECYCLED OR DISPOSED OF IN ACCORDANCE WITH THE DEPARTMENT'S SOLID WASTE MANAGEMENT REGULATIONS AT 25 PA. CODE CHAPTER 260, §§260.1 ET SEQ., 271.1, AND 287.1 ET. SEQ. NO BUILDING MATERIALS OR WASTES OR UNUSED BUILDING MATERIALS SHALL BE BURNED, BURIED, DUMPED, OR DISCHARGED AT THE SITE.
10. ALL OFF-SITE WASTE AND BORROW AREAS MUST HAVE AN E&S PLAN APPROVED BY THE CUMBERLAND COUNTY CONSERVATION DISTRICT OR DEP FULLY IMPLEMENTED PRIOR TO BEING ACTIVATED. THE CONTRACTOR WILL BE RESPONSIBLE FOR THE REMOVAL OF ANY EXCESS MATERIAL AND TO DEVELOP A PLAN THAT MEETS THE CONDITIONS OF CHAPTER 102, NPDES PERMIT CONDITIONS, AND/OR OTHER STATE AND FEDERAL REGULATIONS.

CONSTRUCTION SEQUENCE FOR IMPROVEMENTS ARE AS FOLLOWS:

STAGE 1:
1. THE LIMIT OF DISTURBANCE AND CLEARING LIMITS SHALL BE PHYSICALLY MARKED IN THE FIELD AND APPROVED BY UPPER ALLEN TOWNSHIP AND THE CUMBERLAND COUNTY CONSERVATION DISTRICT PRIOR TO THE START OF WORK ON THE SITE.
2. CONSTRUCT THE ROCK CONSTRUCTION ENTRANCES AS SHOWN ON THE PLAN WITH DESIGNATED CONCRETE WASHOUT AREAS.
3. INSTALL COMPOST FILTER SOCKS AS SHOWN ON EC-1, AND INSTALL FILTER BAG INLET PROTECTION ON ALL EXISTING INLETS AS SHOWN ON THE PLANS. INSTALL TEMPORARY CONSTRUCTION FENCE AT BMP #1 BIORETENTION BASIN AND BMP #2 SUBSURFACE INFILTRATION BASIN FOOTPRINTS.
4. PERFORM DEMOLITION AS SHOWN ON EX-1. CLEAR AND GRUB SITE TO LIMIT OF DISTURBANCE.

STAGE 2:
5. PERFORM BULK GRADING OF THE SITE. DO NOT EXCAVATE BMP #1 BIORETENTION BASIN AND BMP #2 SUBSURFACE INFILTRATION BASIN AT THIS TIME.
6. BRING THE PROPOSED BUILDING PAD AND ALL OTHER SITE IMPROVEMENTS TO SUB-GRADE AND PREPARE PAD FOR BUILDING CONSTRUCTION.
7. CONSTRUCT ALL STORM SEWER, SANITARY SEWER, WATER LINES, GAS LINES, ELECTRIC LINES, AND OTHER UTILITIES OUTLINED ON THE PLANS. PERMANENTLY STABILIZE SLOPES WHICH HAVE ACHIEVED FINAL SITE GRADING. INSTALL STREET PLATES ON TRENCHES THROUGH OR NEAR THE CONSTRUCTION ENTRANCES AND PUBLIC ROADS. PLACE SPOIL MATERIAL ON THE UP SLOPE SIDE OF THE TRENCH. IMMEDIATELY STABILIZE IF BACKFILL IS NOT USED WITHIN THE SAME DAY. INSTALL INLET PROTECTION AS INDICATED ON EC-2.
8. INSTALL BMP #2 SUBSURFACE INFILTRATION BASIN. SEE SEPARATE SEQUENCE OF CONSTRUCTION. COMPLETE ALL ITEMS UNDER SEPARATE SEQUENCE OF CONSTRUCTION FOR SUBSURFACE INFILTRATION BASIN BEFORE PROCEEDING TO THE NEXT STEP.
11. INSTALL BMP #1 BIORETENTION BASIN. SEE SEPARATE SEQUENCE OF CONSTRUCTION. COMPLETE CONSTRUCTION FOR INFILTRATION BASIN BEFORE PROCEEDING TO THE NEXT STEP.
12. INSTALL COMPOST FILTER SOCKS NUMBER 10 & 11 AS SHOWN ON EC-2.
13. FINISH GRADING AND INSTALL CURBS, PAVEMENT STRUCTURES, PAVEMENT MARKINGS, SIDEWALKS, SIGNAGE, SITE AMENITIES, AND LANDSCAPING AS OUTLINED ON THE PLANS.
14. PERMANENTLY STABILIZE ALL DISTURBED AREAS NOT RECEIVING PAVEMENT OR CONCRETE SURFACE. IN AREAS DESIGNATED AS LAWN, TILL THE FIRST 6" OF SOIL, PLACE SOIL AMENDMENTS AS NECESSARY, AND SEED ALL AREAS OF PERMANENT LAWN AND PERVIOUS OPEN SPACE IN ACCORDANCE WITH THE LAWN SEEDING MIX. TILLING SHOULD BE PERFORMED ON DRY SOILS.
15. UPON COMPLETION OF ALL EARTH DISTURBANCE ACTIVITIES HAS OCCURRED, INCLUDING PERMANENT STABILIZATION OF ALL DISTURBED AREAS, THE OWNER SHALL CONTACT THE CUMBERLAND COUNTY CONSERVATION DISTRICT FOR AN INSPECTION PRIOR TO REMOVAL/CONVERSION OF THE E&S BMPS.
16. AN AS-BUILT SURVEY OF THE FACILITIES SHALL BE PROVIDED TO THE OWNER AND LICENSED PROFESSIONAL.
17. REMOVE AND PROPERLY DISPOSE/ RECYCLE E&S BMPS, INCLUDING ROCK CONSTRUCTION ENTRANCES WITH WASH RACKS, INLET PROTECTION, AND COMPOST FILTER SOCK. REPAIR AND PERMANENTLY STABILIZE AFFECTED BMP REMOVAL AREAS.

NOTES:

STABILIZATION - CURRENT REGULATIONS STATE:
(A) UPON COMPLETION OF AN EARTH DISTURBANCE ACTIVITY OR ANY STAGE OR PHASE OF AN ACTIVITY, THE SITE SHALL BE IMMEDIATELY SEEDED, MULCHED, OR OTHERWISE PROTECTED FROM ACCELERATED EROSION AND SEDIMENTATION.
(B) EROSION AND SEDIMENT CONTROL BMP'S SHALL BE IMPLEMENTED AND MAINTAINED UNTIL THE PERMANENT STABILIZATION IS COMPLETED.
(C) FOR AN EARTH DISTURBANCE ACTIVITY OR ANY STAGE OR PHASE OF AN ACTIVITY TO BE CONSIDERED PERMANENTLY STABILIZED, THE DISTURBED AREAS SHALL BE COVERED WITH ONE OF THE FOLLOWING:
(1) A MINIMUM UNIFORM 70% PERENNIAL VEGETATIVE COVER, WITH A DENSITY CAPABLE OF RESISTING ACCELERATED EROSION AND SEDIMENTATION.
(2) AN ACCEPTABLE BMP THAT PERMANENTLY MINIMIZES ACCELERATED EROSION SEDIMENTATION.

PERMANENT STABILIZATION IS DEFINED AS A MINIMUM UNIFORM, PERENNIAL 70% VEGETATIVE COVER OR OTHER PERMANENT NON-VEGETATIVE COVER WITH A DENSITY SUFFICIENT TO RESIST ACCELERATED EROSION. CUT AND FILL SLOPES SHALL BE CAPABLE OF RESISTING FAILURE DUE TO SLUMPING, SLIDING, OR OTHER MOVEMENTS.

SUBSURFACE INFILTRATION BASIN

BMP SEQUENCE OF CONSTRUCTION

1. REMOVE TEMPORARY CONSTRUCTION FENCE FOR ACCESS, AS NECESSARY. MAINTAIN INLET PROTECTION WITHIN ALL INSTALLED INLETS.

2. EXCAVATE INFILTRATION BASIN FOOTPRINT. MAINTAIN A MINIMUM DEPTH TO BEDROCK OF 2 FEET. IF 2 FEET CANNOT BE MAINTAINED, UTILIZE ENGINEERED FILL MATERIAL SECTION. THE EXISTING SUBGRADE UNDER THE BED AREAS SHOULD NOT BE COMPACTED OR SUBJECT TO EXCESSIVE CONSTRUCTION EQUIPMENT TRAFFIC PRIOR TO GEOTEXTILE AND STONE BED PLACEMENT. AREAS THAT ARE ACCIDENTALLY COMPACTED OR GRADED SHALL BE DECOMPACTED A MINIMUM OF 20 INCHES TO RESTORE SOIL COMPOSITION AND POROSITY AT NO ADDITIONAL COST TO THE OWNER. STRIP TOPSOIL AND PLACE ENGINEERED FILL SECTION IN FILL AREAS.

3. A QUALIFIED PROFESSIONAL SHALL TEST THE INFILTRATION RATES OF THE BASIN'S BOTTOM TO ENSURE THAT AN ACCEPTABLE INFILTRATION RATE IS ACHIEVED (0.10 IN./HR TO 10.0 IN./HR). A MINIMUM OF 3 TESTS IS REQUIRED. IF MEASURED INFILTRATION RATE IS OUTSIDE OF THE RANGE, CONTACT OWNER AND ENGINEER FOR ADDITIONAL RECOMMENDATIONS.

4. IF BED IS EXPOSED FOR MORE THAN 3 DAYS OR IF RAIN IS FORECAST PRIOR TO PLACEMENT OF GEOTEXTILE FABRIC AND/OR STONE, INSTALL COMPOST FILTER SOCK AROUND THE UPSLOPE PERIMETER OF THE BASIN FOOTPRINT IN ORDER TO PREVENT SEDIMENTATION OF THE BASIN BOTTOM.

5. WHERE EROSION OF SUBGRADE HAS CAUSED ACCUMULATION OF FINE MATERIALS AND/OR SURFACE PONDING, THIS MATERIAL SHOULD BE REMOVED WITH LIGHT EQUIPMENT AND THE UNDERLYING SOILS SCARIFIED TO A MINIMUM DEPTH OF 6 INCHES WITH A YORK RAKE (OR EQUIVALENT) AND LIGHT TRACTOR. ALL FINE GRADING SHOULD BE DONE BY HAND. ALL BED BOTTOMS SHOULD BE AT LEVEL GRADE.

6. GEOTEXTILE AND BED AGGREGATE SHOULD BE PLACED IMMEDIATELY AFTER APPROVAL OF SUBGRADE PREPARATION AND INSTALLATION OF STRUCTURES. INSTALL GEOTEXTILE FABRIC. GEOTEXTILE SHOULD BE PLACED IN ACCORDANCE WITH MANUFACTURER'S STANDARDS AND RECOMMENDATIONS. ADJACENT STRIPS OF GEOTEXTILE SHOULD OVERLAP A MINIMUM OF 16 INCHES. IT SHOULD ALSO BE SECURED AT LEAST 4 FEET OUTSIDE OF BED IN ORDER TO PREVENT ANY RUNOFF OR SEDIMENT FROM ENTERING THE STORAGE BED. THIS EDGE STRIP SHOULD REMAIN IN PLACE UNTIL ALL BARE SOILS CONTIGUOUS TO BEDS ARE STABILIZED AND/OR VEGETATED. AS THE SITE IS FULLY STABILIZED, EXCESS GEOTEXTILE ALONG BED EDGES CAN BE CUT BACK TO THE EDGE OF THE BED. CONTRACTOR SHALL PROVIDE AS-BUILT SURVEY OF INFILTRATION BED LIMITES AND GEOTEXTILE LINER ELEVAITON.

7. INSTALL INFILTRATION BASIN PIPING, STONE, STORAGE CHAMBERS, CLEANOUTS, AND OUTLET CONTROL STRUCTURE. CLEAN-WASHED, UNIFORMLY GRADED AGGREGATE SHOULD BE PLACED IN THE BED IN MAXIMUM 8-INCH LIFTS. EACH LAYER SHOULD BE LIGHTLY COMPACTED, WITH CONSTRUCTION EQUIPMENT KEPT OFF THE BED BOTTOM AS MUCH AS POSSIBLE. CONTRACTOR SHALL PROVIDE AS-BUILT SURVEY OF PIPE/CHAMBER INVERTS, CLEANOUT LOCAITONS AND ELEVATIONS, TOP OF STONE, OUTFALL STRUCTURE (INCLUDING WEIR ELEVATION AND ORIFICE SIZES AND ELEVATIONS).

8. STABILIZE SURFACE OVER BED AREA.

9. DO NOT REMOVE INLET PROTECTION OR OTHER EROSION AND SEDIMENT CONTROL MEASURES UNTIL SITE IS PERMANENTLY STABILIZED.

TEMPORARY SEEDING FOR SOIL STABILIZATION

1. SEEDING MIXTURE TYPE I (TOPSOIL STOCKPILES)

SPECIES:	ANNUAL RYEGRASS (70%) PERENNIAL RYEGRASS (30%)
% PURE LIVE SEED:	95%
APPLICATION RATE:	4LBS./MSF
FERTILIZER TYPE:	10-10-10
FERT. APPLICATION RATE	12.5 LBS/1,000 SF
LIMING RATE:	40 LBS/1,000 SF
MULCH TYPE:	STRAW
MULCH RATE:	140 LBS/1,000 SF
ANCHOR MATERIAL:	EC3000 COPOLYMER TACKIFIER
ANCHORING METHOD:	SLURRY, MIX AND SPRAY
ANCHORING RATE OF APPLICATION:	3 LBS/ACRE
SEEDING DATE:	AS REQUIRED

SOIL LIMITATIONS AND RESOLUTIONS

BdB: BERKS CHANNERY SILT LOAM, 8 TO 15 PERCENT SLOPES (NON-HYDRIC); HYDROLOGIC SOIL GROUP B
Pe: PENLAW SILT LOAM, 0 TO 3 PERCENT SLOPES (NON-HYDRIC); HYDROLOGIC SOIL GROUP C/D

LIMITATIONS:
- CUTBANKS CAVE
- CORROSION TO CONCRETE/STEEL
- DROUGHTY
- EASILY ERODIBLE
- DEPTH TO SATURATED ZONE/SEASONAL HIGH WATER TABLE
- HYDRIC/HYDRIC INCLUSIONS
- LOW STRENGTH/LANDSIDE PRONE
- SLOW PERCOLATION
- PIPING
- POOR SOURCE OF TOPSOIL
- MODERATE POTENTIAL FOR FROST ACTION
- MODERATE POTENTIAL FOR SINK HOLE

RESOLUTIONS:
- EXCAVATIONS WILL BE PROPERLY SUPPORTED BY SHEETING AND SHORING TO PREVENT CAVES.
- NO UNPROTECTED STEEL IS EXPECTED TO BE IN DIRECT CONTACT WITH SOILS.
- NO WETLANDS ARE PRESENT IN THE DEVELOPMENT AREA.
- A MAXIMUM OF 3:1 SLOPES ARE PROPOSED.
- EROSION CONTROL MATTING AND IMMEDIATE STABILIZATION WILL BE USED ON ALL STEEP SLOPES TO LIMIT EROSION.
- A FIELD INVESTIGATION OF PERCOLATION RATES AT THE INFILTRATION AREAS WAS PERFORMED TO VERIFY THE SOILS PERCOLATION CAPACITY.
- WATER TIGHT PIPE AND SUBSURFACE BASINS WILL BE USED TO MINIMIZE THE DANGER OF PIPING
- EXISTING TOPSOIL, WHICH HAS PROVEN TO BE SUITABLE WILL BE REUSED ON THE SITE
- PAVEMENT SUBBASE WILL BE PROVIDED TO MINIMIZE FROST AFFECTS.
- IN THE UNLIKELY EVENT OF SINKHOLE DISCOVERY; REPAIR SINKHOLE UNDER SUPERVISION AND DIRECTION OF A PA LICENSED GEOTECHNICAL ENGINEER.
- PROVIDE POSITIVE DRAINAGE ACROSS THE SITE.

LIME AND FERTILIZER APPLICATION RATES

TABLE 11.2

SOIL AMENDMENT	SOIL AMENDMENT APPLICATION RATE EQUIVALENTS: PERMANENT SEEDING APPLICATION RATE PER ACRE	PER 1,000 SQ. FT.	PER 1,000 SQ. YD.	NOTES
AGRICULTURAL LIME	6 TONS	240 LB.	2,480 LB.	OR AS PER SOIL TEST; MAY NOT BE REQUIRED IN AGRICULTURAL FIELDS
10-10-20 FERTILIZER	1,000 LB.	25 LB.	210 LB.	OR AS PER SOIL TEST; MAY NOT BE REQUIRED IN AGRICULTURAL FIELDS
TEMPORARY SEEDING APPLICATION RATE				
AGRICULTURAL LIME	1 TON	40 LB.	410 LB.	TYPICALLY NOT REQUIRED FOR TOPSOIL STOCKPILES
10-10-10 FERTILIZER	500 LB.	12.5 LB.	100. LB.	TYPICALLY NOT REQUIRED FOR TOPSOIL STOCKPILES

ADAPTED FROM PENN STATE, "EROSION CONTROL AND CONSERVATION PLANTINGS ON NONCROPLAND".
NOTE: A COMPOST BLANKET WHICH MEETS THE STANDARDS OF THIS CHAPTER MAY BE SUBSTITUTED FOR THE SOIL AMENDMENT SHOWN IN TABLE 11.2

UTILITY TRENCH WORK NOTES

1. ALL EXCAVATED MATERIAL SHALL BE PLACED ON THE HIGH SIDE OF THE TRENCH SO AS TO ALLOW THE TRENCH TO INTERCEPT ALL SILT LADEN RUNOFF.
2. CONTRACTOR SHALL ONLY EXCAVATE AS MUCH UTILITY TRENCH WORK AS CAN BE COMPLETED, BACKFILLED AND STABILIZED IN ONE DAY SO AS TO LIMIT THE AMOUNT OF OPEN, DISTURBED TRENCHING.

ADDITIONAL NOTES

1. CONCRETE WASH WATER SHALL BE HANDLED IN THE MANNER DESCRIBED ON THE PLAN DRAWINGS. IN NO CASE SHALL IT BE ALLOWED TO ENTER ANY SURFACE WATERS OR GROUNDWATER SYSTEMS.
2. ALL CHANNELS SHALL BE KEPT FREE OF OBSTRUCTIONS INCLUDING BUT NOT LIMITED TO FILL, ROCKS, LEAVES, WOODY DEBRIS, ACCUMULATED SEDIMENT, EXCESS VEGETATION, AND CONSTRUCTION MATERIAL/WASTES.
3. UNDERGROUND UTILITIES CUTTING THROUGH ANY ACTIVE CHANNEL SHALL BE IMMEDIATELY BACKFILLED AND THE CHANNEL RESTORED TO ITS ORIGINAL CROSS-SECTION AND PROTECTION LINING. ANY BASE FLOW WITH

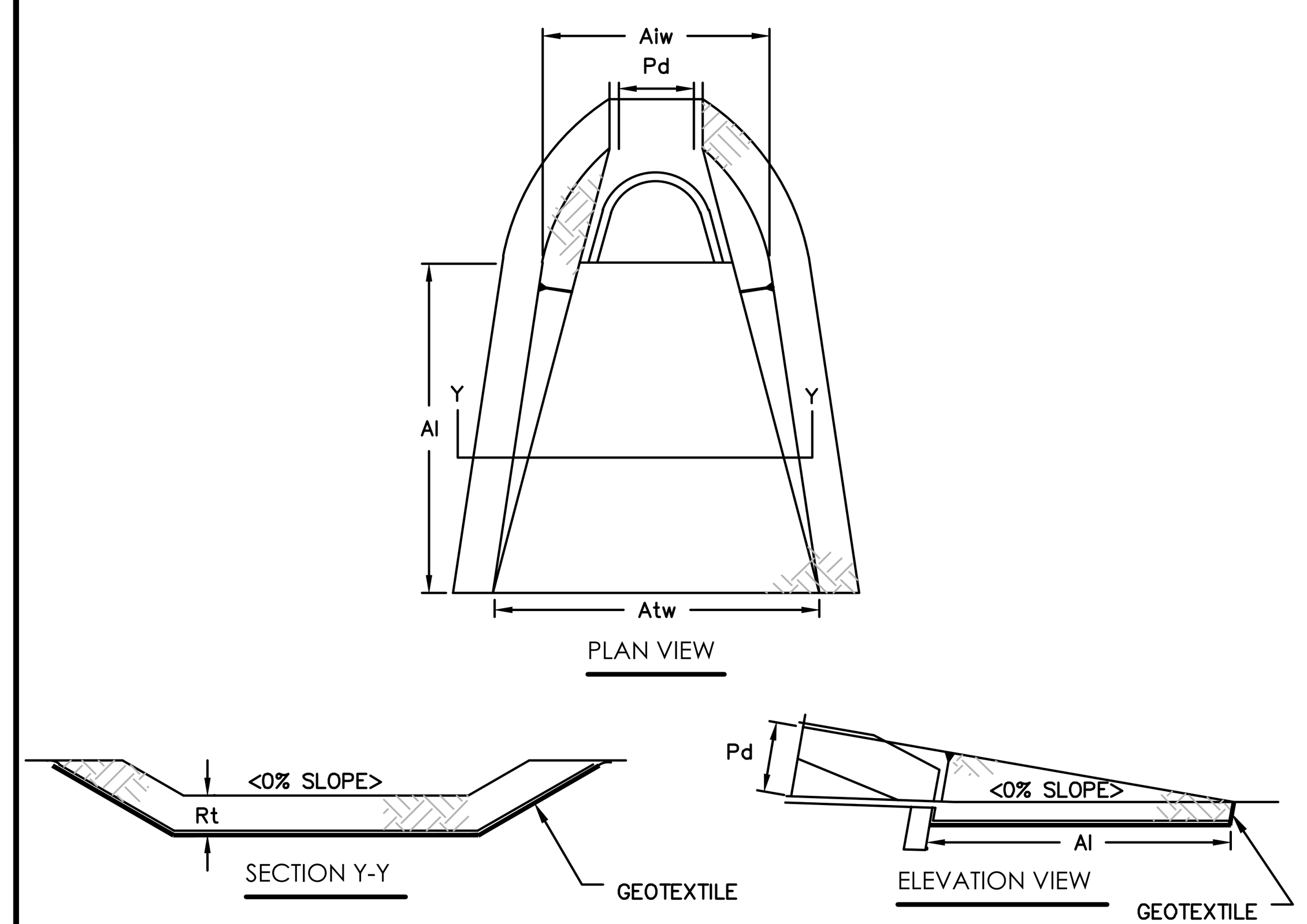

OUTLET NO.	PIPE DIA Pd (IN)	RIPRAP		APRON		
		SIZE (R–_)	THICK. Rt (IN)	LENGTH Al (FT)	INITIAL WIDTH Aiw (FT)	TERMINA L WIDTH Atw (FT)
EW–1.0	15	3	9	8	3.75	11.75

ALL APRONS SHALL BE CONSTRUCTED TO THE DIMENSIONS SHOWN. TERMINAL WIDTHS SHALL BE ADJUSTED AS NECESSARY TO MATCH RECEIVING CHANNELS.

ALL APRONS SHALL BE INSPECTED AT LEAST WEEKLY AND AFTER EACH RUNOFF EVENT. DISPLACED RIPRAP WITHIN THE APRON SHALL BE REPLACED IMMEDIATELY.

RIPRAP APRON AT PIPE OUTLET WITH FLARED END SECTION OR ENDWALL DETAIL

N.T.S PAEC–9–1

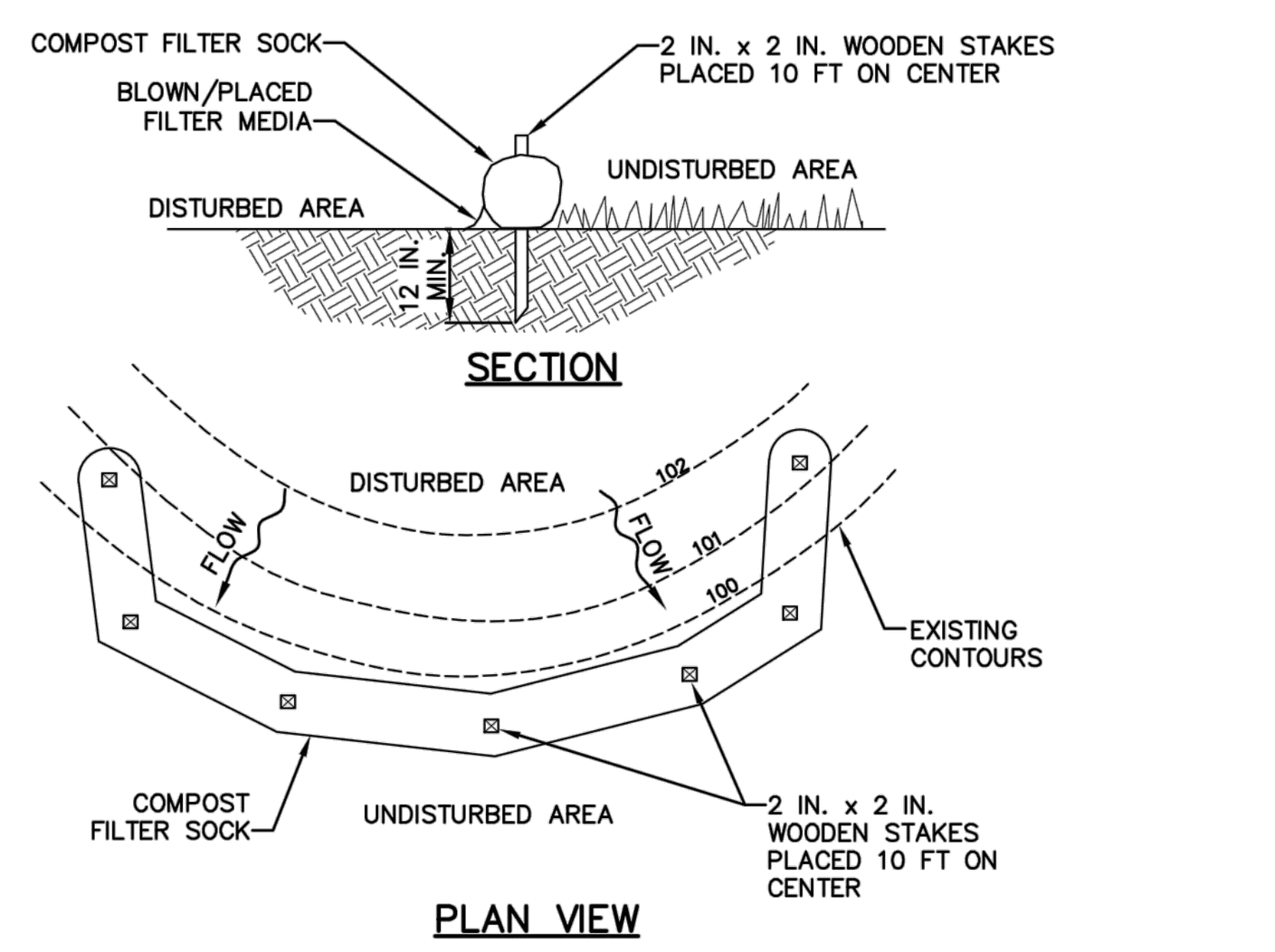

NOTES:

SOCK FABRIC SHALL MEET STANDARDS OF TABLE 4.1 OF THE PA DEP EROSION CONTROL MANUAL. COMPOST SHALL MEET THE STANDARDS OF TABLE 4.2 OF THE PA DEP EROSION CONTROL MANUAL.

COMPOST FILTER SOCK SHALL BE PLACED AT EXISTING LEVEL GRADE. BOTH ENDS OF THE BARRIER SHALL BE EXTENDED AT LEAST 8 FEET UP SLOPE AT 45 DEGREES TO THE MAIN BARRIER ALIGNMENT. MAXIMUM SLOPE LENGTH ABOVE ANY BARRIER SHALL NOT EXCEED THAT SPECIFIED FOR THE SIZE OF THE SOCK AND THE SLOPE OF ITS TRIBUTARY AREA.

TRAFFIC SHALL NOT BE PERMITTED TO CROSS COMPOST FILTER SOCKS.

ACCUMULATED SEDIMENT SHALL BE REMOVED WHEN IT REACHES 1/2 THE ABOVE GROUND HEIGHT OF THE BARRIER AND DISPOSED IN THE MANNER DESCRIBED ELSEWHERE IN THE PLAN.

COMPOST FILTER SOCKS SHALL BE INSPECTED WEEKLY AND AFTER EACH RUNOFF EVENT. DAMAGED SOCKS SHALL BE REPAIRED ACCORDING TO MANUFACTURER'S SPECIFICATIONS OR REPLACED WITHIN 24 HOURS OF INSPECTION.

BIODEGRADABLE COMPOST FILTER SOCKS SHALL BE REPLACED AFTER 6 MONTHS; PHOTODEGRADABLE SOCKS AFTER 1 YEAR. POLYPROPYLENE SOCKS SHALL BE REPLACED ACCORDING TO MANUFACTURER'S RECOMMENDATIONS.

UPON STABILIZATION OF THE AREA TRIBUTARY TO THE SOCK, STAKES SHALL BE REMOVED. THE SOCK MAY BE LEFT IN PLACE AND VEGETATED OR REMOVED. IN THE LATTER CASE, THE MESH SHALL BE CUT OPEN AND THE MULCH SPREAD AS A SOIL SUPPLEMENT.

UPPER ALLEN TOWNSHIP CONSTRUCTION & MATERIAL SPECIFICATIONS

C.S.Davidson,Inc. — Excellence in Civil Engineering
38 N. DUKE STREET YORK, PA • PHONE (717) 846–4805 • FAX (717)846–5811
50 WEST MIDDLE ST. GETTYSBURG, PA • PHONE (717) 337–3021 • FAX (717) 337–0782
315 W. JAMES ST., SUITE 102 LANCASTER, PA • PHONE (717) 481–2991 • FAX (717) 481–8690
WWW.CSDAVIDSON.COM

COMPOST FILTER SOCK DETAIL

UPPER ALLEN TWP. CUMBERLAND COUNTY , PENNSYLVANIA

DRAWN BY	CJM
CHECKED BY	
SCALE	N.T.S.
DATE	9/14/16
DWG. NO.	HT02270-4
FILE NO.	3566.9.03.00

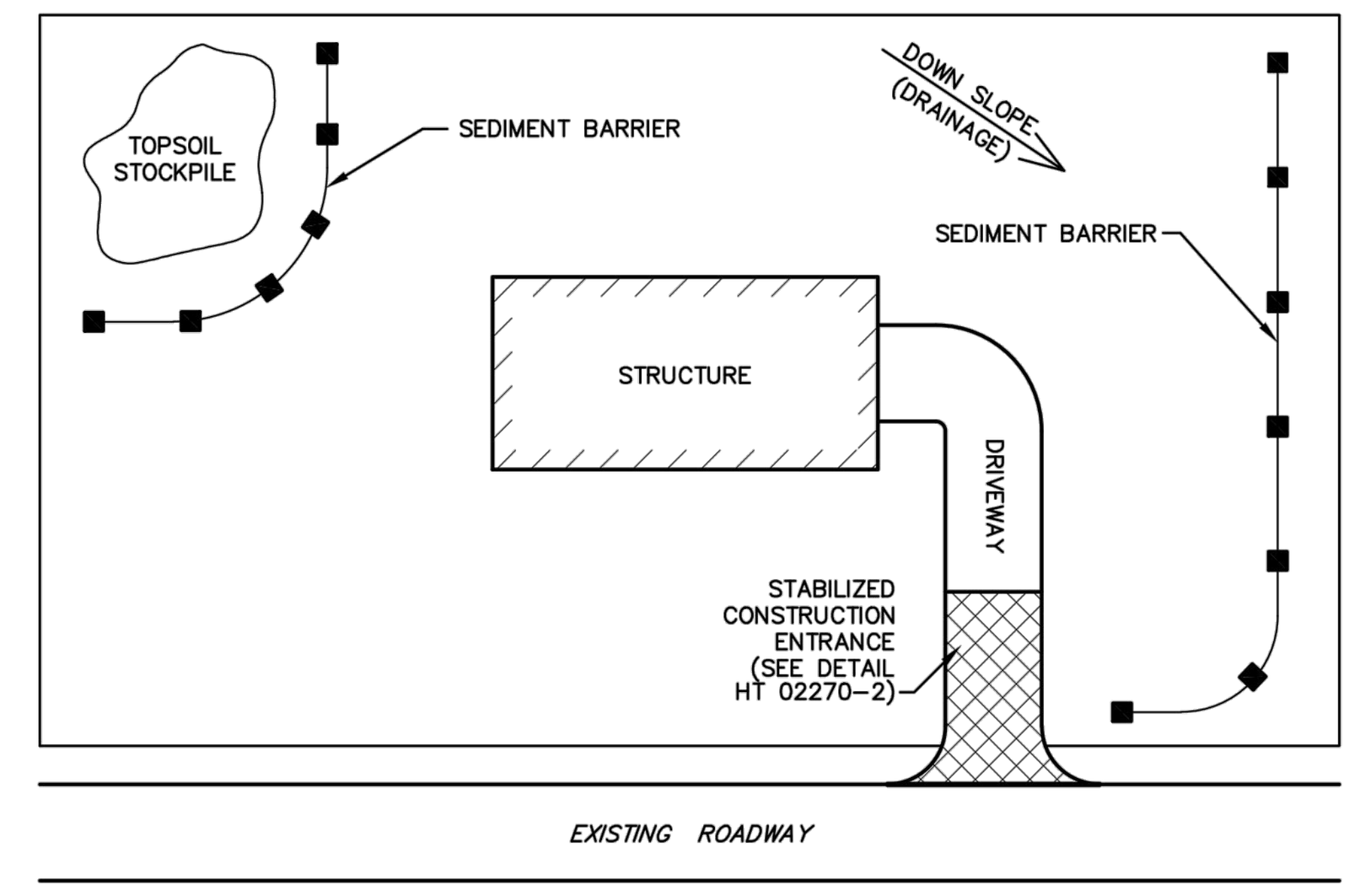

TYPICAL CONSTRUCTION SEQUENCE

1. INSTALL STABILIZED CONSTRUCTION ENTRANCE.
2. INSTALL ACCEPTABLE SEDIMENT BARRIERS ALONG THE DOWNSLOPE EDGE OF THE PROPERTY.
3. STRIP TOPSOIL AND STOCKPILE ON UPSLOPE PORTIONS OF THE AREA.
4. ROUGH GRADE THE AREA.
5. SEED AND MULCH ALL DISTURBED AREAS. TEMPORARY COVER SHALL BE ANNUAL RYE GRASS APPLIED AT A SEEDING RATE OF 10 POUNDS PER 1000 SQUARE YARDS.
6. INSPECT AND MAINTAIN EROSION AND SEDIMENTATION CONTROLS ON A REGULAR BASIS. EROSION AND SEDIMENTATION CONTROLS SHALL NOT BE REMOVED UNTIL THE DISTURBED AREAS ARE STABILIZED.
7. ENSURE ALL VEHICLES LEAVING THE SITE HAVE MUD REMOVED FROM TIRES AND UNDERCARRIAGES.

UPPER ALLEN TOWNSHIP CONSTRUCTION & MATERIAL SPECIFICATIONS

C.S.Davidson,Inc. — Excellence in Civil Engineering
38 N. DUKE STREET YORK, PA • PHONE (717) 846–4805 • FAX (717)846–5811
50 WEST MIDDLE ST. GETTYSBURG, PA • PHONE (717) 337–3021 • FAX (717) 337–0782
315 W. JAMES ST., SUITE 102 LANCASTER, PA • PHONE (717) 481–2991 • FAX (717) 481–8690
WWW.CSDAVIDSON.COM

GENERAL SOIL EROSION CONTROL FOR RESIDENTIAL SITES

UPPER ALLEN TWP. CUMBERLAND COUNTY , PENNSYLVANIA

DRAWN BY	CJM
CHECKED BY	
SCALE	N.T.S.
DATE	9/14/16
DWG. NO.	HT02270-1
FILE NO.	3566.9.03.00

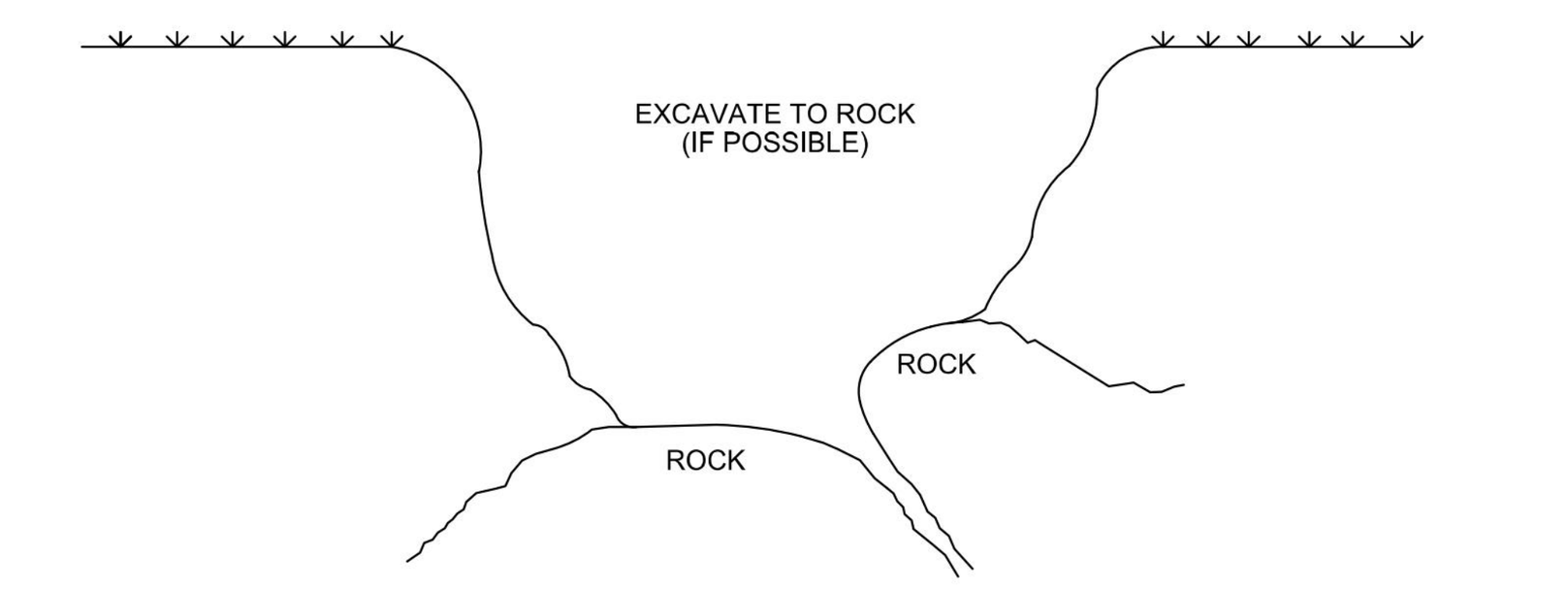

STEP 1: EXCAVATE THE SINKHOLE DOWN TO ROCK, IF POSSIBLE.

STEP 2: CLEAN OUT ALL LOOSE SOIL AND EXPOSE THROAT, IF POSSIBLE.

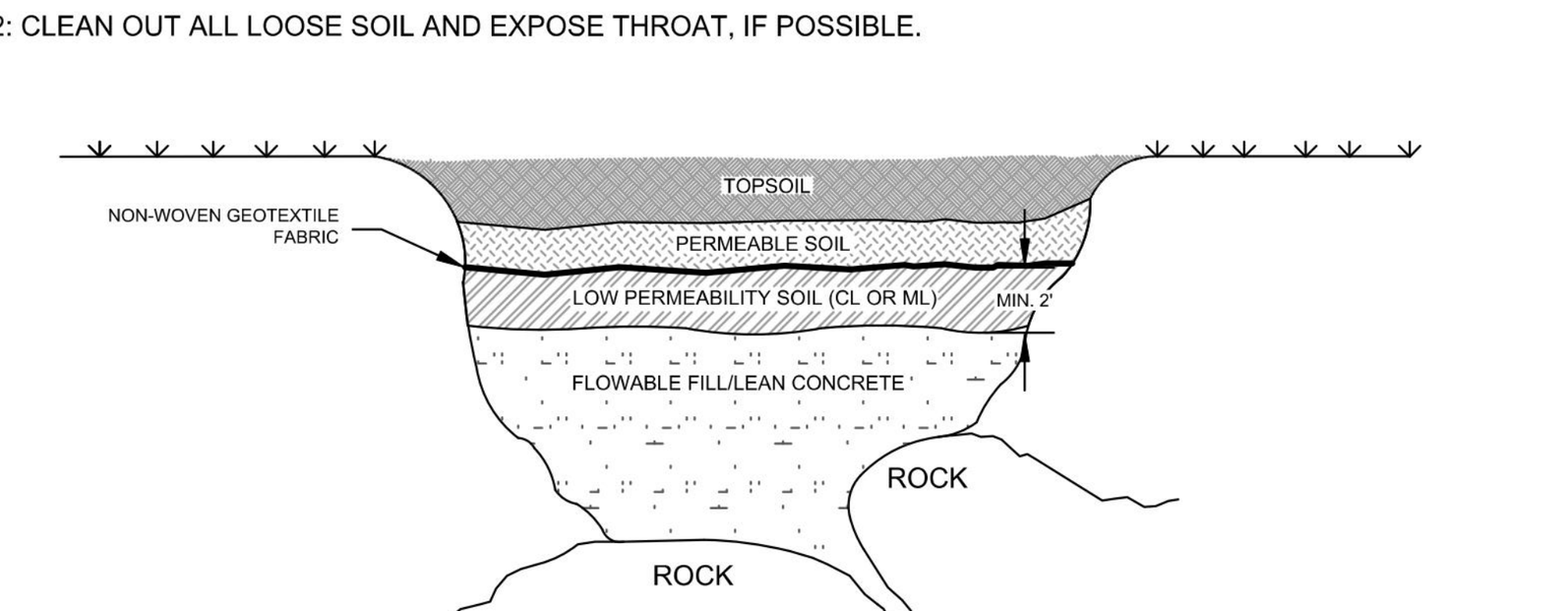

STEP 3: PLACE APPROXIMATELY 2 TO 3 FEET (OR AS NEEDED) OF FLOWABLE FILL/LEAN CONCRETE.

STEP 4: COMPACT LOW PERMEABILITY SOIL (CL OR ML MATERIALS) OVER FLOWABLE FILL/LEAN CONCRETE TO A MINIMUM THICKNESS OF 2 FEET.

STEP 5: COVER THE SOIL WITH NON-WOVEN GEOTEXTILE FABRIC.

STEP 6: COVER GEOTEXTILE WITH PERMEABLE SOIL, COMPATIBLE WITH THE ON-SITE SOILS. COMPACT TO A MINIMUM OF 95% OF THE MAXIMUM DRY DENSITY (MDD) AS OBTAINED BY ASTM D698 (OR 92% OF THE MDD AS OBTAINED BY ASTM D1557.)

STEP 7: FILL THE REMAINDER OF THE HOLE WITH SOIL TO MATCH GRADE. THIS CAN BE LAYERED TO MATCH THE EXISTING SOIL PROFILE.

NOTE: ALL SINKHOLE REPAIRS SHOULD BE PERFORMED UNDER THE SUPERVISION OF A GEOTECHNICAL ENGINEER EXPERIENCED WITH CARBONATE GEOLOGY AND SINKHOLE REPAIR PROCEDURES. DETAILS CAN BE MODIFIED AT THE DESCRETION OF THE GEOTECHNICAL ENGINEER BASED ON THE ENCOUNTERED CONDITIONS.POSITIVE DRAINAGE AWAY FROM THE OPEN EXCAVATION SHOULD BE MAINTAINED.

ECS MID-ATLANTIC, LLC
52-6 GRUMBACHER ROAD
YORK, PA 17406
(717)-767-4788

TYPICAL SINKHOLE REPAIR DETAIL

GROUTED REPAIR

NOT TO SCALE

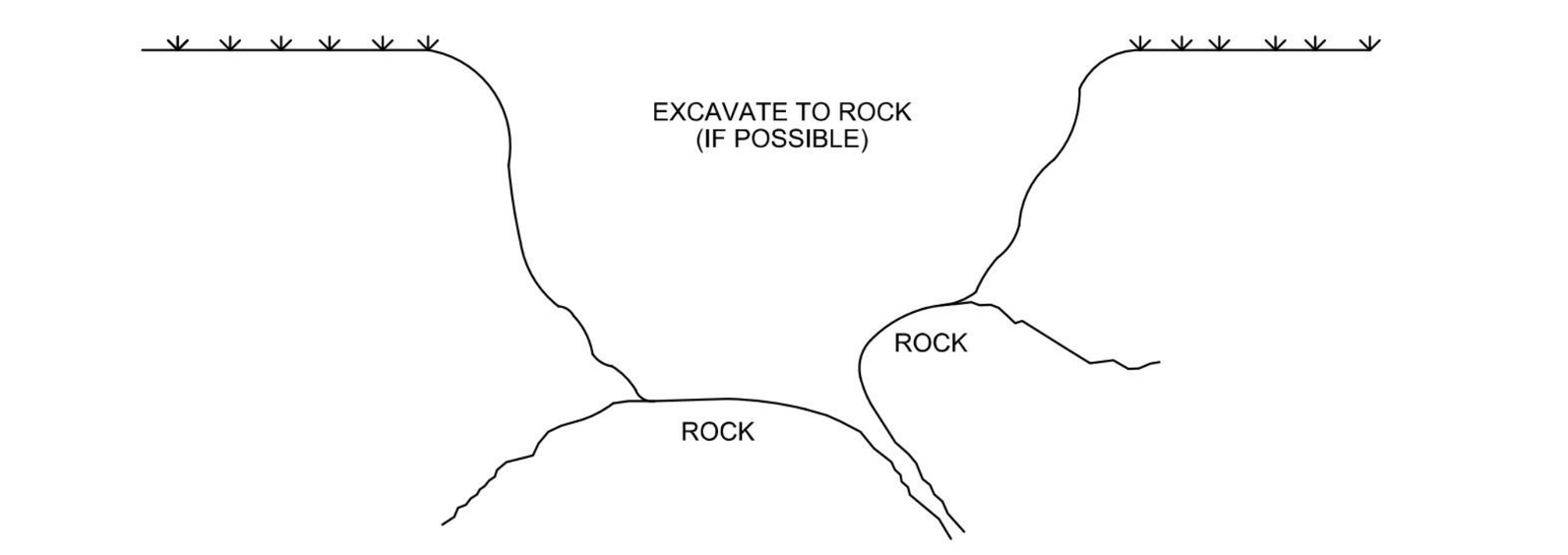

STEP 1: EXCAVATE THE SINKHOLE DOWN TO ROCK, IF POSSIBLE.

STEP 2: CLEAN OUT ALL LOOSE SOIL AND EXPOSE THROAT, IF POSSIBLE.

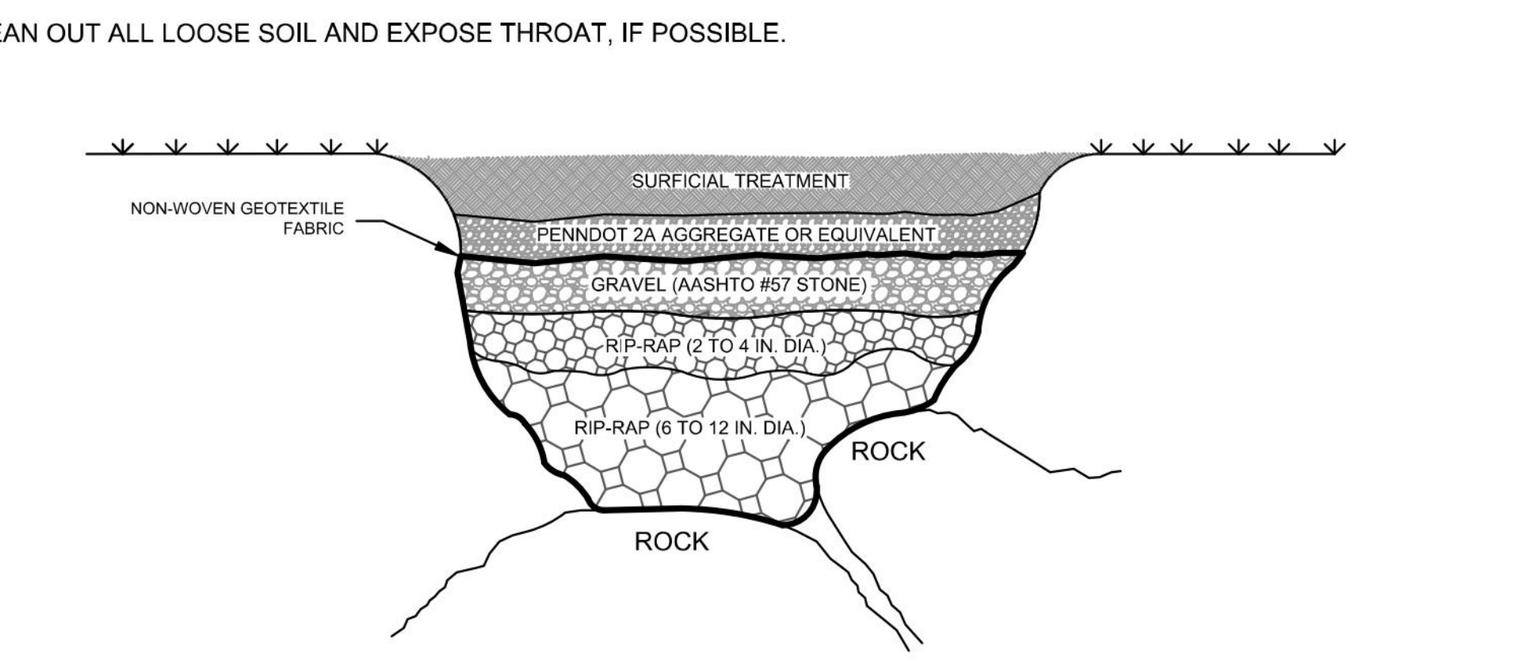

STEP 3: LINE THE EXCAVATION WITH NON-WOVEN GEOTEXTILE FABRIC (MIRAFI 140N OR EQUIVALENT.

STEP 4: PLACE A LAYER OF LARGE STONE IN THE EXCAVATION. STONE SHOULD BE APPROXIMATELY 6 TO 12 INCHES IN DIAMETER.

STEP 5: PLACE A LAYER OF SMALLER STONE ON TOP. THIS LAYER SHOULD CONSIST OF STONES APPROXIMATELY 2 TO 4 INCHES IN DIAMETER.

STEP 6: PLACE A LAYER OF GRAVEL ON TOP OF THE SMALLER STONES. THE GRAVEL SHOULD BE AASHTO #57 STONE OR EQUIVALENT.

STEP 7: COVER THE GRAVEL WITH THE GEOTEXTILE FABRIC. THIS WILL PREVENT THE FINES FROM THE NEXT LAYER FROM BEING LOST IN THE VOID SPACE OF THE GRAVEL/STONE.

STEP 8: PLACE A LAYER OF PENNDOT 2A AGGREGATE OR EQUIVALENT ON TOP OF THE GEOTEXTILE FABRIC. COMPACT TO A MINIMUM OF 95% OF THE MAXIMUM DRY DENSITY (MDD) AS OBTAINED BY ASTM D698 (OR 92% OF THE MDD AS OBTAINED BY ASTM D1557.)

STEP 9: FILL THE REMAINDER OF THE HOLE WITH SOIL TO MATCH GRADE. THIS CAN BE LAYERED TO MATCH THE EXISTING SOIL PROFILE.

NOTE: IDEALLY EACH LAYER IS APPROXIMATELY 6 INCHES TO 2 FEET THICK; HOWEVER, THICKER LAYERS ARE SOMETIMES WARRANTED DEPENDING ON THE DEPTH OF THE FEATURE.ALL SINKHOLE REPAIRS SHOULD BE PERFORMED UNDER THE SUPERVISION OF A GEOTECHNICAL ENGINEER EXPERIENCED WITH CARBONATE GEOLOGY AND SINKHOLE REPAIR PROCEDURES. DETAILS CAN BE MODIFIED AT THE DESCRETION OF THE GEOTECHNICAL ENGINEER BASED ON THE ENCOUNTERED CONDITIONS. POSITIVE DRAINAGE AWAY FROM THE OPEN EXCVATION SHOULD BE MAINTAINED.

ECS MID-ATLANTIC, LLC
52-6 GRUMBACHER ROAD
YORK, PA 17406
(717)-767-4788

TYPICAL SINKHOLE REPAIR DETAIL

STONE TYPE REPAIR

NOT TO SCALE

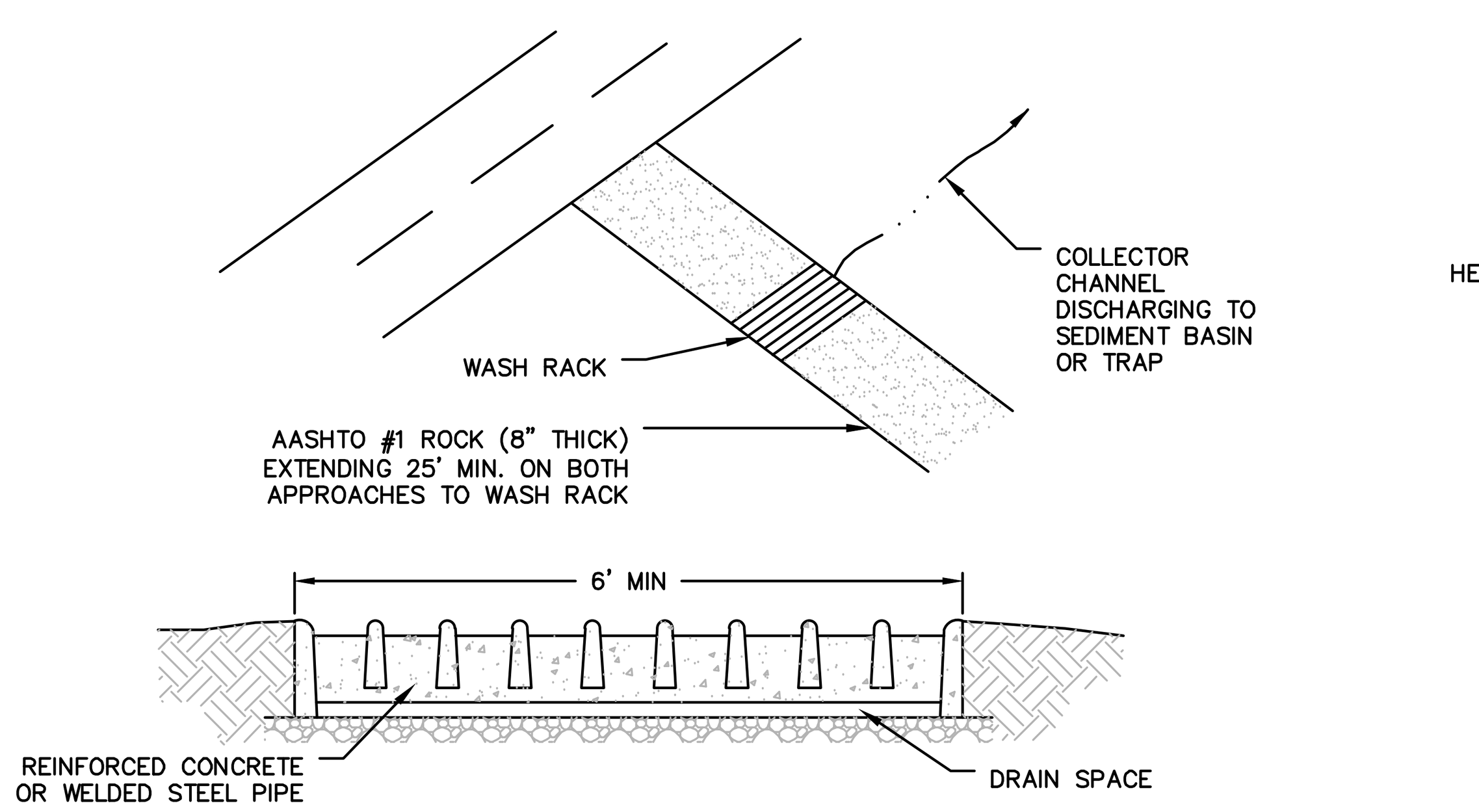

WASH RACK SHALL BE 20 FEET (MIN.) WIDE OR TOTAL WIDTH OF ACCESS.

WASH RACK SHALL BE DESIGNED AND CONSTRUCTED TO ACCOMMODATE ANTICIPATED CONSTRUCTION VEHICULAR TRAFFIC.

A WATER SUPPLY SHALL BE MADE AVAILABLE TO WASH THE WHEELS OF ALL VEHICLES EXITING THE SITE.

MAINTENANCE: ROCK CONSTRUCTION ENTRANCE THICKNESS SHALL BE CONSTANTLY MAINTAINED TO THE SPECIFIED DIMENSIONS BY ADDING ROCK. A STOCKPILE OF ROCK MATERIAL SHALL BE MAINTAINED ON SITE FOR THIS PURPOSE. DRAIN SPACE UNDER WASH RACK SHALL BE KEPT OPEN AT ALL TIMES. DAMAGE TO THE WASH RACK SHALL BE REPAIRED PRIOR TO FURTHER USE OF THE RACK. ALL SEDIMENT DEPOSITED ON ROADWAYS SHALL BE REMOVED AND RETURNED TO THE CONSTRUCTION SITE IMMEDIATELY. WASHING THE ROADWAY OR SWEEPING THE DEPOSITS INTO ROADWAY DITCHES, SEWERS, CULVERTS, OR OTHER DRAINAGE COURSES IS NOT ACCEPTABLE.

ROCK CONSTRUCTION ENTRANCE WITH WASH RACK DETAIL

N.T.S PADEP–3–2

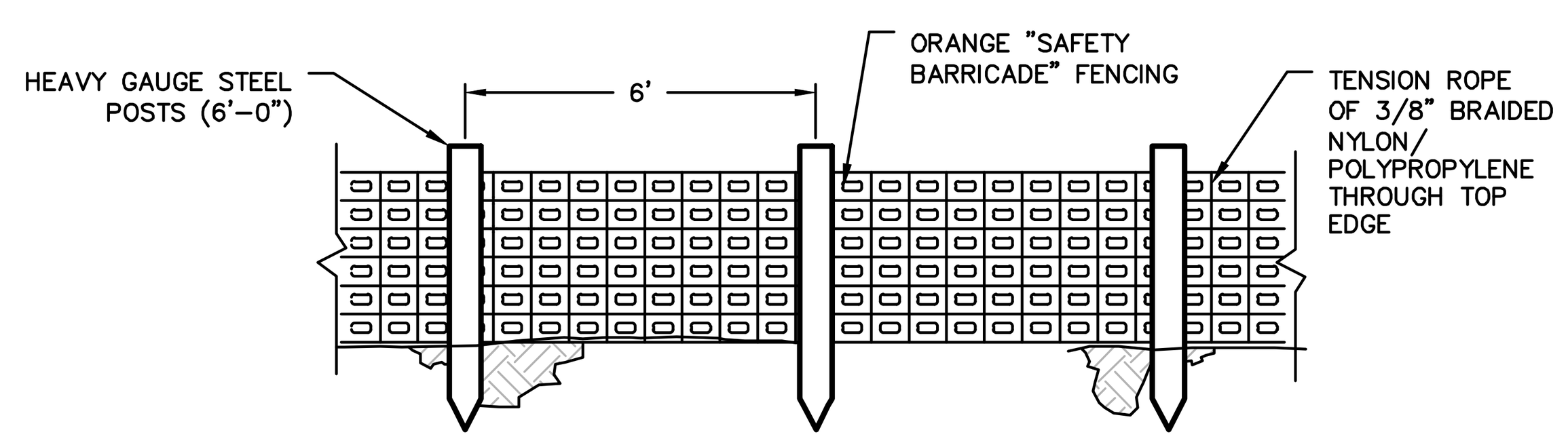

TEMPORARY CONSTRUCTION FENCE

N.T.S

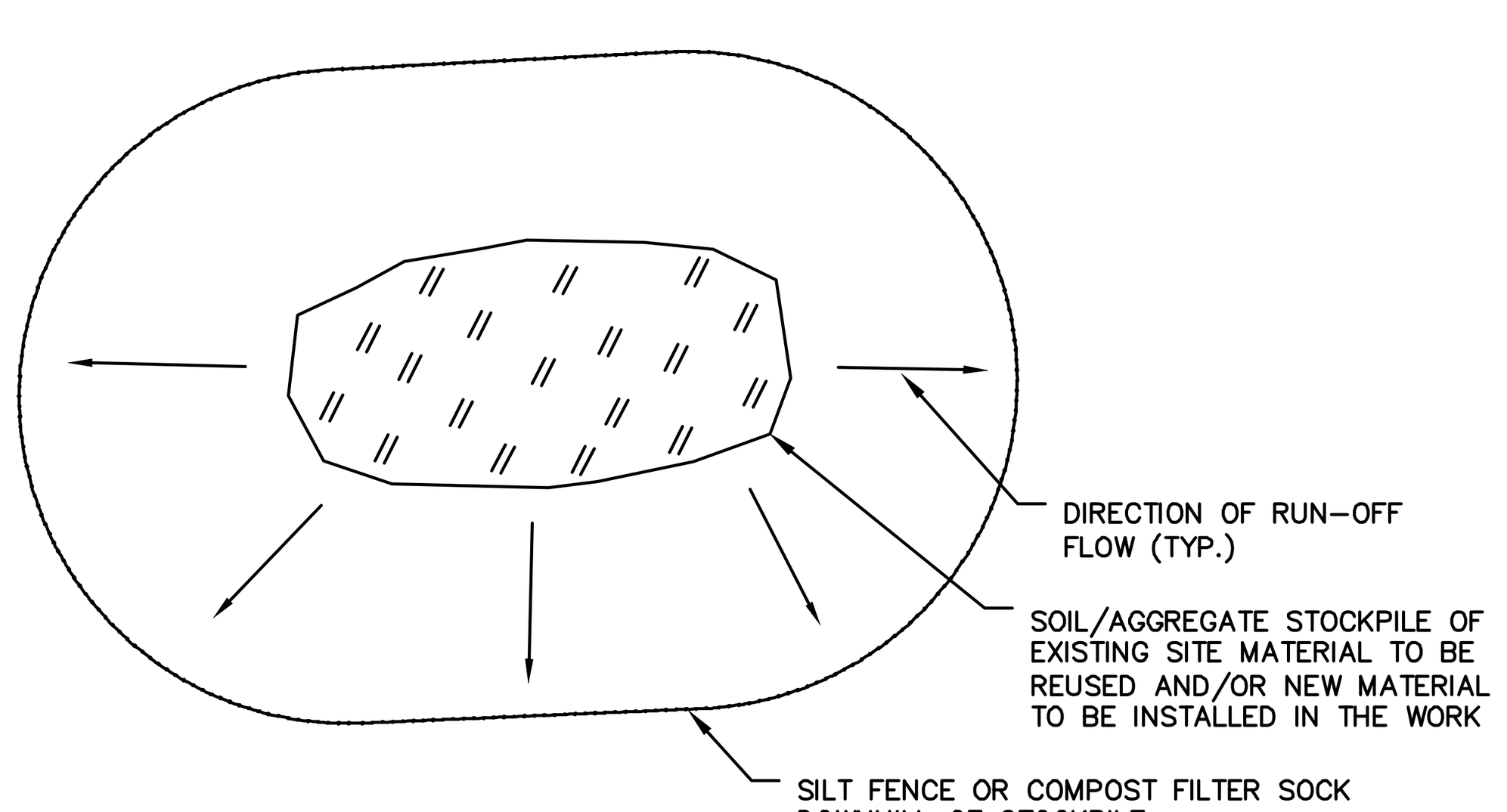

NOTES:
1. ALL EXISTING EXCAVATED MATERIAL THAT IS NOT TO BE REUSED IN THE WORK IS TO BE IMMEDIATELY REMOVED FROM THE SITE AND PROPERLY DISPOSED OF.
2. SOIL/AGGREGATE STOCKPILE SITES TO BE WHERE SHOWN ON THE DRAWINGS.
3. RESTORE STOCKPILE SITES TO PRE–EXISTING PROJECT CONDITION AND RESEED AS REQUIRED.
4. STOCKPILE HEIGHTS MUST NOT EXCEED 35'. STOCKPILE SLOPES MUST BE 2:1 OR FLATTER.

TOPSOIL STOCKPILE DETAIL

N.T.S

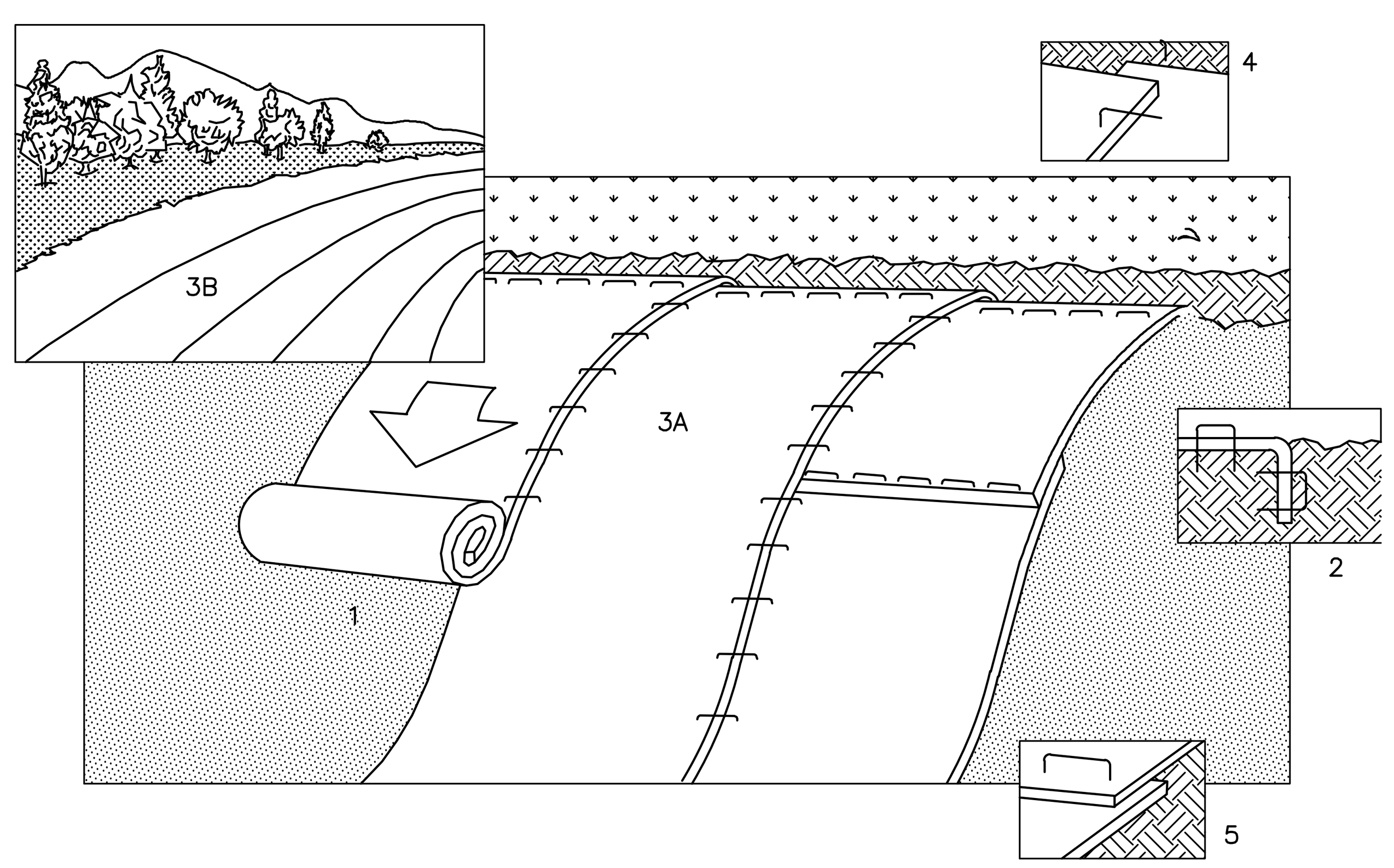

1. PREPARE SOIL BEFORE INSTALLING BLANKETS, INCLUDING APPLICATION OF LIME, FERTILIZER,AND SEED.
2. BEGIN AT THE TOP OF THE SLOPE BY ANCHORING THE BLANKET IN 6" DEEP X 6" WIDE TRENCH. BACKFILL AND COMPACT THE TRENCH AFTER STAPLING.
3. ROLL THE BLANKETS (A.) DOWN OR (B.) HORIZONTALLY ACROSS THE SLOPE.
4. THE EDGES OF PARALLEL BLANKETS MUST BE STAPLED WITH APPROXIMATELY 2" OVERLAP.
5. WHEN BLANKETS MUST BE SPLICED DOWN THE SLOPE, PLACE BLANKETS END OVER END (SHINGLE STYLE) WITH APPROXIMATELY 4" OVERLAP. STAPLE THROUGH OVERLAPPED AREA, APPROXIMATELY 12" APART.

SLOPE STABILIZATION DETAIL

N.T.S

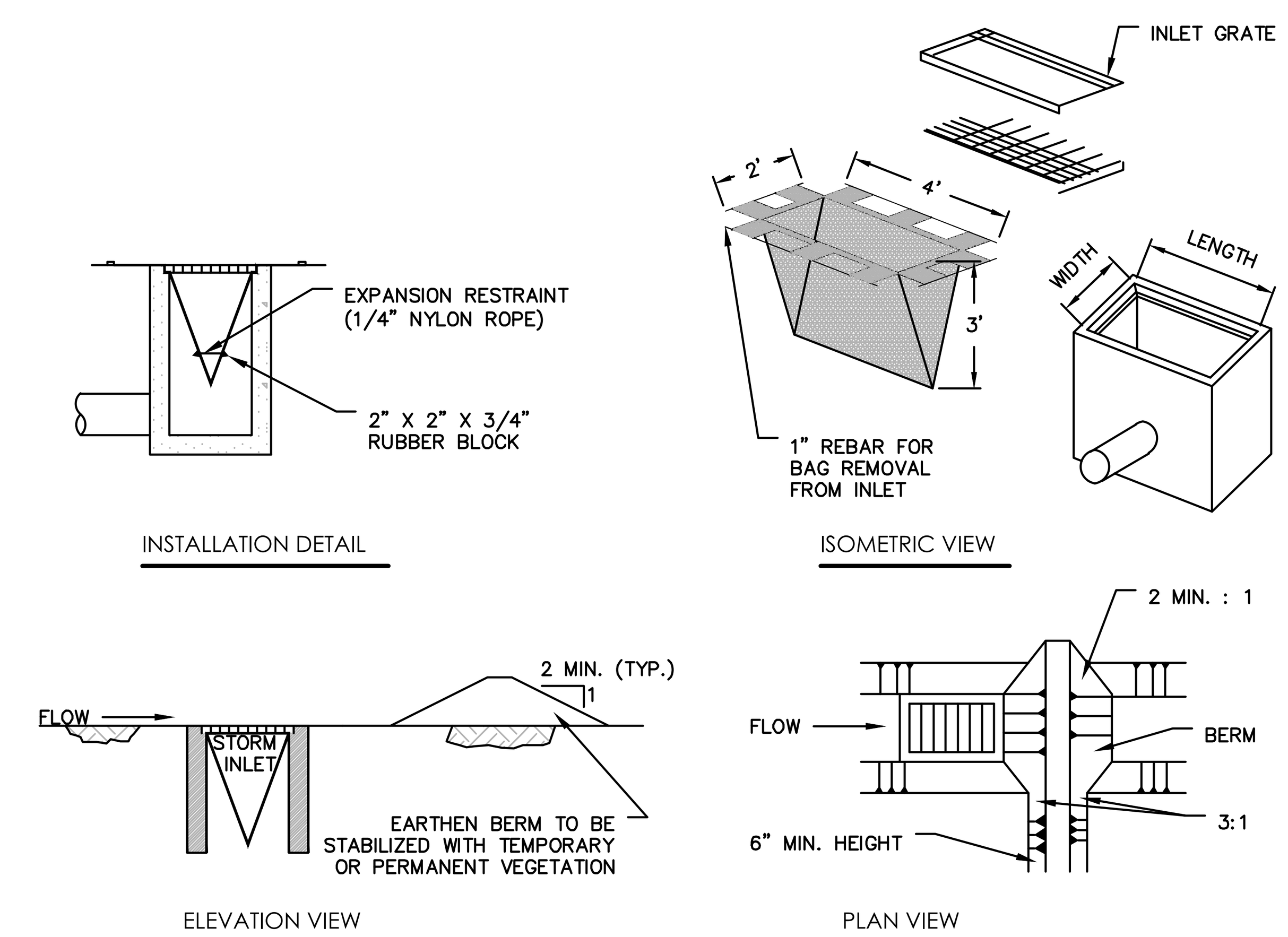

MAXIMUM DRAINAGE AREA = 1/2 ACRE.

INLET PROTECTION SHALL NOT BE REQUIRED FOR INLET TRIBUTARY TO SEDIMENT BASIN OR TRAP. BERMS SHALL BE REQUIRED FOR ALL INSTALLATIONS.

ROLLED EARTHEN BERM IN ROADWAY SHALL BE MAINTAINED UNTIL ROADWAY IS STONED. ROAD SUBBASE BERM ON ROADWAY SHALL BE MAINTAINED UNTIL ROADWAY IS PAVED. EARTHEN BERM IN CHANNEL SHALL BE MAINTAINED UNTIL PERMANENT STABILIZATION IS COMPLETED OR REMAIN PERMANENTLY.

AT A MINIMUM, THE FABRIC SHALL HAVE A MINIMUM GRAB TENSILE STRENGTH OF 120 LBS, A MINIMUM BURST STRENGTH OF 200 PSI, AND A MINIMUM TRAPEZOIDAL TEAR STRENGTH OF 50 LBS. FILTER BAGS SHALL BE CAPABLE OF TRAPPING ALL PARTICLES NOT PASSING A NO. 40 SIEVE.

INLET FILTER BAGS SHALL BE INSPECTED ON A WEEKLY BASIS AND AFTER EACH RUNOFF EVENT. BAGS SHALL BE EMPTIED AND RINSED OR REPLACED WHEN HALF FULL OR WHEN FLOW CAPACITY HAS BEEN REDUCED SO AS TO CAUSE FLOODING OR BYPASSING OF THE INLET. DAMAGED OR CLOGGED BAGS SHALL BE REPLACED. A SUPPLY SHALL BE MAINTAINED ON SITE FOR REPLACEMENT OF BAGS. ALL NEEDED REPAIRS SHALL BE INITIATED IMMEDIATELY AFTER THE INSPECTION. DISPOSE OF ACCUMULATED SEDIMENT AS WELL AS ALL USED BAGS ACCORDING TO THE PLAN NOTES.

DO NOT USE ON MAJOR PAVED ROADWAYS WHERE PONDING MAY CAUSE TRAFFIC HAZARDS.

FILTER BAG INLET PROTECTION - TYPE M INLET DETAIL

N.T.S PADEP–4–16

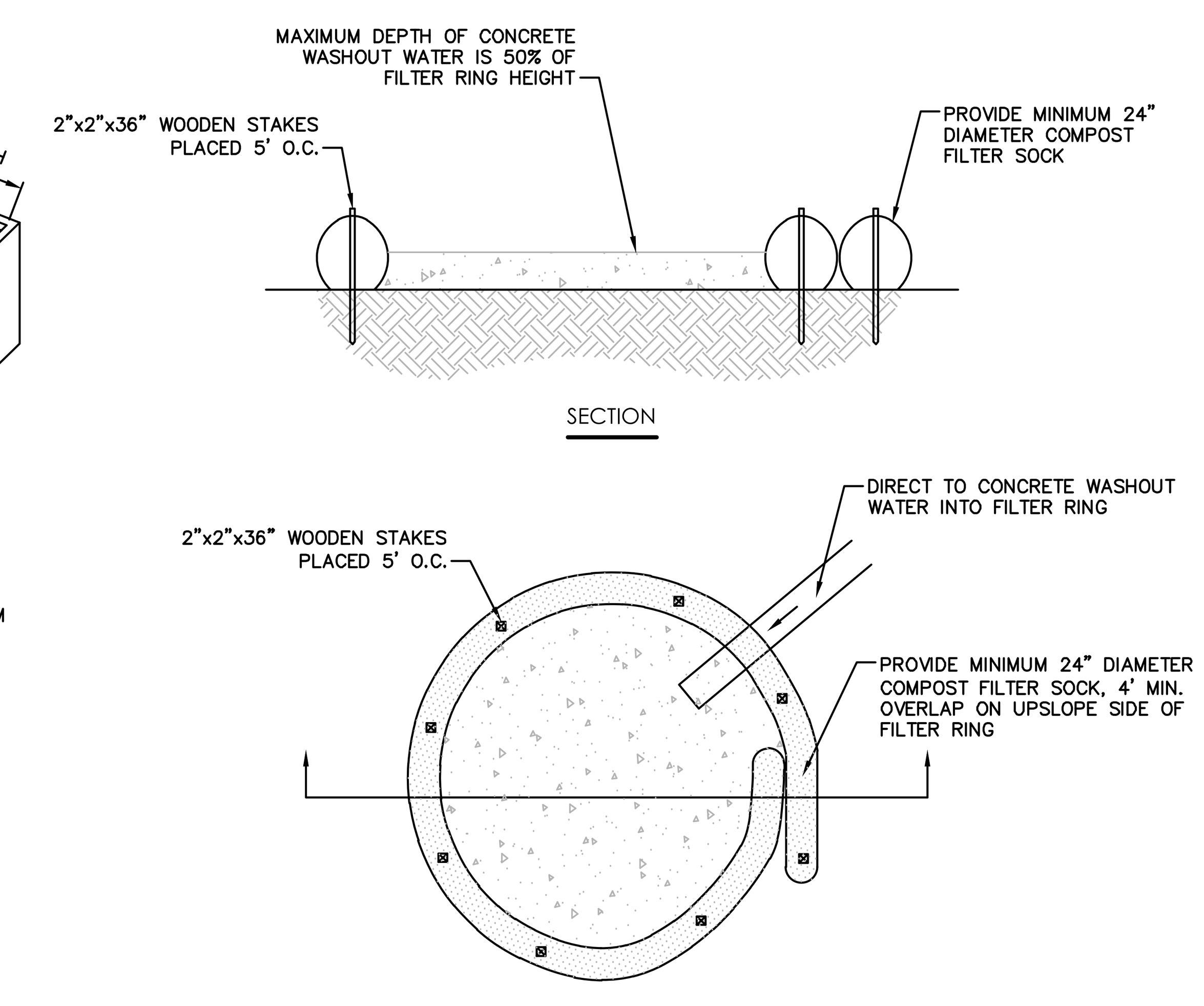

NOTES:
1. INSTALL ON FLAT GRADE FOR OPTIMUM PERFORMANCE.
2. 18" DIAMETER FILTER SOCKS MAY BE STACKED ONTO DOUBLE 24" DIAMETER SOCKS IN PYRAMIDAL CONFIGURATION FOR ADDED HEIGHT.
3. A SUITABLE IMPERVIOUS GEOMEMBRANE SHALL BE PLACED AT THE LOCATION OF THE WASHOUT PRIOR TO INSTALLING THE SOCKS.
4. ALL COMPOST SOCK WASHOUTS SHALL BE REMOVED FROM THE SITE AND THE AREA PERMANENTLY STABILIZED UPON COMPLETION OF THE JOB.

COMPOST SOCK WASHOUT

N.T.S

Architecture
Engineering
Environmental
Land Surveying
BL Companies
2601 Market Place
Suite 350
Harrisburg, PA 17110
(717) 943-1665

GENIUS KIDS CHILD DEVELOPMENT CENTER PLAY LEARN GROW

PRELIMINARY/FINAL LAND DEVELOPMENT PLAN
PROPOSED K CARE - UA (GENIUS KIDS)
OLD SCHOOLHOUSE LANE
UPPER ALLEN TOWNSHIP, CUMBERLAND COUNTY, PA

REVISIONS

No.	Date	Desc.
1	09/29/2023	PER TOWNSHIP SKETCH PLAN COMMENTS
2	01/04/2024	PER TOWNSHIP PLAN REVIEW COMMENTS
3	01/24/2024	PER TOWNSHIP PLAN REVIEW COMMENTS
4	02/12/2024	PER TOWNSHIP PLAN REVIEW COMMENTS

Designed	C.L.H.
Drawn	N.M.
Reviewed	A.J.B.
Scale	1" = 20'
Project No.	2202027
Date	07/31/23
CAD File:	DN220202701

Title
E&S DETAILS

Sheet No.
EC-3
No.19of 19

2/12/2024, CHERSHEY, G:\JOBS22\20\2202027\DWG\DN220202701.DWG,EC-3,

© 2024 BL COMPANIES, INC. THESE DRAWINGS SHALL NOT BE UTILIZED BY ANY PERSON, FIRM OR CORPORATION WITHOUT THE SPECIFIC WRITTEN PERMISSION OF BL COMPANIES.

FOR PERMITTING PURPOSES ONLY NOT RELEASED FOR CONSTRUCTION